TRELLEBORG SEALING SOLUTIONS

Hydraulic seals – linear

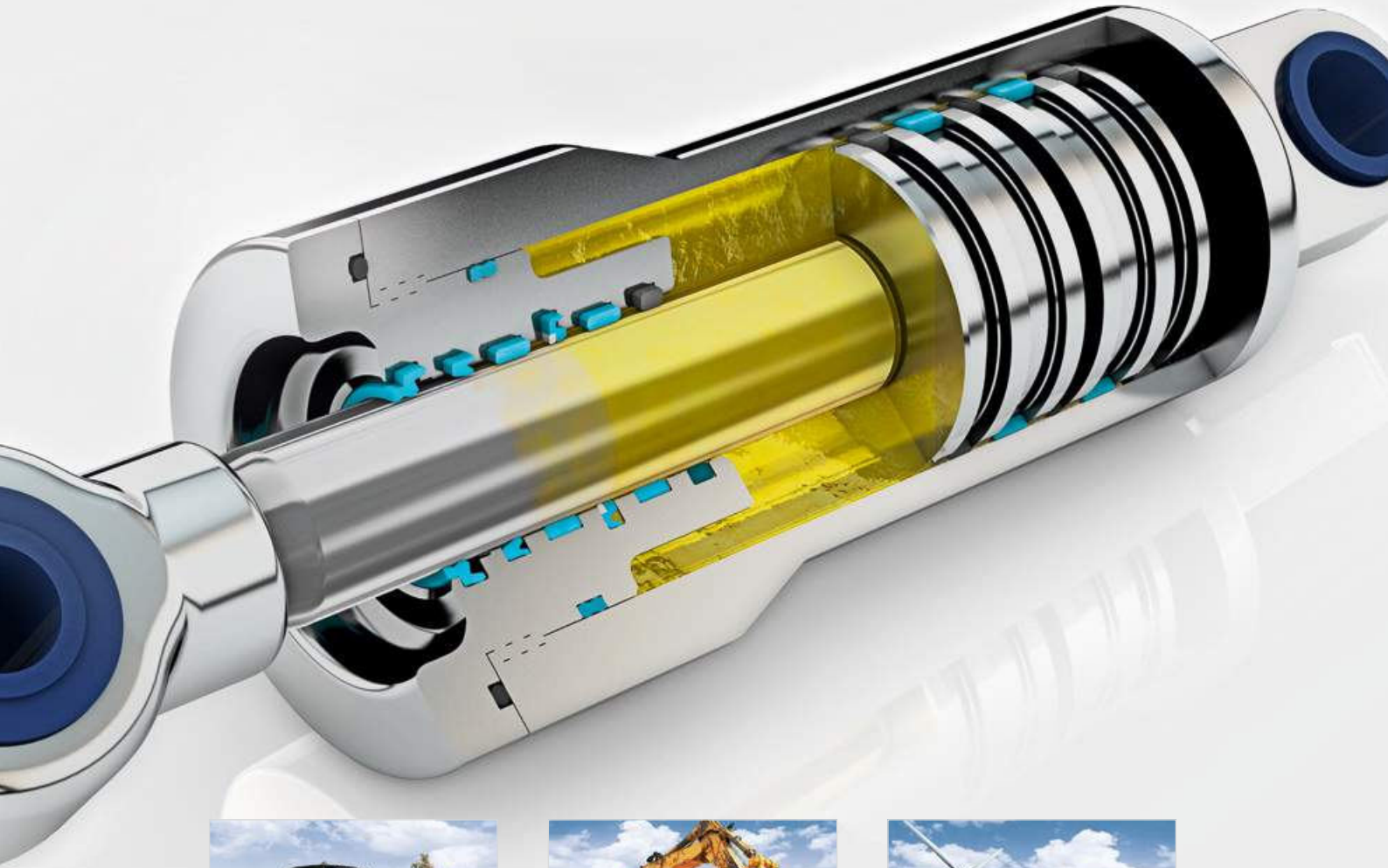

YOUR PARTNER FOR SEALING TECHNOLOGY

Your Partner for Sealing Technology

Trelleborg Sealing Solutions is a major international developer, manufacturer and supplier of seals, bearings and molded components in polymers. We are uniquely placed to offer dedicated design and development from our market-leading product and material portfolio: a one-stop-shop providing the best in elastomer, silicone, thermoplastic, PTFE and composite technologies for applications in aerospace, industrial and automotive industries.

With 50 years of experience, Trelleborg Sealing Solutions engineers support customers with design, prototyping, production, test and installation using state-of-the-art design tools. An international network of over 70 facilities worldwide includes over 20 manufacturing sites, strategically-positioned research and development centers, including materials and development laboratories and locations specializing in design and applications.

Developing and formulating materials in-house, we utilize the resource of our material database, including over 2,000 proprietary compounds and a range of unique products. Trelleborg Sealing Solutions fulfills challenging service requirements, supplying standard parts in volume or a single custom-manufactured component, through our integrated logistical support, which effectively delivers over 40,000 sealing products to customers worldwide.

Facilities are certified to ISO 9001:2008 and ISO/TS 16949:2009. Trelleborg Sealing Solutions is backed by the experience and resources of Trelleborg Group, one of the world's foremost experts in polymer technology.

ISO 9001:2008 **ISO/TS 16949:2009**

The information in this brochure is intended to be for general reference purposes only and is not intended to be a specific recommendation for any individual application. The application limits for pressure, temperature, speed and media given are maximum values determined in laboratory conditions. In application, due to the interaction of operating parameters, maximum values may not be achieved. It is vital therefore, that customers satisfy themselves as to the suitability of product and material for each of their individual applications. Any reliance on information is therefore at the user's own risk. In no event will Trelleborg Sealing Solutions be liable for any loss, damage, claim or expense directly or indirectly arising or resulting from the use of any information provided in this brochure. While every effort is made to ensure the accuracy of information contained herewith, Trelleborg Sealing Solutions cannot warrant the accuracy or completeness of information.

To obtain the best recommendation for a specific application, please contact your local Trelleborg Sealing Solutions marketing company.
This edition supersedes all previous brochures. This brochure or any part of it may not be reproduced without permission.

® All trademarks are the property of Trelleborg Group. The turquoise color is a registered trademark of Trelleborg Group. © 2017, Trelleborg Group. All rights reserved.

Linear Seals

Contents

Introduction

Rod Seals

Piston Seals

Scrapers

Slydring® - Wear Rings

Introduction

Your Partner for Sealing Technology

"We build long term partnerships with customers and suppliers by providing leading technology and excellent service."

OUR MISSION

We will be the supply partner of first choice within our chosen markets, working globally through our local teams. We will build long-term partnerships with customers and suppliers by providing leading technology and excellent service.
We are determined to be different.

SEALING TECHNOLOGY

Trelleborg Sealing Solutions offers an outstandingly comprehensive sealing portfolio – a one-stop-shop providing the best in elastomer, silicone, thermoplastic, PTFE and composite technologies; our solutions are featured in virtually every application conceivable within the aerospace, industrial and automotive industries.

A WORLDWIDE PRESENCE

We are uniquely placed to offer a dedicated design and development service for sealing solutions, globally servicing, supporting and supplying our customers through an unrivaled international network.

- Over 80 facilities worldwide
- More than 20 manufacturing sites
- Seven strategically positioned material and development laboratories
- Internationally linked design and application centers

COMMITMENT – TO CUSTOMERS' NEEDS LONG-TERM

The aim of Trelleborg Sealing Solutions is to facilitate customers in achieving cost-effective, durable solutions that match their specific business requirements and needs. We are one of the world's foremost experts in polymer sealing technology.
We develop, manufacture and supply safety-critical polymer-based precision seals, bearings and molded components.

THE TRELLEBORG GROUP

Trelleborg Coated Systems
Leading global supplier of unique customer solutions for polymer-coated fabrics deployed in a variety of industrial applications.

Trelleborg Industrial Solutions
Market leader in such industrial application areas as hose systems, industrial antivibration solutions and selected industrial sealing systems.

Trelleborg Offshore & Construction
Leading global supplier of polymer-based critical solutions for deployment in highly demanding environments.

Trelleborg Wheel Systems
Trelleborg Wheel Systems is a leading global supplier of tires and complete wheels for agricultural and forestry machines, materials handling and construction vehicles, and two-wheeled vehicles.

Trelleborg Sealing Solutions
One of the world's leading developers, manufacturers and suppliers of precision seals. It supports its aerospace, industrial and automotive customers through over 20 production facilities and more than 50 marketing companies globally.

Trelleborg Sealing Solutions Key Industries

Aerospace

Automotive

Machine Tools & Fluid Power

Agriculture and Construction Vehicles

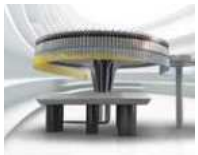
Food & Beverage, Chemical Processing

Life Sciences and Pharmaceutical

Oil & Gas

Mining

Alternative Energy

Marine

Sanitary and Heating

Semiconductor

Our Global Resources

Americas

- 1 R&D Center
- 14 Marketing Companies
- 1 Logistics Center SCM
- 9 Manufacturing Sites
- Damping Solutions
- 2 Automotive Hubs
- 4 Aerospace Hubs

TRELLEBORG

9	Research & Development Centers
53	Marketing Companies
4	Logistics Centers
26	Manufacturing Sites
	Damping Solutions
5	Automotive Hubs
8	Aerospace Hubs

5,300
employees

82
worldwide locations

More than
2,000
proprietary material formulations

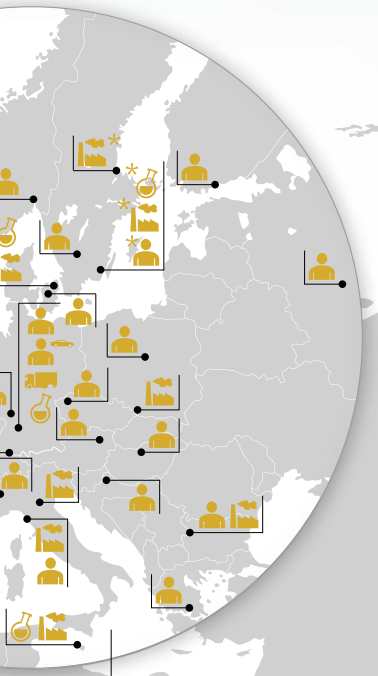

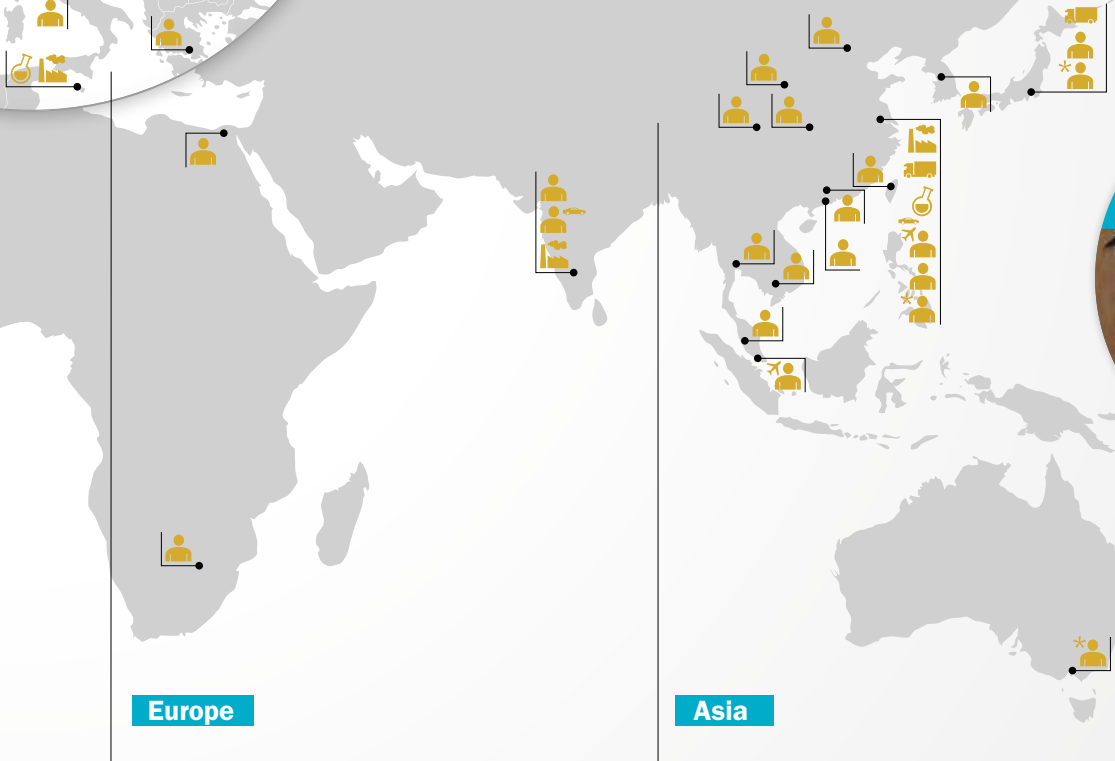

Europe

- 7 R&D Centers
- 22 Marketing Companies
- 1 Logistics Center SCM
- 15 Manufacturing Sites
- Damping Solutions
- 1 Automotive Hub
- 2 Aerospace Hubs

Asia

- 1 R&D Center
- 17 Marketing Companies
- 2 Logistics Centers SCM
- 2 Manufacturing Sites
- Damping Solutions
- 2 Automotive Hubs
- 2 Aerospace Hubs

Products, Brands and Materials

Decades of experience designing and manufacturing polymer solutions has led Trelleborg Sealing Solutions to develop, manufacture and supply a range of unique materials and proprietary product designs, many of which have become industry standards. Development is ongoing, ensuring that our solutions meet the changing needs of our customers, as well as the latest industry trends and regulations.

WORLD RENOWNED NAMES UNITED

We own many of the longest established and leading names within the seal industry. These include:

- **American Variseal**
- **Busak+Shamban**
- **Dowty Seals**
- **Chase Walton**
- **Forsheda**
- **GNL**
- **Impervia**
- **Nordex**
- **Orkot**
- **Palmer Chenard**
- **Polypac**
- **SSF**
- **SF Medical**
- **Shamban**
- **Silcofab**
- **Silcotech**
- **Skega**
- **Stefa**
- **Wills**

PROPRIETARY MATERIALS

Ongoing development has yielded some of the most successful sealing and bearing materials available.

- **HiMod®**
- **Isolast®**
- **Orkot®**
- **Turcite®**
- **Turcon®**
- **Turel®**
- **Zurcon®**

OUR PIONEERING PRODUCTS

Trelleborg Sealing Solutions is pioneering and is continuously developing innovative products.

- **Turcon® AQ Seal®**
- **D-A-S Compact Seal®**
- **Turcon® Double Delta®**
- **Turcon® Excluder®**
- **Turcon® Glyd Ring® T**
- **Turcon® Hatseal**
- **Zurcon® L-Cup®**
- **Turcite® Slydring®**
- **Turcite® B-Slydway®**
- **Turcon® Stepseal® 2K**
- **Turcon® Stepseal® V**
- **V-Ring®**
- **Turcon® Varilip® PDR**
- **Turcon® Variseal®**
- **Turcon® VL Seal®**
- **Turcon® Wedgpak®**
- **Wills Rings®**
- **Zurcon® Wynseal**

To design a solution for your specific needs, contact your local Trelleborg Sealing Solutions marketing company.

Films and Animations

SEEING IS BELIEVING

Complex sealing configurations can feature a large number of sealing elements. Trying to illustrate these on a 2-D page is difficult and can never properly show their function or characteristics. Trelleborg Sealing Solutions turned to the latest graphic technologies to produce 3-D animations of applications and typical sealing solutions for them.

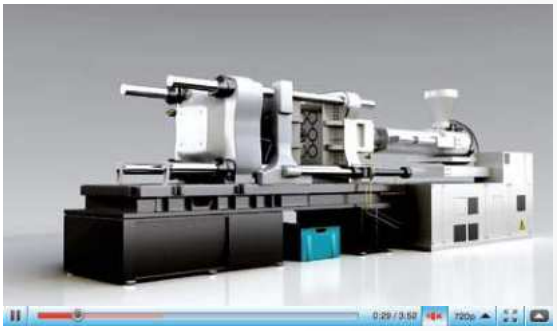

View at
YouTube.com/ trelleborgseals

View at
tss.trelleborg.com/ films

Online 24-7
A range of films specific to different industries and products are available to view on the Trelleborg Sealing Solutions website or via YouTube.

Turcon® Roto L
Energy saving with no friction

Digital Services

ONLINE TOOLS MAKE LIFE EASIER

Trelleborg Sealing Solutions has developed a number of online tools that make the working life of an engineer specifying seals easier. All these industry-leading tools are available free-of-charge from the Trelleborg Sealing Solutions website at www.tss.trelleborg.com. To use these advanced services all you have to do is register on the Members Area.

There is also a continually increasing range of innovative engineering apps available for smartphones, both for iOS and Android devices. Just search for "Trelleborg" in the App Store or GooglePlay to find the tools to optimize your daily productivity.

Materials Search and Chemical Compatibility Check

These two programs allow you to find out the compatibility of sealing materials to hundreds of different media and help identify the most suitable material for your application.

- Very good suitability
- Good suitability
- Limited suitability
- Unsuitable
- Insufficient information

O-Ring Calculator

An industry-leading tool, the easy to use O-Ring calculator includes sizing capabilities, compression forces, design parameter recommendations and complete measurements.Results and comments may be printed, shared or filed as PDF.

Versatile CAD Service

The CAD download facility provides thousands of drawings of a wide range of seals. It gives the option of 2- or 3-dimensional files in a range of formats to suit most commonly used CAD systems.

Sealing Solutions Configurator

The Sealing Solutions Configurator is the first tool of its kind offered by any seal supplier. It allows engineers to identify a proven sealing solution for their specific application in just four easy steps.

Powerful Electronic Catalog

Search through over 100,000 seals by item number or their properties and access comprehensive and detailed information plus an interactive quote facility.

E-Learning on sealing technology

Trelleborg Sealing Solutions has a number of e-Learning modules available on several aspects of sealing technology.

For more information
www.tss.trelleborg.com

Mobile Apps and Services

We understand the needs of engineers on the go. Check out our latest mobile tools and apps, ranging from an O-Ring calculator to unit and hardness converters. Just search for "Trelleborg" in the App Store or Google Play to find the tools to optimize your daily productivity.

ISO Fits & Tolerances App

Simply enter the nominal diameter and select the tolerance classes for bore and shaft to find the complete ISO fits definition with all relevant values including type of fit, with handy graphs to illustrate the classes by bore and shaft.

Technical Glossary App

This app provides definitions of more than 2,000 terms from the world of sealing technology and engineering.

Aerospace Groove Selector App

This app covers two of the most important SAE aerospace groove standards for hydraulic systems, AS4716 Rev B and AS5857 Rev A, making it really easy to find the size of grooves and hardware needed.

Installation Instructions App

Videos demonstrate the best practice methods for installing seals, providing all relevant documentation within the interface, guiding you to a successful installation of Radial Oil Seals and Turcon® and Zurcon® rod and piston seals.

Unit & Hardness Converter App

Intuitive and very easy to use, simply select the dimension and enter the value for conversion. The app offers a wide range of engineering and scientific units for each dimension.

For more information
www.tss.trelleborg.com

***in the groove* app**
Our in the groove magazine provides news, technical and product information on seals, as well as insights into the markets they are used in. The magazine is also available in print and as an interactive PDF.

Android App on
Google Play

Available on the
APP STORE

MANY MORE APPS available

O-Ring Calculator App
When a user enters installation specifications into the O-Ring Calculator app, such as the bore or rod/shaft diameter, the app quickly calculates O-Ring and housing dimensions in both metric and inch.

Hydraulic Cylinder Calculator
Quickly calculate areas and volumes in cylinders, extraction and retraction forces, time velocity and outflow by entering the requisite dimensions and parameters of the cylinder. In compliance with ISO 3320, ISO 3321 and ISO 4393.

Tubing and Hose App
Developed specially for life sciences engineers, this app helps you to easily choose the correct tubing and hose based on material, pressure and dimensions, removing the need to search through catalogs.

Material Compability App
Cross reference a wide variety of different materials with chemical environments to find the most effective compounds for your application. Select up to 20 materials at once to produce an easy to read compatibility chart with recommendations for use.

Rod Seals

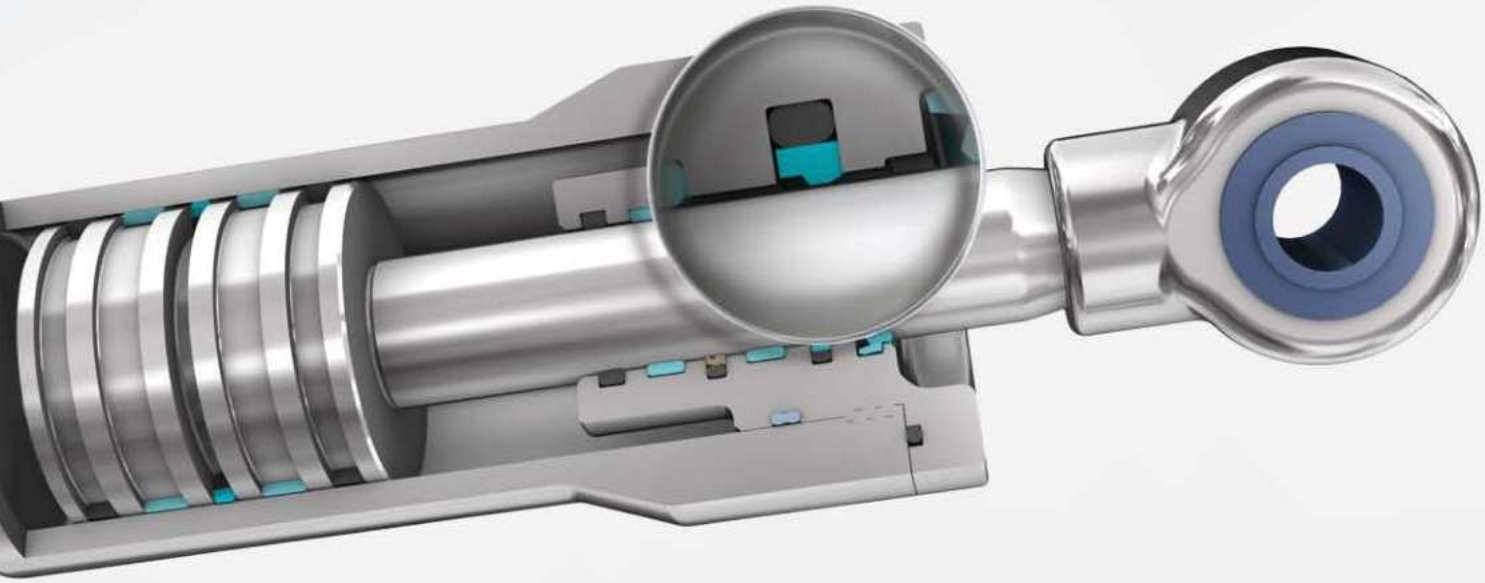

Contents

23	Choice of Sealing Element
29	Design Instructions
31	Installation Instructions
36	Quality Criteria
36	Storage Instructions
39	Turcon® Stepseal® 2K
53	Turcon® Stepseal® V
65	Zurcon® Rimseal
73	POLYPAC® - Veepac CH
85	POLYPAC® - Veepac CH/G5
91	POLYPAC® - Selemaster SM
97	POLYPAC® - Balsele
113	Zurcon® L-Cup®
121	Zurcon® U-Cup, Type RU2
127	Zurcon® U-Cup, Type RU6
133	Zurcon® U-Cup, Type RU9
143	Zurcon® Buffer Seal
151	Turcon® Variseal® M2
161	Turcon® VL Seal®
173	Turcon® Glyd Ring®
183	Turcon® Glyd Ring® T
193	Turcon® Glyd Ring® Hz
205	Turcon® AQ-Seal® with Bean Seal
215	Turcon® AQ-Seal® 5 with Bean Seal
223	Zurcon® Wynseal M
233	Turcon® Double Delta®
243	Additional Seals

Choice of Sealing Element

Sealing elements have a decisive influence on the design, function and service life of hydraulic and pneumatic cylinders and systems.

This applies equally to the piston rod seals where leak tightness, resistance to wear and gap extrusion, resistance to process media, resistance to high and low temperatures, low friction, compact form and simple installation are demanded in order to meet the requirements of industry for a functional sealing solution.

Trelleborg Sealing Solutions has developed a complete range of seals which, due to their optimized geometries, designs and use of high-quality materials such as Turcon® and Zurcon® , satisfy the technical and economic demands of the industry.

In order to select the most appropriate seal type and material, it is necessary to first define all the desired functional parameters. Table 1 can then be used to make an initial selection of seals and materials according to the specific requirements of the application.

The second column of the table contains the number of the page on which further general information, together with specific design and installation instructions on the particular seal type and materials (or material combinations with multi-element seals, e.g. Turcon® Stepseal® 2K), can be found.

Furthermore, on page 30 attention is drawn to the quality of the mating surface. We recommend that the limits specified there be observed, as they have a decisive influence on the functionality and service life of the system.

The final choice of seal type and material must also take account of the detailed information on the seal elements.

Please do not hesitate to contact your local Trelleborg Sealing Solutions marketing company for further information on specific applications and special technical questions.

NOTE ON ORDERING

All multi-element standard rod seals, e.g. Turcon® Stepseal® 2K, are generally supplied as complete seal sets. The sets include the seal and matching elastomer energizing elements. The O-Ring does not have to be ordered separately. It is also possible to use other O-Ring materials from our O-Ring catalog. In this case, please order the seal ring and O-Ring separately.

When ordering the seal ring separately, it is then not necessary to mention the "O-Ring material code" in the TSS Article No. shown in the ordering examples.

Older designs of seals no longer contained in this catalog naturally continue to be available (see chapter "Additional Seals"). For all new applications, however, we recommend the use of the seal types and preferred sizes (ISO series, wherever possible) listed in this catalog.

Other combinations of Turcon® materials and special designs can be developed and supplied for special applications in all sizes up to 2600 mm diameter, provided there is sufficient demand.

The sizes contained in this catalog are mostly available from stock or can be supplied at short notice. We reserve the right to modify our supply program.

Table 1: Selection Criteria for Rod Seals

Seal		Application				Standard	Size Range	Ac-tion		Technical Data*			Recom-mended Seal Material
										Temp. Range **	Speed	Pressure	
		Field of Application											
Type	Page		Light	Medium	Heavy	ISO	mm	Single	Double	°C	m/s	MPa max.	
Turcon® Stepseal® 2K	39	Mobile hydraulics	•	•	•	7425-2	3-2600	•		-45/ +200	15	50	M12
		Standard cylinders	•	•	•								
		Machine tools	•	•	•							50	T46
		Injection molding machines	•	•	•								
		Presses	•	•	•							20	T05
		Automotive industry	•	•	•								
		Hydraulic hammers	•	•	•		3-2200			-45/ +110	2	60	Z51
		Servo hydraulics	•	•	•								
Turcon® Stepseal® V	53	Mobile hydraulics	•	•	•	7425-2	19-2600	•		-45/ +200	15	50	M12
		Construction equipment	•	•	•								
		Presses	•	•	•							50	T46
		Injection molding machines	•	•	•								
Zurcon® Rimseal	65	Mobile hydraulics	•	•	•	7425-2	8-2200	•		-45/ +110	In tandem with Turcon® Stepseal® 2K 5m/s	In tandem 60 MPa As single seal 25 MPa	Z52
		Standard cylinders	•	•	•								
		Machine tools	•	•	•								
		Injection molding machines	•	•	•								
		Presses	•	•	•								
Veepac CH	73	Presses	•	•	•	-	10-750	•		-30/ +130	0.5	40	Rubber fabric reinforced + POM
		Steel mills	•	•	•								
		Ship hydraulics	•	•	•								
		Scrape shears	•	•	•								
		Civil engineering	•	•	•								
		Continuous casting	•	•	•								
		Special hydraulic cylinders	•	•	•								
		Water locks	•	•	•								
Veepac CH/ G5	85	Hydraulic cylinders		•	•	-	25-160	•		-30/ +130	0.5	40	Rubber fabric reinforced + POM
		Presses		•	•								
		Mining		•	•								
		Steel mills		•	•								
		Water locks		•	•								

* The data below are maximum values and cannot be used at the same time. The maximum pressure depends on temperature and gap dimension.
** Temperature range depends on choice of elastomer material and media.

Seal		Application				Standard	Size Range	Ac-tion		Technical Data*			Recom-mended Seal Material
										Temp. Range **	Speed	Pressure	
Type	Page	Field of Application	Light	Medium	Heavy	ISO	mm	Single	Double	°C	m/s	MPa max.	
Selemaster SM	91	Hydraulic cylinders		•	•	-	15-335	•		-40/ +130	0.5	70	Rubber fabric reinforced + POM
		Presses		•	•								
		Mining		•	•								
		Steel mills		•	•								
		Water locks		•	•								
Balsele	97	Hydraulic cylinders	•	•		5597/1	10-1200	•		-30/ +130	0.5	25 With Back-Up 40	Rubber fabric reinforced NBR
		Presses	•	•									
		Truck cranes	•	•									
Zurcon® L-Cup®	113	Hydraulic cylinders	•	•		5597/1	6-250	•		-50/ +130	0.5	40	Z20 Z22 Z25
		Tail lift cylinders	•	•									
		Steering cylinders	•	•									
Zurcon® U-Cup RU2	121	Hydraulic cylinders	•	•		5597/1	6-185	•		-50/ +110	0.5	40	Z20 Z22
		Telescopic cylinders	•	•									
		Mobile hydraulics	•	•									
Zurcon® U-Cup RU6	127	Hydraulic cylinders	•	•		7425-2	12-350	•		-35/ +110	0.5	25	Z20
		Industrial hydraulics	•	•									
		Mobile hydraulics	•	•									
Zurcon® U-Cup RU9	133	Hydraulic cylinders	•	•		5597/1	6-140	•		-50/ +130	0.5	40	Z20 Z22 Z25
		Industrial hydraulics	•	•									
		Mobile hydraulics	•	•									
Zurcon® Buffer Seal	143	Earthmoving Equipment		•	•	7425-2	40-140	•		-35/ +110	1	40 60 (peak)	Z20
		Mobile hydraulics		•	•								
		Construction Machinery		•	•								

* The data below are maximum values and cannot be used at the same time. The maximum pressure depends on temperature and gap dimension.
** Temperature range depends on choice of elastomer material and media.

Seal		Application				Standard	Size Range	Ac-tion		Technical Data*			Recom-mended Seal Material
										Temp. Range **	Speed	Pressure	
		Field of Application											
Type	Page		Light	Medium	Heavy	ISO	mm	Single	Double	°C	m/s	MPa max.	
Turcon® Variseal® M2	151	High and low temperatures	•	•		AS4716	3-2600	•		-70/ +300	15	40	T40
		Aggressive media	•	•								20	T05
		Food-contact	•	•									
Turcon® VL Seal®	161	Automation	•	•	•	-	3-2600	•		-45/ +200	15	50	M12
		Telescopic cylinders	•	•	•							50	T46
		Valve stems	•	•	•		3-2200			45/+110	2	25	Z52
		Down-hole tools	•	•	•								
Turcon® Glyd Ring®	173	Special cylinders	•	•	•	7425-2	3-2600		•	-45/ +200	15	50	M12
		Pumps and valves	•	•	•							50	T46
		Machine tools	•	•	•							20	T05
		Servo equipment	•	•	•		3-2200			-45/ +110	2	60	Z51
Turcon® Glyd Ring® T	183	Special cylinders	•	•	•	7425-2	3-2600		•	-45/ +200	15	50	M12
		Pumps and valves	•	•	•								
		Machine tools	•	•	•							50	T46
		Robotics/ manipulators	•	•	•								
		Presses	•	•	•		3-2200			-45/ +110	2	60	Z51
Turcon® Glyd Ring® Hz	193	Machine tools	•	•		7425-2	8-999	•	•	-45/ +200	15	30	M12
		Handling machinery	•	•								25	T40
		Servo equipment	•	•						-45/+80	2	30	Z80
Turcon® AQ-Seal® with Bean Seal	205	Hydraulics	•	•		7425-2	18-2200		•	-45/ +110	2	40	M12
		Machine operation	•	•									
		Fluid/gas separation	•	•								40	T46
		Holding cylinders	•	•									

* The data below are maximum values and cannot be used at the same time. The maximum pressure depends on temperature and gap dimension.
** Temperature range depends on choice of elastomer material and media.

Seal		Application				Standard	Size Range	Ac-tion		Technical Data*			Recom-mended Seal Material
										Temp. Range **	Speed	Pressure	
Type	Page	Field of Application	Light	Medium	Heavy	ISO	mm	Single	Double	°C	m/s	MPa max.	
Turcon® AQ-Seal® 5 with Bean Seal	215	Hydraulics		•	•	-	32-2200		•	-45/ +110	2	50	M12
		Fluid/gas separation		•	•								
		Mobile hydraulics		•	•								
		Holding cylinders		•	•							50	T46
Zurcon® Wynseal M	223	Industrial hydraulics	•	•		7425-2	3-2600		•	-45/ +200	10	35	M12
		Handling machinery	•	•			3-2200			-45/ +110	0.5	25	Z52
		Agricultural equipment	•	•								45	Z51
Turcon® Double Delta®	233	Valve stems	•	•		-	3-2600		•	-45/ +200	15	20	T05
		Mini hydraulics	•	•								35	M12
		Hydraulic tools	•	•								35	T46

* The data below are maximum values and cannot be used at the same time. The maximum pressure depends on temperature and gap dimension.
** Temperature range depends on choice of elastomer material and media.

REDUNDANT SEALING SYSTEM

Sealing of environmentally harmful fluids has led Trelleborg Sealing Solutions to develop innovative sealing systems that meet the demanding industry specifications for leak-free performance and long service life.

In heavy-duty applications, these characteristics cannot be assured by a single sealing element; therefore, specially developed system seals are arranged in series, building a tandem arrangement.

Each sealing element in a system has its specific function and their interaction needs to be secured to get a redundant sealing system.

The primary seal, manufactured from proprietary Turcon® PTFE-based materials, generates low friction and demonstrates excellent wear and extrusion resistance under extreme working conditions. It allows a fine lubrication film to pass this first barrier, ensuring the necessary lubrication of the secondary sealing element, giving long service life.

The tandem arrangement requires the primary seal to have an outstanding backpumping ability. If a double acting scraper is installed, the secondary seal must also possess back-pumping capabilities. A combination of different sealing materials in a system, such as a Turcon® PTFE and a Zurcon® polyurethane, ensures the best sealing performance.

Trelleborg Sealing Solutions has pioneered work in this area and continues development of redundant sealing today.

Trelleborg Sealing Solutions has successfully used the Turcon® Stepseal® 2K in tandem arrangement for heavy-duty applications. A tandem sealing system can also be created by using other seals, such as Zurcon® Rimseal, Zurcon® L-Cup® or Zurcon® U-Cup as secondary sealing elements. Depending on the type of secondary seal, a single- or double-acting scraper can be used to completes the system, offering the highest possible operation reliability, ensuring both adequate lubrication of the sealing system and long service life.

Figure 1 shows an example of a redundant sealing system consisting of Turcon® Stepseal® 2K, Zurcon® Rimseal and Rod Scraper DA 22 with corresponding wear ring arrangement.

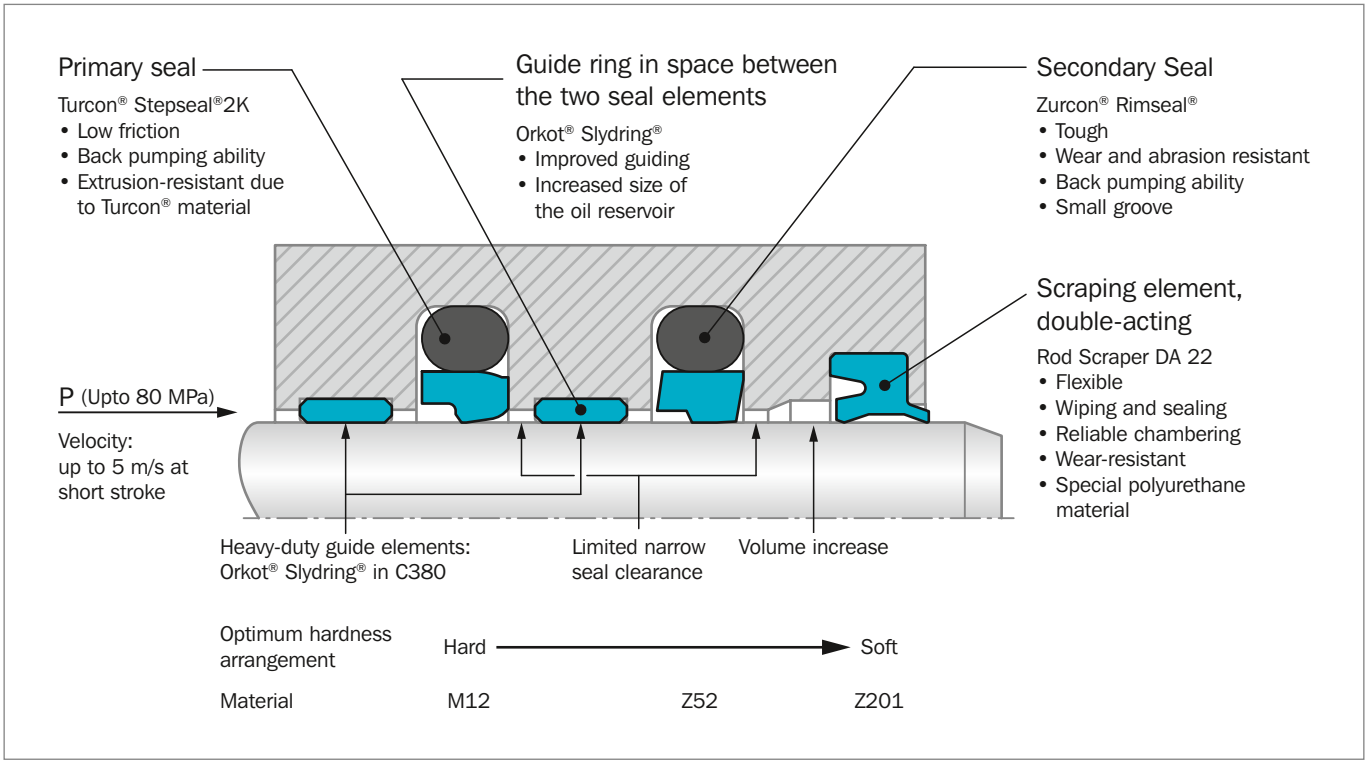

Figure 1: Example of a Redundant Modular Sealing System

Design Instructions

LEAD-IN CHAMFERS

In order to avoid damage to the rod seal during installation, lead-in chamfers and rounded edges must be provided on the piston rods, see Figure 2. If this is not possible for design reasons, a separate installation tool must be used.

The minimum length of the lead-in chamfer Z_{min} depends on the profile size of the seal and can be seen from the following tables.

Generally Z_{min} from Table 2, Table 3 and Table 4 is recommended but at 15° Z must also exceed 2.5% of the rod diameter d_N (relevant for large diameter rods). At 20° Z is calculated correspondingly.

The rod should have a lead-in chamfer of 15° to 20° by Z length minimum to gently guide the seal assembly into the hardware as shown in Figure 2. The chamfer should clear the seal assembly - in a free condition - after the seal has been calibrated.

Table 2: Elastomer Energized Seals

Minimum chamfer for a calibrated seal.

Groove Width L_1*	Lead-in Chamfer Length Z_{min}	
	15°	20°
2.2	2.5	2.0
3.2	3.0	2.5
4.2	3.5	3.0
6.3	5.0	4.0
8.1	6.5	5.0
9.5	7.5	5.5
13.8	10.5	8.0

* The groove width can be found in the table Installation Dimensions for Turcon® Glyd Ring® , Glyd Ring® T, Glyd Ring® Hz, AQ-Seal® Stepseal® 2K, Stepseal® V and Zurcon® Wynseal M.

Table 3: Double Delta®

Minimum chamfer for a calibrated seal.

O-Ring Cross Section** d_2		Lead-in Chamfer* Length Z_{min}	
		15°	20°
1.78	-	2.5	2.0
2.40	2.62	3.0	2.5
3.00	3.53	3.5	3.0
5.33	5.70	5.0	4.0
7.00	-	6.5	5.0
8.40	-	7.5	5.5

* Though not less than 2.5% of rod diameter.
**The O-Ring cross section d_2 can be found in the Installation Dimensions table from the Double Delta® chapter.

Table 4: U-Cup and Variseal®

Minimum chamfer for a calibrated seal (Variseal®)

U-Cup Groove Depth*	Variseal® M2 Series	Lead-in Chamfer Length Z_{min}	
		15°	20°
3.0 / 3.5 / 4.0		2.5	1.5
5.0		2.5	1.5
6.0 / 6.5		3.0	2.0
7.5 / 8.0	RVA0	4.5	3.0
10.0	RVA1 / RVA2	5.0	4.0
12.5		6.5	6.0
15.0	RVA3	7.5	6.5
20.0		10.0	8.5
	RVA4	12.0	9.0
	RVA5	17.0	13.0

* The groove depth is calculated from: $(d_1-d)/2$. The dimensions for d_1 and d can be found in the Installation Dimensions tables.

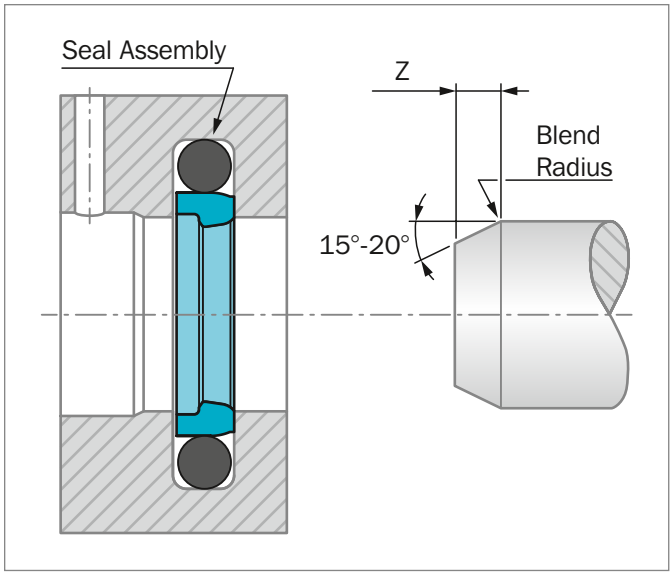

Figure 2: Lead-in chamfers

DISTANCE BETWEEN GROOVES

When installing tandem seal arrangements or double-acting scraper seals in conjunction with rod seals with back-pumping effects such as Turcon® Stepseal® 2K and Zurcon® Rimseal, we recommend the following arrangement:

- Distance between seal grooves and/or scraper seal groove L = at least groove depth X
- Oil reservoir for collecting the returning oil as shown in Figure 3.

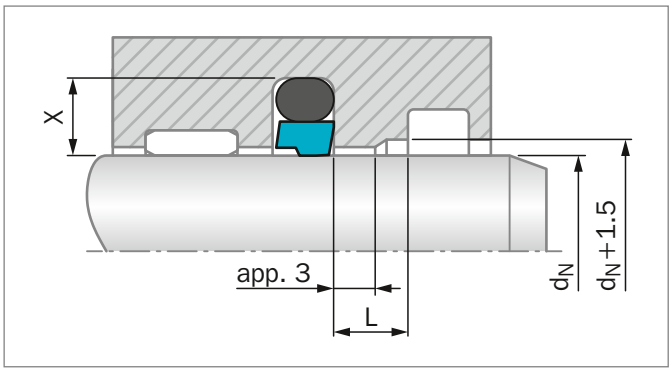

Figure 3: Recommendation for groove spacings between grooves

SURFACE ROUGHNESS DIN EN ISO 4287

The functional reliability and service life of a sealing system is dependent upon the quality and surface finish of the mating surface to be sealed.

Scores, scratches, pores, concentric or spiral machining marks are not permitted. Higher demands must be made on the surface finish of dynamic mating surfaces than on static mating surfaces.

The characteristics most frequently used to describe the surface micro-finish R_a, R_z and R_{max} are defined in DIN 4762 / ISO 4287-1. These characteristics alone, however, are not sufficient for assessing suitability of a surface finish in seal engineering. The material contact area M_r in accordance with ISO 4287-1, must be taken into consideration. The significance of this surface specification is illustrated in Figure 4. It shows that specification of R_a and R_z does not describe the surface roughness profile accurately enough. The material contact area M_r is essential as the specific profile form determines this parameter. This in turn is directly dependent on the machining process employed.

Trelleborg Sealing Solutions recommends that the following surface finishes be observed:

Table 5: Surface Roughness

Surface Roughness µm			
Parameter	Mating Surface		Groove Surface
	Turcon® Materials	Zurcon® and Rubber	
R_{max}	0.63 - 2.50	1.00 - 4.00	< 16.0
R_z	0.40 - 1.60	0.63 - 2.50	< 10.0
R_a	0.05 - 0.20	0.10 - 0.40	< 1.6

The material contact area M_r should be approximately 50 to 70%, determined at a cut depth c = 0.25 x R_z, relative to a reference line of $C_{ref.}$ 5%.

Surface profile	R_a	R_z	M_r
closed profile form	0.1	1.0	70%
open profile form 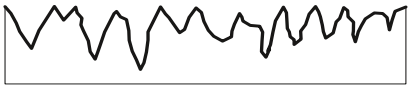	0.2	1.0	15%

Figure 4: Profile forms of surfaces

Figure 4 shows two surface profiles, both of which exhibit nearly the same value for R_z in the test procedure. The difference becomes obvious when the material contact areas of the surface roughness profiles are compared. These show that the upper profile with M_r = 70% has the better seal to mating surface ratio.

HARDWARE

For optimum performance Trelleborg Sealing Solutions recommends a piston rod of chrome-plated steel.

Material:	Preferably 42CrMo4V, purity class K3 to DIN 50602.
Induction hardened	min. HRC 45
Hardening depth	min. 2.5 mm

Ground and hard chrome-plated, coating thickness 20 to 30 µm, polished

Roughness	R_a 0.1 to 0.3 µm max. corresponding to N4 DIN/ISO 1302
Material contact area	M_r = 50 to 70%
Cut depth	c = 0.25 x R_z

For other rod materials, special coatings and treatments please contact your local Trelleborg Sealing Solutions marketing company.

Installation Instructions

The following points should be observed before installation of the seals:

- Ensure the piston rod has a lead-in chamfer; if not, use a calibration mandrel, see Figure 9.
- Deburr and chamfer, or round sharp edges, cover the tips of screw threads.
- Remove machining residue such as chips, dirt and other foreign particles, and carefully clean all parts.
- The seals can be installed more easily if the rod is greased or oiled. Attention must be paid to the compatibility of the seal materials with these lubricants. Use only grease without solid additives (e.g. molybdenum disulphide or zinc sulphide).
- Do not use tools with sharp edges.

INSTALLATION IN SPLIT GROOVES

Installation in split grooves is problem-free. The sequence of installation corresponds to the configuration of the seal, whereby the individual seal elements must not be allowed to twist. During final installation (insertion of the piston rod into the seal), elastomer or spring-energized seals must be calibrated. The piston rod itself can be used for this purpose, provided that it has a long lead-in chamfer. Alternatively, a calibration mandrel should be used.

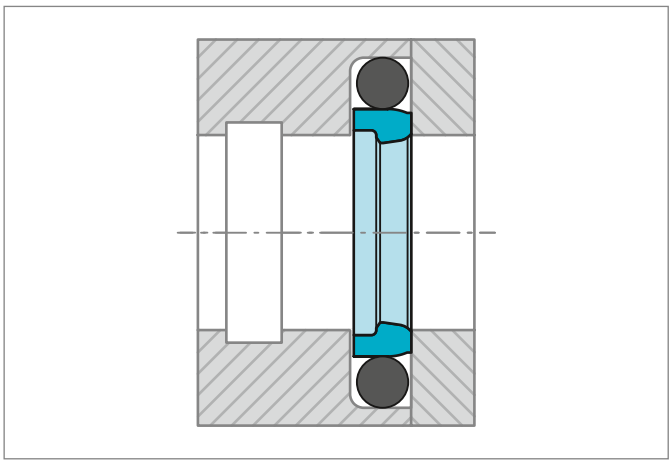

Figure 5: Installation in a split groove

INSTALLATION IN CLOSED GROOVES

By following the instructions in each seal type description (sizes for closed or split grooves) or using the light series for Turcon® seals, installation of our rod seal elements at small diameters will be problem-free.

For Zurcon® and polyurethane seals, the use of installation tools is recommended. If installation has to be performed without installation tools, use the same sequence as for Turcon® elastomer energized seals:

- Place the O-Ring into the groove (not necessary with U-Cup seals).
- Compress the Turcon® or Zurcon® seals into a kidney shape while avoiding sharp bends see Figure 6.

When a rod seal with notches is folded into a kidney shape, take care to avoid bending the seal at the position of the notches as this may cause overstretch or damage to the seal material.

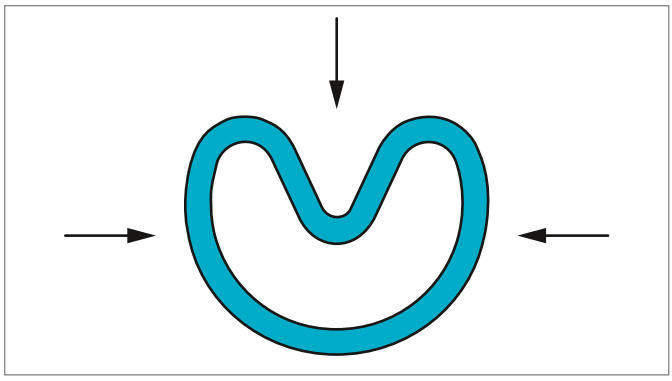

Figure 6: Kidney-shaped deformation of the seal ring

- Place the seal ring in compressed form into the groove and push against the O-Ring in the direction of the arrow and form the seal into a ring see Figure 7.

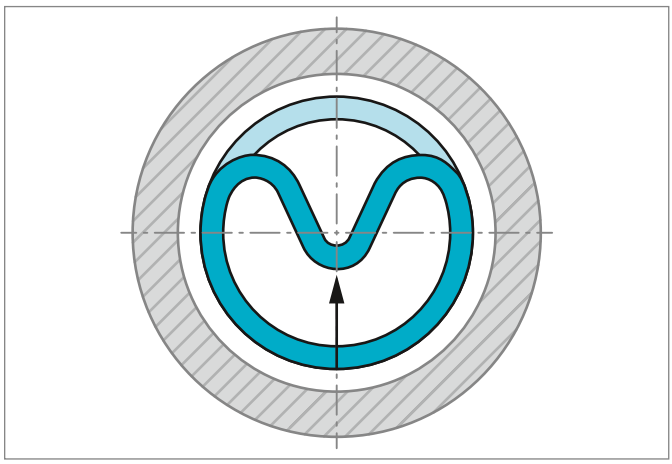

Figure 7: Inserting the seal ring into the closed groove

- Finally size the seal ring using a mandrel which should have a chamfer of 15° to 20° over at least the lead-in chamfer length Z_{min} x 2 see table 2.

The calibration mandrel should be made from a polymer material (e.g. polyamide) with good sliding characteristics and high surface quality in order to avoid damage to the seals.

The piston rod itself can also be used for calibration, provided it has a sufficiently long lead-in chamfer.

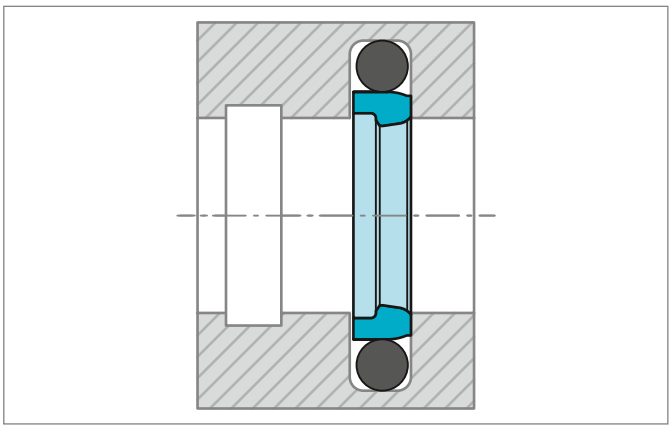

Figure 8: Installation in a closed groove

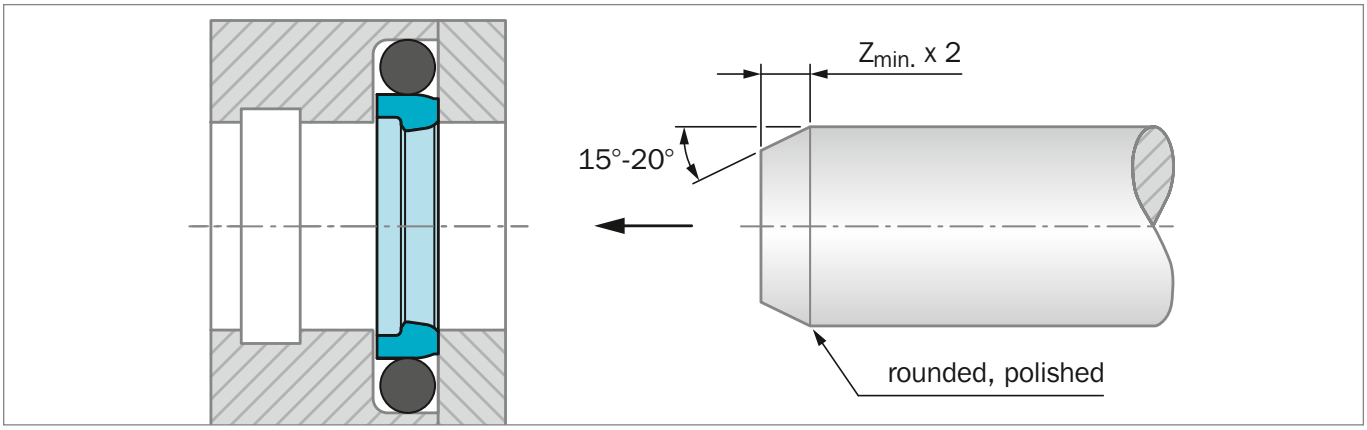

Figure 9: Calibration of the installed seal

Table 6: Closed groove installation for Turcon® rod seals

Stepseal® 2K and seals for similar groove sizes can be installed in closed grooves above the following rod diameters*:

O-Ring Series	Rod Diameter d_N mm	Materials
000	≥ 12	Turcon® M04, M12, T05, T08, T10, T29, T40, T46. Zurcon® Z51, Z52, Z80
100	≥ 16	
200	≥ 19	
300	≥ 38	
400	≥ 70	
400 H	≥ 200	
8.4**	≥ 256	
12.0***	≥ 650	

* For diameter d_N below 30 mm and/or not very accessible grooves it is often essential to use installation tools.
** O-Ring cross section according to SMS 1586
*** The energizer can have a special shape.

INSTALLATION OF AQ-SEAL® AND AQ-SEAL® 5 WITH QUAD-RING® OR BEAN SEAL:

The same installation procedure for rod Stepseal® 2K may be used for AQ-Seal® or AQ-Seal® 5 - see Figure 6 and Figure 7 - except AQ-Seal® 5 uses different groove sizes. However, the Quad-Ring® and Bean Seal should not be fitted until the AQ-Seal® or AQ-Seal® 5 have been calibrated - see Figure 9.

INSTALLATION HINT

AQ-Seal® and AQ-Seal® 5 with Quad-Ring® or Bean Seals are normally supplied without the Quad-Ring® / Bean Seal installed:

To assist mounting of the elastomer element after the AQ-Seal® or AQ-Seal® 5 ring has been calibrated, dental floss could be used to avoid twisting of the Quad-Ring® / Bean Seal - see Figure 10.

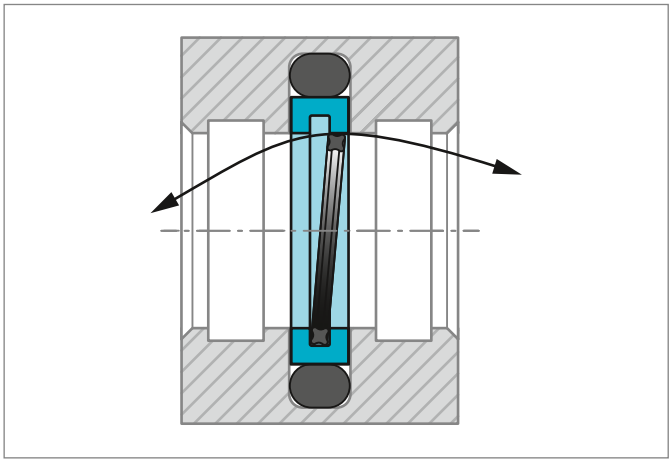

Figure 10: Installation of AQ-Seal® with Bean Seal for Rod

INSTALLATION OF TURCON® VL SEAL®

Installation in closed grooves is possible for diameters according to Table 7.

Table 7: Closed groove installation for VL Seal®

Series No.	Rod Diameter d_N mm
REL1	≥ 30
REL2	≥ 30
REL3	≥ 50
REL4	≥ 80
REL5	≥ 125
REL6	≥ 400

The O-Ring is inserted and positioned in the groove, then the seal is folded and inserted into the groove - see Figure 11.

The seal is folded out in the groove and is thereafter calibrated before the piston rod is inserted.

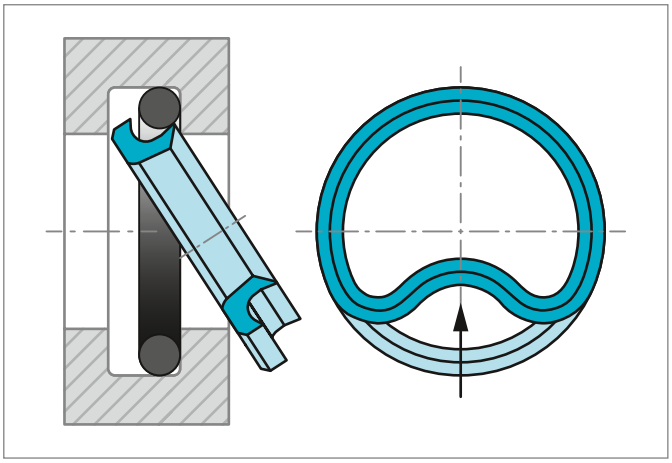

Figure 11: Installation of Rod VL Seal® in closed groove

INSTALLATION OF DOUBLE DELTA®

Installation in closed grooves is possible for diameters from 12 mm using the following procedure:

- Place the O-Ring into the groove.
- Compress the Turcon® seal into a kidney shape, while avoiding sharp bends - see Figure 12. When a rod seal with notches is folded in kidney shape, take care to avoid bending the seal at the position of the notches as this may cause overstretch or damage to the seal material.
- Place the seal ring in compressed form into the groove and push against the O-Ring in the direction of the arrow in the groove by hand - see Figure 13. For diameters smaller than 30 mm an inserter tube is recommended - see Figure 14.
- Finally, size the seal ring using a mandrel, see Figure 15, which should have a chamfer of 10° to 15° over a minimum length of 2 x lead-in chamfer length Z_{min} see Table 3

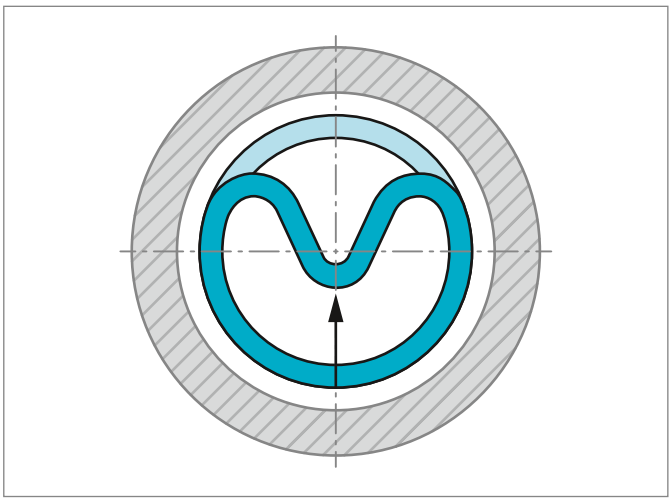

Figure 13: Inserting the seal ring into the closed groove

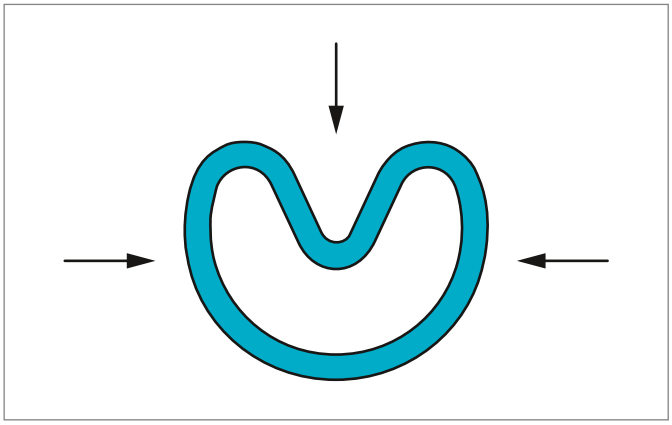

Figure 12: Kidney-shaped deformation

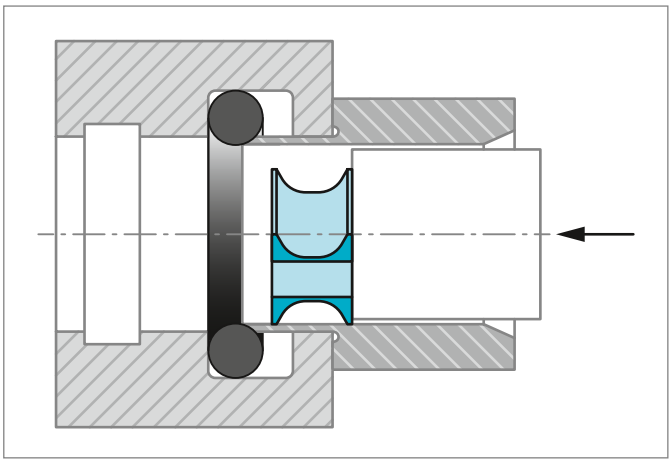

Figure 14: Insertion with an inserter tube

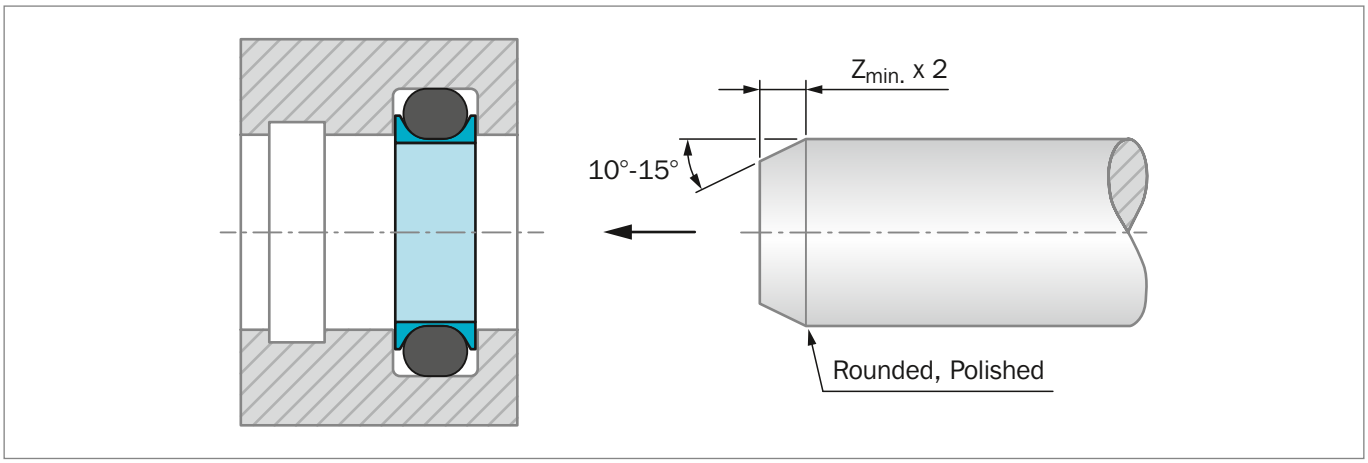

Figure 15: Calibration of the installed seal by means of a calibration mandrel

INSTALLATION OF SPRING ENERGIZED SEALS

Turcon® Variseal® M2 and M2S seals should preferably be installed in split grooves.

Installation in half-open grooves is possible with a snap fitting. Figure 16 shows the design of the groove.

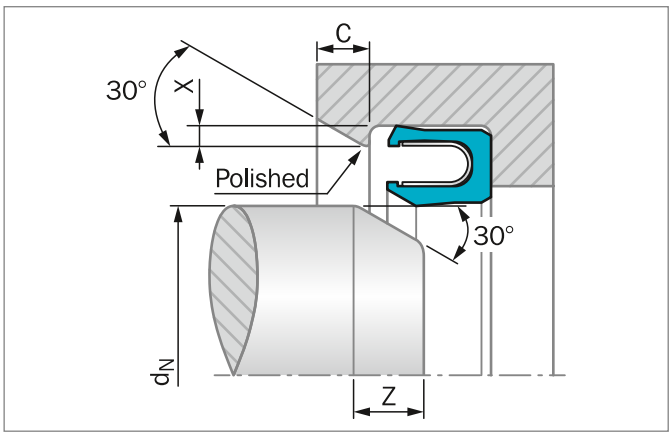

Figure 16: Installation in a half-open groove

Table 8: Installation in Half-Open Grooves

Serial-No.	X min.	d_N min.	Length Z min.	C min.
RVA0 / RVC0	0.4	20.00	1.20	0.70
RVA1 / RVC1	0.6	30.00	1.50	1.10
RVA2 / RVC2	0.7	35.00	2.50	1.25
RVA3 / RVC3	0.8	40.00	4.50	1.40
RVA4 / RVC4	0.9	45.00	6.00	1.60
RVA5 / RVC5	1.5	80.00	11.00	2.60

RVC alongside the RVA references: RVA0 / RVC0
For further information, see Figure 70 and Figure 202 and Figure 49 and Figure 180.

In exceptional cases, or with existing designs, an installation in closed grooves is also possible. The details in Table 9 should be regarded as guide values for installation.

Table 9: Installation in Closed Grooves

Serial-No.	d_N min.
RVA0 / RVC0	30
RVA1 / RVC1	70
RVA2 / RVC2	110
RVA3 / RVC3	300
RVA4 / RVC4	500
RVA5 / RVC5	800

RVC alongside the RVA references: RVA0 / RVC0

Quality Criteria

The cost-effective use of seals and bearings is highly influenced by the quality criteria applied in production. Seals and bearings from Trelleborg Sealing Solutions are continuously monitored according to strict quality standards from material acquisition through to delivery.

Certification of our production plants in accordance with international standards QS 9000 / ISO 9000 meets the specific requirements for quality control and management of purchasing, production and marketing functions.

Our quality policy is consistently controlled by strict procedures and guidelines which are implemented within all strategic areas of the company.

All testing of materials and products is performed in accordance with accepted test standards and specifications, such as random sample testing in accordance with ISO 2859, Part 1. Inspection specifications correspond to standards applicable to individual product groups (e.g. for O-Rings: ISO 3601).

Our sealing materials are produced free of chlorofluorinated hydrocarbons and carcinogenic elements.

The tenth digit of our part number defines the quality characteristics of the part. A hyphen indicates compliance with standard quality criteria outlined in this catalog. Customer-specific requirements are indicated by a different symbol in this position. Customers who require special quality criteria should contact their local Trelleborg Sealing Solutions marketing company for assistance. We have experience in meeting any customer quality requirements.

Storage Instructions

Seals and bearings are often stored as spare parts for prolonged periods. Most rubber changes in physical properties during storage and ultimately becomes unserviceable due to excessive hardening, softening, cracking, crazing or other surface degradation. These changes may be the result of individual factors or combinations of factors, such as the action of deformation, oxygen, ozone, light, heat, humidity or oils and solvents.

With a few simple precautions, the shelf life of these products can be considerably lengthened.

Fundamental instructions on storage, cleaning and maintenance of elastomeric seal elements is described in international standards, such as:
DIN 7716 / BS 3F68: 1977, ISO 2230, or DIN 9088

The standards give several recommendations for the storage and the shelf life of elastomers, depending on the material classes.

The following recommendations are based on several standards and are intended to provide the most suitable conditions for storing rubber. This guidance should be observed to maintain the optimum physical and chemical values of the parts:

Heat
The storage temperature should preferably be between +5 °C and +25 °C. Direct contact with sources of heat such as boilers, radiators and direct sunlight should be avoided. If the storage temperature is below +15 °C, care should be taken to avoid distorting them during handling at that temperature as they may have stiffened. In this case the temperature of the articles should be raised to approximately +20 °C before they are put into service.

Humidity
The relative humidity in the store room should be below 70%. Very moist or very dry conditions should be avoided. Condensation should not occur.

Light
Elastomeric seals should be protected from light sources, in particular direct sunlight or strong artificial light with an ultraviolet content. Individual storage bags offer the best protection as long as they are UV resistant. It is advisable to cover any windows of storage rooms with a red or orange coating or screen.

Radiation
Precaution should be taken to protect stored articles from all sources of ionising radiation likely to cause damage.

Oxygen and ozone
Where possible, elastomeric materials should be protected from circulating air by wrapping, storage in airtight containers or by other suitable means.

As ozone is particular deleterious to some elastomeric seals, storage rooms should not contain any equipment that is capable of generating ozone, such as mercury vapor lamps, high voltage electrical equipment, electric motors or other equipment which may give rise to electric sparks or silent electrical discharges. Combustion gases and organic vapor should be excluded from storage rooms else they may give rise to ozone via photochemical processes.

Deformation
Elastomeric materials should, wherever possible, be stored in a relaxed condition free from tension, compression or other deformation. Where articles are packed in a strain-free condition they should be stored in their original packaging.

Contact with liquid and semi-solid materials
Elastomeric seals should not be allowed to come into contact with solvents, oils, greases or any other semi-solid materials at any time during storage, unless so packed by the manufacturer.

Contact with metal and non-metals
Direct contact with certain metals, e.g. manganese, iron and particularly copper and its alloys, e.g. brass and compounds of these materials are known to have degrading effects on some rubbers. Elastomeric seals should not be stored in contact with such metals.

Because of possible transfer of plasticizers or other ingredients, rubbers must not be stored in contact with PVC. Different rubbers should preferably be separated from each other.

Cleaning
Where necessary, cleaning should be carried out with the aid of soap and water or methylated spirits. Water should not, however, be permitted to come into contact with fabric reinforced components, bonded seals (because of corrosion) or polyurethane rubbers. Disinfectants, or other organic solvents, as well as sharp-edged objects must not be used. The articles should be dried at room temperature and not placed near a source of heat.

Shelf life and shelf life control
The useful life of a elastomeric seals will depend to a large extent on the type of rubber. When stored under the recommended conditions (above sections) the below given shelf life of materials should be considered.

AU, Thermoplastics	4 years
NBR, HNBR, CR	6 years
EPDM	8 years
FKM, VMQ, FVMQ	10 years
FFKM, Isolast®	18 years
PTFE, Turcon®	unlimited

Elastomeric seals should be inspected after the given period. After this giving an extension period is possible.

Rubber details and components less than 1.5 mm thick are liable to be more seriously affected by oxidation degradation even when stored in satisfactory conditions as recommended. Therefore they may be inspected and tested more frequently than it is mentioned above.

Rubber details / seals in assembled components
It is recommended that the units should be exercised at least every six months and that the maximum period a rubber detail be allowed to remain assembled within a stored unit, without inspection, be a total of the initial period stated above and the extension period. Naturally this will depend on the design of the unit concerned.

Turcon® Stepseal® 2K

Single-acting

Rubber-energized plastic-faced seal

Material:
Turcon®, Zurcon® and Elastomer

Turcon® Stepseal® 2K*

Description

Rod seals must exhibit no dynamic leakage to the atmosphere side under all operating conditions and must be statically completely leak tight when the machine is at a standstill.

Furthermore, they should achieve a high degree of mechanical efficiency through low friction and be easy to install in small grooves. Costs and service life must meet the high expectations of the operator.

The rod seal Turcon® Stepseal® 2K comes closest to satisfying these ideal demands. Since the first Stepseal® was patented, Trelleborg Sealing Solutions has maintained the series as technically outstanding through continuous innovation. Turcon® Stepseal® 2K marks the latest development.

The introduction of Stepseal® made it possible to arrange several seals in sequence, thus allowing statically and dynamically tight double-acting tandem seal configurations to be created, while avoiding build-up of intermediate pressure. The single-acting seal element is made of high-grade Turcon® or Zurcon® materials with outstanding sliding and wear resistance properties. It is installed in Trelleborg Sealing Solutions standard Stepseal® grooves as well as ISO 7425-2 seal housing, using an O-Ring as an energizing element.

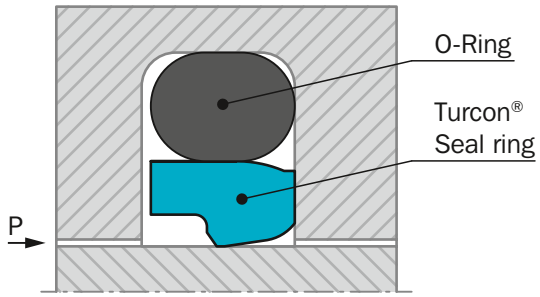

Figure 17: Turcon® Stepseal® 2K

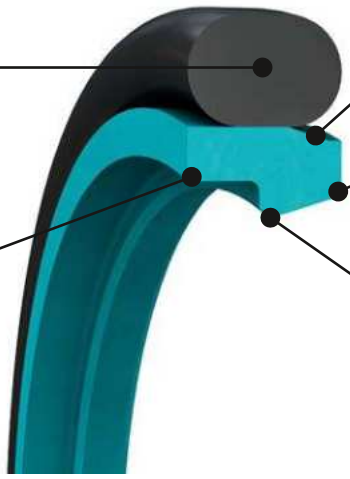

Elastomer O-Ring
High flexibility to compensate for hardware tolerances and movement.
Elastomer materials avaiable to meet a wide variety of service conditions.

Turcon® and Zurcon® Material
Low friction, no stick-slip.
High sealing efficiency and long service life.
Meets demanding service conditions.
High flexibility for easy installation.

O-Ring Relief Chamfer
Reduced seal load under pressure.
Reduced seal friction.

Contoured Rear Chamfer
Improved back-pumping of residual oil film for increased sealing efficiency.
Increased radial clearance.

Geometry
Patented geometry.
Proven seal edge design.
Resists damage during installation and service.

Figure 18: Turcon® Stepseal® 2K design features

* Patented geometry

METHOD OF OPERATION

The sealing performance of Turcon® Stepseal® 2K (Figure 17) results from its hydrodynamic properties. The classic Stepseal® seal edge creates a steep contact pressure gradient on the high pressure side and a shallow contact pressure gradient on the low pressure side. The controlled pressure gradients minimize fluid adherence to the piston rod during the extending stroke, and enables residual fluid film on the rod to be returned into the system on the return stroke. This is united with new patented design features which further improve the performance of Stepseal® 2K under severe service conditions.

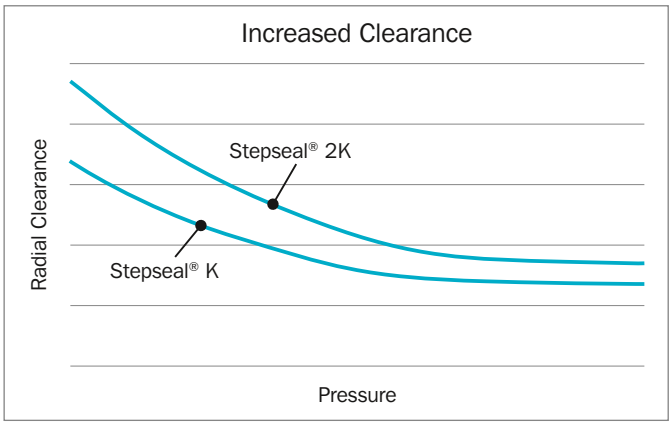

Figure 19: Turcon® Stepseal® 2K possesses superior extrusion resistance and allows increased hardware clearance

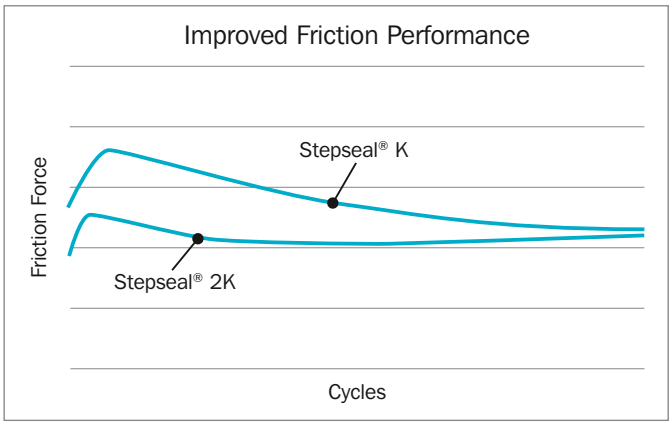

Figure 20: Turcon® Stepseal® 2K offers a uniform, low-friction characteristic

The O-Ring relief chamfer reduces pressure loading on the seal, whereby contact with the rod is optimised and sealing performance is improved at high service pressures. The special high-lift rear chamfer combines a smooth downstream sealing face with the ability to meet large radial clearances and hardware tolerances.

Stepseal® 2K gives high static and dynamic sealing performance, and the build-up of intermediate pressure often found with tandem seal configurations (Figure 21) is efficiently suppressed.

ADVANTAGES

- High static and dynamic sealing effect
- High extrusion resistance, allowing large hardware clearances
- Low friction, high efficiency
- Stick-slip free operation
- High abrasion resistance, high operational reliability
- Wide range of application temperatures and high resistance to chemicals, depending on the choice of O-Ring material
- Simple installation without seal edge deformation
- Available for all diameters up to 2600 mm rod diamter
- Fits standard Stepseal® 2K groove dimensions as well as ISO 7425 seal housings

APPLICATION EXAMPLES

- Mobile hydraulics
- Construction equipment
- Mining
- Standard cylinders
- Machine tools
- Injection molding machines
- Presses
- Clamp cylinders
- Wind turbines
- Automotive industry
- Shock absorbers
- Hydraulic hammers
- Servo hydraulics

OPERATING CONDITIONS

Pressure:	Up to 60 MPa
Speed:	Up to 15 m/s with reciprocating movements, frequency up to 5 Hz
Temperature:	-45 °C to +200 °C depending on O-Ring material
Media:	Mineral oil-based hydraulic fluids, flame retardant hydraulic fluids, environmentally friendly hydraulic fluids (bio-oils), phosphate ester, water and others, depending on the O-Ring material compatibility (see Table 11)
Clearance:	The maximum permissible radial clearance S_{max} is shown in Table 12, as a function of the operating pressure and functional diameter.

IMPORTANT NOTE

The above data are maximum values and cannot be used at the same time, e.g. the maximum operating speed depends on material type, pressure, temperature and gap value. Temperature range also depends on media.

SERIES

Different cross section sizes are recommended as a function of the seal diameters.

Table 12 shows the relationship between the series number according to the seal diameter range and the different application class sizes. These application classes are:

Standard application:	General applications without exceptional operating conditions.
Light application:	Applications with demands for reduced friction or for smaller grooves.
Heavy-duty application:	For exceptional operating loads such as high pressures, pressure peaks, etc.

Table 10: Available Range

Series No.	Rod Diameter d_N f8/h9
RSK00	1.5 - 130.0
RSK10	6.0 - 250.0
RSK20	8.0 - 450.0
RSK30	12.0 - 650.0
RSK40	38.0 - 650.0
RSK80	140.0 - 999.9
RSK50	180.0 - 999.9
RSK5X	1000.0 - 1200.0
RSK60	650.0 - 999.9
RSK6X	1000.0 - 2600.0

For the Standard Recommendations Application range see Table 12.

ISO GROOVE

Stepseal® 2K is installed in Trelleborg Sealing Solutions standard Stepseal® grooves or according to ISO 7425-2 seal housing.

REDUNDANT SEALING SYSTEM

In many applications, secondary seal systems are required. Figure 21 shows a tandem configuration with the Stepseal® 2K.

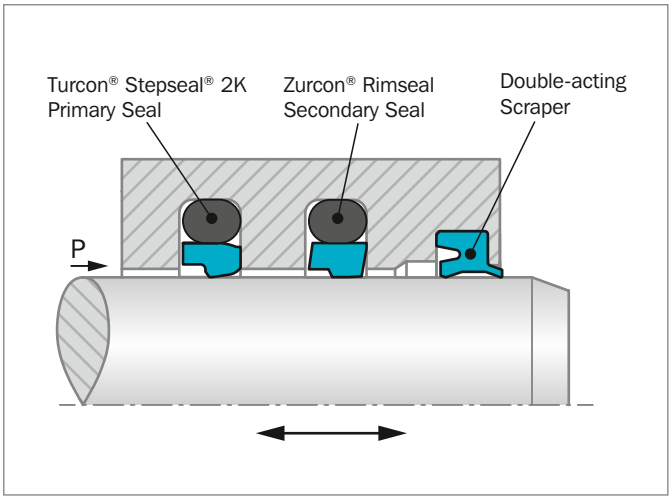

Figure 21: Turcon® Stepseal® 2K and Zurcon® Rimseal in tandem configuration

In this configuration it must be noted that a sufficiently large space is formed between the seals to take the hydraulic fluid, as shown in the figure.

Depending on the application and the operating conditions, the combination of different materials offers a further improvement in the sealing efficiency and the service life of the system, e.g. in hydraulic cylinders subject to high loads and under rough operating conditions, the primary seal should be made of Turcon® and the secondary seal of Zurcon®.

Stepseal® 2K elements should always be used in combination with a double-acting scraper to provide optimum sealing effect.

The scrapers Turcon® Excluder® 2, Turcon® Excluder® 5, Turcon® Excluder® F, Zurcon® Excluder® 500, DA17, DA22 and DA24 are well suited to such applications. For further details, please refer to the Scrapers section in this catalog.

INSTALLATION INSTRUCTIONS

Stepseal® 2K is installed according to information on page 31 and 32.

Closed groove installation according to dimensions in Table 6 page 32.

RECOMMENDED MATERIALS

The following material combinations have proven effective for hydraulic applications:

Turcon® Stepseal® 2K in Turcon® M12
All round material for light to heavy hydraulic applications with linear, short stroke or helical movements in mineral oils, flame retardant hydraulic fluids, phosphate ester, bio-oils or fluids having low lubricating properties:

O-Ring	NBR 70 Shore A	N
	FKM 70 Shore A	V
Set Code:	M12N or M12V	

Turcon® Stepseal® 2K in Turcon® T46
For medium to heavy applications with linear movements in mineral oils and other media with good lubrication:

O-Ring:	NBR 70 Shore A	N
	FKM 70 Shore A	V
Set Code:	T46N or T46V	

For specific applications, all Turcon® materials are available. Other material combinations are listed in Table 11.

Table 11: Turcon® and Zurcon® Materials for Stepseal® 2K

Material, Applications, Properties	Code	O–Ring Material Shore A	Code	O-Ring Operating Temp.* °C	Mating Surface Material	MPa max. Dynamic
Turcon® M12 First material choice for seals in linear motion Overall improved properties For new constructions and updating For all commonly applied hydraulic fluids including fluids with low lubrication performance Lowest friction and best sliding properties Lowest wear on seals Improved absorption of abrasive contaminants Low wear or abrasion of counter surface BAM tested Mineral fiber and additives filled Color: Dark gray	M12	NBR 70	N	-30 to +100	Steel Steel hardened Steel chrome plated (rod) Steel plated (rod) Cast iron Stainless steel Titanium	50
		NBR 70 Low temp.	T	-45 to +80		
		FKM 70	V	-10 to +200		
Turcon® T05 For lubricating fluids Also for gas service Very low friction Very good sliding and sealing properties Color: Turquoise	T05	NBR 70	N	-30 to +100	Steel Steel hardened Steel chrome plated (rod)	20
		NBR 70 Low temp.	T	-45 to +80		
		FKM 70	V	-10 to +200		
Turcon® T08 For lubricating fluids and linear motion Very high compressive strength and extrusion resistance Hard counter surfaces is recommended Bronze filled Color: Light to dark brown, which may have variations in shading	T08	NBR 70	N	-30 to +100	Steel hardened Steel chrome plated (rod) Cast iron	60
		NBR 70 Low temp.	T	-45 to +80		
		FKM 70	V	-10 to +200		
Turcon® T10 For hydraulic and pneumatic For lubricating and non-lubricating fluids High extrusion resistance Good chemical resistance Not for electrically conducting fluids BAM tested Carbon, graphite filled Color: Black	T10	NBR 70	N	-30 to +100	Steel Steel hardened Steel chrome plated (rod) Stainless steel	40
		NBR 70 Low temp.	T	-45 to +80		
		FKM 70	V	-10 to +200		
		EPDM 70	E**	-45 to +145		
Turcon® T29 For lubricating and non-lubricating fluids Good extrusion resistance Surface texture is not suitable for gas sealing Not for electrically conducting fluids Carbon fiber filled Color: Gray	T29	NBR 70	N	-30 to +100	Steel Steel hardened Steel chrome plated (rod) Cast iron Stainless steel	30
		NBR 70 Low temp.	T	-45 to +80		
		FKM 70	V	-10 to +200		
		EPDM 70	E**	-45 to +145		

Table continues on next page

Material, Applications, Properties	Code	O–Ring Material Shore A	Code	O-Ring Operating Temp.* °C	Mating Surface Material	MPa max. Dyna-mic
Turcon® T40 For lubricating and non-lubricating fluids High frequency and short strokes Water hydraulics Surface texture is not suitable for gas sealing Carbon fiber filled Color: Gray	T40	NBR 70	N	-30 to +100	Steel Steel hardened Steel chrome plated (rod) Cast iron Stainless steel Aluminum	25
		NBR 70 Low temp.	T	-45 to +80		
		FKM 70	V	-10 to +200		
		EPDM 70	E**	-45 to +145		
Turcon® T46 For lubricated hydraulics in linear motion High compressive strength High extrusion resistance Very good sliding and wear properties BAM tested Bronze filled Color: Light to dark brown, which may have variations in shading	T46	NBR 70	N	-30 to +100	Steel hardened Steel chrome plated (rod) Cast iron	50
		NBR 70 Low temp.	T	-45 to +80		
		FKM 70	V	-10 to +200		
Zurcon® Z51*** For mineral oil based fluids Very high abrasion and extrusion resistance For counter surfaces with rougher surface finishes Limited chemical resistance Max. working temperature +110 °C Cast polyurethane Color: Yellow to light-brown	Z51	NBR 70	N	-30 to +100	Steel Steel hardened Steel chrome plated (rod) Cast iron Stainless steel Ceramic coating	60
		NBR 70 Low temp.	T	-45 to +80		
Zurcon® Z80 For lubricating and non-lubricating fluids Water based fluids, air and gases Dry air pneumatics High abrasion and extrusion resistance For service in abrasive conditions and media with particles Good chemical resistance Limited temperature capability (-60 to +80 °C) UHMWPE (Ultra High Molecular Weight Polyethylene) Color: White to off-white	Z80	NBR 70	N	-30 to (+100)	Steel Steel hardened Steel chrome plated (rod) Stainless steel Aluminum Ceramic coating	35
		NBR 70 Low temp.	T	-45 to +80		
		EPDM 70	E**	-45 to (+145)		

* The O-Ring operation temperature is only valid in mineral hydraulic oil (except EPDM).

** Material not suitable for mineral oils.

*** Max. diameter 2200 mm.

BAM: Tested by "Bundesanstalt Materialprufung, Germany".

Highlighted materials are recommended.

Installation Recommendation

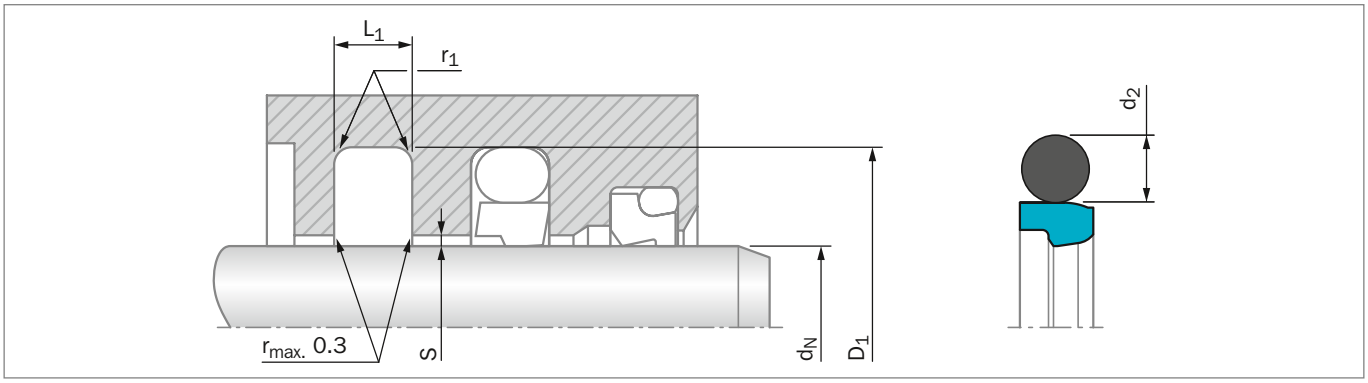

Figure 22: Installation Drawing

Table 12: Installation Dimensions – Standard Recommendations

Series No.	Rod Diameter d_N f8/h9			Groove Diameter	Groove Width	Radius	Radial Clearance S_{max}*			O-Ring Cross Section
	Standard Application	Light Application**	Heavy Duty Application	D_1 H9	L_1 +0.2	$r_{1\,max}$	10 MPa	20 MPa	40 MPa	d_2
RSK0	3 - 7.9	8 - 18.9	-	d_N + 4.9	2.2	0.4	0.30	0.20	0.15	1.78
RSK1	8 - 18.9	19 - 37.9	-	d_N + 7.3	3.2	0.6	0.40	0.25	0.15	2.62
RSK2	19 - 37.9	38 - 199.9	8 - 18.9	d_N + 10.7	4.2	1.0	0.50	0.30	0.20	3.53
RSK3	38 - 199.9	200 - 255.9	19 - 37.9	d_N + 15.1	6.3	1.3	0.70	0.40	0.25	5.33
RSK4	200 - 255.9	256 - 649.9	38 - 199.9	d_N + 20.5	8.1	1.8	0.80	0.60	0.35	7.00
RSK8	256 - 649.9	650 - 999.9	200 - 255.9	d_N + 24.0	8.1	1.8	0.90	0.70	0.40	7.00
RSK5	650 - 999.9	-	256 - 649.9	d_N + 27.3	9.5	2.5	1.00	0.80	0.50	8.40
RSK5X	-	1000 - 1200	-	d_N + 27.3	9.5	2.5	1.00	0.80	0.50	8.40
RSK6***	-	-	650 - 999.9	d_N + 38.0	13.8	3.0	1.20	0.90	0.60	12.00
RSK6X***	1000 - 2600	-	-	d_N + 38.0	13.8	3.0	1.20	0.90	0.60	12.00

* At pressures > **40 MPa** use diameter tolerance H8/f8 (bore/rod) in the area behind seal or consult your local Trelleborg Sealing Solutions marketing company for alternative material or profiles.
Slydring® / Wear Rings are not applicable at very small radial clearances, please consult the Slydring® section in this catalog.

** For easier installation in closed grooves with small rod diameters < 40 mm.

*** All O-Rings with 12 mm cross section are delivered as a special profile ring.

ORDERING EXAMPLE

Turcon® Stepseal® 2K complete with O-Ring, standard application:

Series:	RSK4 from Table 12
Rod diameter:	d_N = 250.0 mm
TSS Part No.:	RSK402500 from Table 13

Select the material from Table 11. The corresponding code numbers are appended to the TSS Part No. Together these form the TSS Article Number. The TSS Article Number for all intermediate sizes can be determined by following the example:

TSS Article No. RSK4 0 2500 - M12 N

- TSS Series No. — RSK4
- Type (Standard) — 0
- Rod Diameter x 10**** — 2500
- Quality Index (Standard) — -
- Material Code (Seal Ring) — M12
- Material code (O-Ring) — N

**** For diameters $d_n \geq$ 1000.0 mm multiply only by factor 1.
Example: RSK6 for diameter d_n = 1200.0 mm.
TSS Article No.: RSK6**X1200**-M12N.

Table 13: Installation Dimensions / TSS Part No.

Rod Dia. d_N f8/h9	Groove Dia. D_1 H9	Groove Width L_1 +0.2	TSS Part No.	O-Ring Size
3.0	7.9	2.2	RSK000030	4.80 x 1.80
4.0	**8.9**	**2.2**	**RSK000040**	**5.60 x 1.80**
5.0	**9.9**	**2.2**	**RSK000050**	**6.70 x 1.80**
6.0	**10.9**	**2.2**	**RSK000060**	**7.65 x 1.78**
7.0	11.9	2.2	RSK000070	8.75 x 1.80
8.0	**12.9**	**2.2**	**RSK000080**	**9.50 x 1.80**
8.0	**15.3**	**3.2**	**RSK100080**	**10.77 x 2.62**
9.0	13.9	2.2	RSK000090	10.82 x 1.78
9.0	16.3	3.2	RSK100090	10.77 x 2.62
10.0	**14.9**	**2.2**	**RSK000100**	**11.80 x 1.80**
10.0	**17.3**	**3.2**	**RSK100100**	**12.37 x 2.62**
12.0	**16.9**	**2.2**	**RSK000120**	**14.00 x 1.78**
12.0	**19.3**	**3.2**	**RSK100120**	**14.50 x 2.65**
12.7	17.6	2.2	RSK000127	14.00 x 1.78
12.7	20.0	3.2	RSK100127	15.54 x 2.62
14.0	**18.9**	**2.2**	**RSK000140**	**15.60 x 1.78**
14.0	**21.3**	**3.2**	**RSK100140**	**17.12 x 2.62**
15.0	19.9	2.2	RSK000150	17.17 x 1.78
15.0	22.3	3.2	RSK100150	18.00 x 2.65
16.0	**20.9**	**2.2**	**RSK000160**	**17.17 x 1.78**
16.0	**23.3**	**3.2**	**RSK100160**	**18.72 x 2.62**
17.0	21.9	2.2	RSK000170	18.77 x 1.78
18.0	**22.9**	**2.2**	**RSK000180**	**20.35 x 1.78**
18.0	**25.3**	**3.2**	**RSK100180**	**20.29 x 2.62**
19.0	29.7	4.2	RSK200190	23.40 x 3.53
20.0	**27.3**	**3.2**	**RSK100200**	**21.89 x 2.62**
20.0	**30.7**	**4.2**	**RSK200200**	**25.00 x 3.53**
22.0	**29.3**	**3.2**	**RSK100220**	**25.07 x 2.62**
22.0	**32.7**	**4.2**	**RSK200220**	**26.58 x 3.53**
24.0	31.3	3.2	RSK100240	26.64 x 2.62
25.0	**32.3**	**3.2**	**RSK100250**	**28.24 x 2.62**
25.0	**35.7**	**4.2**	**RSK200250**	**29.75 x 3.53**
25.4	32.7	3.2	RSK100254	28.24 x 2.62
25.4	36.1	4.2	RSK200254	29.75 x 3.53
26.0	33.3	3.2	RSK100260	28.24 x 2.62
26.0	36.7	4.2	RSK200260	29.75 x 3.53
28.0	**35.3**	**3.2**	**RSK100280**	**29.82 x 2.62**
28.0	**38.7**	**4.2**	**RSK200280**	**32.92 x 3.53**
28.575	35.875	3.2	RSK100286	31.42 x 2.62
30.0	37.3	3.2	RSK100300	32.99 x 2.62
30.0	40.7	4.2	RSK200300	34.52 x 3.53

Rod Dia. d_N f8/h9	Groove Dia. D_1 H9	Groove Width L_1 +0.2	TSS Part No.	O-Ring Size
32.0	**39.3**	**3.2**	**RSK100320**	**34.59 x 2.62**
32.0	**42.7**	**4.2**	**RSK200320**	**36.09 x 3.53**
34.0	44.7	4.2	RSK200340	37.69 x 3.53
35.0	42.3	3.2	RSK100350	37.77 x 2.62
35.0	45.7	4.2	RSK200350	37.69 x 3.53
36.0	**43.3**	**3.2**	**RSK100360**	**39.34 x 2.62**
36.0	**46.7**	**4.2**	**RSK200360**	**40.87 x 3.53**
37.0	44.3	3.2	RSK100370	39.34 x 2.62
37.0	47.7	4.2	RSK200370	40.87 x 3.53
38.0	48.7	4.2	RSK200380	40.87 x 3.53
38.0	53.1	6.3	RSK300380	43.82 x 5.33
40.0	**50.7**	**4.2**	**RSK200400**	**44.04 x 3.53**
40.0	**55.1**	**6.3**	**RSK300400**	**43.82 x 5.33**
42.0	52.7	4.2	RSK200420	47.22 x 3.53
42.0	57.1	6.3	RSK300420	46.99 x 5.33
43.0	53.7	4.2	RSK200430	47.22 x 3.53
44.4	59.5	6.3	RSK300444	50.17 x 5.33
45.0	**55.7**	**4.2**	**RSK200450**	**50.39 x 3.53**
45.0	**60.1**	**6.3**	**RSK300450**	**50.17 x 5.33**
48.0	58.7	4.2	RSK200480	53.57 x 3.53
48.0	63.1	6.3	RSK300480	53.34 x 5.33
50.0	**60.7**	**4.2**	**RSK200500**	**53.57 x 3.53**
50.0	**65.1**	**6.3**	**RSK300500**	**56.52 x 5.33**
50.8	61.5	4.2	RSK200508	53.57 x 3.53
50.8	65.9	6.3	RSK300508	56.52 x 5.33
52.0	62.7	4.2	RSK200520	56.74 x 3.53
52.0	67.1	6.3	RSK300520	56.52 x 5.33
54.0	69.1	6.3	RSK300540	59.69 x 5.33
55.0	65.7	4.2	RSK200550	59.92 x 3.53
55.0	70.1	6.3	RSK300550	59.69 x 5.33
56.0	**66.7**	**4.2**	**RSK200560**	**59.92 x 3.53**
56.0	**71.1**	**6.3**	**RSK300560**	**62.87 x 5.33**
56.0	**76.5**	**8.1**	**RSK400560**	**64 x 7.00**
57.0	72.1	6.3	RSK300570	62.87 x 5.33
59.0	69.7	4.2	RSK200590	63.09 x 3.53
60.0	70.7	4.2	RSK200600	63.09 x 3.53
60.0	75.1	6.3	RSK300600	66.04 x 5.33
63.0	**73.7**	**4.2**	**RSK200630**	**66.27 x 3.53**
63.0	**78.1**	**6.3**	**RSK300630**	**69.22 x 5.33**
63.5	78.6	6.3	RSK300635	69.22 x 5.33
65.0	75.7	4.2	RSK200650	69.44 x 3.53

Rod Dia. d_N f8/h9	Groove Dia. D_1 H9	Groove Width L_1 +0.2	TSS Part No.	O-Ring Size
65.0	80.1	6.3	RSK300650	69.22 x 5.33
67.0	77.7	4.2	RSK200670	72.62 x 3.53
69.0	84.1	6.3	RSK300690	75.57 x 5.33
70.0	**80.7**	**4.2**	**RSK200700**	**75.79 x 3.53**
70.0	**85.1**	**6.3**	**RSK300700**	**75.57 x 5.33**
70.0	**90.5**	**8.1**	**RSK400700**	**78 x 7.00**
72.0	82.7	4.2	RSK200720	75.79 x 3.53
73.0	88.1	6.3	RSK300730	78.74 x 5.33
75.0	85.7	4.2	RSK200750	78.97 x 3.53
75.0	90.1	6.3	RSK300750	81.92 x 5.33
76.2	91.3	6.3	RSK300762	81.92 x 5.33
78.0	93.1	6.3	RSK300780	85.09 x 5.33
80.0	**90.7**	**4.2**	**RSK200800**	**85.32 x 3.53**
80.0	**95.1**	**6.3**	**RSK300800**	**85.09 x 5.33**
80.0	**100.5**	**8.1**	**RSK400800**	**88 x 7.00**
82.5	97.6	6.3	RSK300825	88.27 x 5.33
83.0	93.7	4.2	RSK200830	88.49 x 3.53
85.0	95.7	4.2	RSK200850	88.49 x 3.53
85.0	100.1	6.3	RSK300850	91.44 x 5.33
85.0	105.5	8.1	RSK400850	93 x 7.00
89.0	104.1	6.3	RSK300890	94.62 x 5.33
90.0	**100.7**	**4.2**	**RSK200900**	**94.84 x 3.53**
90.0	**105.1**	**6.3**	**RSK300900**	**94.62 x 5.33**
90.0	**110.5**	**8.1**	**RSK400900**	**98 x 7.00**
92.0	102.7	4.2	RSK200920	98.02 x 3.53
92.0	107.1	6.3	RSK300920	97.79 x 5.33
95.0	105.7	4.2	RSK200950	101.19 x 3.53
95.0	110.1	6.3	RSK300950	100.97 x 5.33
100.0	**110.7**	**4.2**	**RSK201000**	**104.37 x 3.53**
100.0	**115.1**	**6.3**	**RSK301000**	**107.32 x 5.33**
100.0	**120.5**	**8.1**	**RSK401000**	**108 x 7.00**
101.6	116.7	6.3	RSK301016	107.32 x 5.33
104.7	119.8	6.3	RSK301047	110.49 x 5.33
105.0	120.1	6.3	RSK301050	110.49 x 5.33
105.0	125.5	8.1	RSK401050	113.67 x 7.00
110.0	**120.7**	**4.2**	**RSK201100**	**113.89 x 3.53**
110.0	**125.1**	**6.3**	**RSK301100**	**116.84 x 5.33**
110.0	**130.5**	**8.1**	**RSK401100**	**116.84 x 7.00**
115.0	130.1	6.3	RSK301150	120.02 x 5.33
120.0	135.1	6.3	RSK301200	126.37 x 5.33
120.0	140.5	8.1	RSK401200	129.54 x 7.00

Rod Dia. d_N f8/h9	Groove Dia. D_1 H9	Groove Width L_1 +0.2	TSS Part No.	O-Ring Size
125.0	**140.1**	**6.3**	**RSK301250**	**129.54 x 5.33**
125.0	**145.5**	**8.1**	**RSK401250**	**132.72 x 7.00**
125.4	140.5	6.3	RSK301254	132.72 x 5.33
127.0	142.1	6.3	RSK301270	132.72 x 5.33
130.0	145.1	6.3	RSK301300	135.89 x 5.33
130.0	150.5	8.1	RSK401300	139.07 x 7.00
132.0	147.1	6.3	RSK301320	139.07 x 5.33
135.0	145.7	4.2	RSK201350	139.29 x 3.53
135.0	150.1	6.3	RSK301350	142.24 x 5.33
137.0	152.1	6.3	RSK301370	142.24 x 5.33
138.0	153.1	6.3	RSK301380	142.24 x 5.33
140.0	150.7	4.2	RSK201400	145.64 x 3.53
140.0	**155.1**	**6.3**	**RSK301400**	**145.42 x 5.33**
140.0	160.5	8.1	RSK401400	148.59 x 7.00
140.5	155.6	6.3	RSK301405	145.42 x 5.33
145.0	160.1	6.3	RSK301450	151.77 x 5.33
145.0	165.5	8.1	RSK401450	151.77 x 7.00
150.0	165.1	6.3	RSK301500	158.12 x 5.33
150.0	170.5	8.1	RSK401500	158.12 x 7.00
153.0	168.1	6.3	RSK301530	158.12 x 5.33
155.0	170.1	6.3	RSK301550	158.12 x 5.33
160.0	**175.1**	**6.3**	**RSK301600**	**164.47 x 5.33**
160.0	**180.5**	**8.1**	**RSK401600**	**170.82 x 7.00**
165.0	180.1	6.3	RSK301650	170.82 x 5.33
170.0	185.1	6.3	RSK301700	177.17 x 5.33
170.0	190.5	8.1	RSK401700	177.17 x 7.00
173.0	188.1	6.3	RSK301730	177.17 x 5.33
175.0	190.1	6.3	RSK301750	183.52 x 5.33
180.0	**195.1**	**6.3**	**RSK301800**	**183.52 x 5.33**
180.0	**200.5**	**8.1**	**RSK401800**	**189.87 x 7.00**
185.0	200.1	6.3	RSK301850	189.87 x 5.33
185.0	205.5	8.1	RSK401850	196.22 x 7.00
190.0	205.1	6.3	RSK301900	196.22 x 5.33
190.0	210.5	8.1	RSK401900	196.22 x 7.00
195.0	210.1	6.3	RSK301950	202.57 x 5.33
200.0	**215.1**	**6.3**	**RSK302000**	**208.92 x 5.33**
200.0	**220.5**	**8.1**	**RSK402000**	**208.90 x 7.00**
205.0	225.5	8.1	RSK402050	215.27 x 7.00
210.0	230.5	8.1	RSK402100	215.27 x 7.00
211.0	231.5	8.1	RSK402110	215.27 x 7.00
212.0	232.5	8.1	RSK402120	227.97 x 7.00

Rod Dia. d_N f8/h9	Groove Dia. D_1 H9	Groove Width L_1 +0.2	TSS Part No.	O-Ring Size
215.0	235.5	8.1	RSK402150	227.97 x 7.00
220.0	**240.5**	**8.1**	**RSK402200**	**227.97 x 7.00**
225.0	245.5	8.1	RSK402250	240.67 x 7.00
230.0	245.1	6.3	RSK302300	234.32 x 5.33
230.0	250.5	8.1	RSK402300	240.67 x 7.00
235.0	255.5	8.1	RSK402350	240.67 x 7.00
240.0	260.5	8.1	RSK402400	253.37 x 7.00
245.0	265.5	8.1	RSK402450	253.37 x 7.00
250.0	**270.5**	**8.1**	**RSK402500**	**266.07 x 7.00**
260.0	284.0	8.1	RSK802600	266.07 x 7.00
265.0	289.0	8.1	RSK802650	278.77 x 7.00
270.0	290.5	8.1	RSK402700	278.77 x 7.00
270.0	294.0	8.1	RSK802700	278.77 x 7.00
275.0	299.0	8.1	RSK802750	291.47 x 7.00
280.0	**304.0**	**8.1**	**RSK802800**	**291.47 x 7.00**
285.0	309.0	8.1	RSK802850	291.47 x 7.00
290.0	314.0	8.1	RSK802900	304.17 x 7.00
295.0	319.0	8.1	RSK802950	304.17 x 7.00
300.0	320.5	8.1	RSK403000	304.17 x 7.00
300.0	324.0	8.1	RSK803000	316.87 x 7.00
310.0	334.0	8.1	RSK803100	316.87 x 7.00
320.0	**344.0**	**8.1**	**RSK803200**	**329.57 x 7.00**
330.0	354.0	8.1	RSK803300	342.27 x 7.00
340.0	364.0	8.1	RSK803400	354.97 x 7.00
350.0	370.5	8.1	RSK403500	354.97 x 7.00
350.0	374.0	8.1	RSK803500	367.67 x 7.00
360.0	**384.0**	**8.1**	**RSK803600**	**367.67 x 7.00**
365.0	389.0	8.1	RSK803650	380.37 x 7.00
370.0	394.0	8.1	RSK803700	380.37 x 7.00
375.0	399.0	8.1	RSK803750	393.07 x 7.00
380.0	404.0	8.1	RSK803800	393.07 x 7.00
390.0	414.0	8.1	RSK803900	405.26 x 7.00
400.0	424.0	8.1	RSK804000	417.96 x 7.00
410.0	434.0	8.1	RSK804100	417.96 x 7.00
420.0	444.0	8.1	RSK804200	430.66 x 7.00
430.0	454.0	8.1	RSK804300	443.36 x 7.00
435.0	459.0	8.1	RSK804350	443.36 x 7.00
440.0	464.0	8.1	RSK804400	456.06 x 7.00
450.0	474.0	8.1	RSK804500	468.76 x 7.00
460.0	484.0	8.1	RSK804600	468.76 x 7.00
470.0	494.0	8.1	RSK804700	481.38 x 7.00

Rod Dia. d_N f8/h9	Groove Dia. D_1 H9	Groove Width L_1 +0.2	TSS Part No.	O-Ring Size
480.0	504.0	8.1	RSK804800	494.16 x 7.00
485.0	509.0	8.1	RSK804850	494.16 x 7.00
490.0	514.0	8.1	RSK804900	506.86 x 7.00
500.0	524.0	8.1	RSK805000	506.86 x 7.00
510.0	534.0	8.1	RSK805100	532.26 x 7.00
520.0	544.0	8.1	RSK805200	532.26 x 7.00
525.0	549.0	8.1	RSK805250	532.26 x 7.00
530.0	554.0	8.1	RSK805300	557.66 x 7.00
540.0	564.0	8.1	RSK805400	557.66 x 7.00
550.0	574.0	8.1	RSK805500	557.66 x 7.00
560.0	584.0	8.1	RSK805600	582.68 x 7.00
570.0	594.0	8.1	RSK805700	582.68 x 7.00
580.0	604.0	8.1	RSK805800	608.08 x 7.00
585.0	609.0	8.1	RSK805850	608.08 x 7.00
590.0	614.0	8.1	RSK805900	608.08 x 7.00
600.0	624.0	8.1	RSK806000	608.08 x 7.00
610.0	634.0	8.1	RSK806100	633.48 x 7.00
620.0	644.0	8.1	RSK806200	633.48 x 7.00
630.0	654.0	8.1	RSK806300	658.88 x 7.00
640.0	664.0	8.1	RSK806400	658.88 x 7.00
650.0	677.3	9.5	RSK506500	663 x 8.40
656.0	683.3	9.5	RSK506560	669 x 8.40
660.0	687.3	9.5	RSK506600	673 x 8.40
680.0	707.3	9.5	RSK506800	693 x 8.40
685.0	712.3	9.5	RSK506850	698 x 8.40
700.0	724.0	8.1	RSK807000	712 x 7.00
700.0	727.3	9.5	RSK507000	713 x 8.40
710.0	737.3	9.5	RSK507100	723 x 8.40
730.0	757.3	9.5	RSK507300	743 x 8.40
760.0	787.3	9.5	RSK507600	773 x 8.40
765.0	792.3	9.5	RSK507650	778 x 8.40
780.0	807.3	9.5	RSK507800	793 x 8.40
790.0	817.3	9.5	RSK507900	803 x 8.40
800.0	827.3	9.5	RSK508000	813 x 8.40
810.0	837.3	9.5	RSK508100	823 x 8.40
820.0	847.3	9.5	RSK508200	833 x 8.40
830.0	857.3	9.5	RSK508300	843 x 8.40
850.0	877.3	9.5	RSK508500	863 x 8.40
870.0	897.3	9.5	RSK508700	883 x 8.40
880.0	907.3	9.5	RSK508800	893 x 8.40
885.0	912.3	9.5	RSK508850	898 x 8.40

Rod Dia.	Groove Dia.	Groove Width	TSS Part No.	O-Ring Size
d_N f8/h9	D_1 H9	L_1 +0.2		
890.0	917.3	9.5	RSK508900	903 x 8.40
930.0	957.3	9.5	RSK509300	943 x 8.40
955.0	982.3	9.5	RSK509550	968 x 8.40
1000.0	1038.0	13.8	RSK6X1000	1016 x 12.00
1035.0	1073.0	13.8	RSK6X1035	1051 x 12.00
1040.0	1067.3	9.5	RSK5X1040	1052 x 8.40
1040.0	1078.0	13.8	RSK6X1040	1056 x 12.00
1050.0	1077.3	9.5	RSK5X1050	1062 x 8.40
1050.0	1088.0	13.8	RSK6X1050	1066 x 12.00
1100.0	1138.0	13.8	RSK6X1100	1116 x 12.00
1120.0	1147.3	9.5	RSK5X1120	1132 x 8.40
1120.0	1158.0	13.8	RSK6X1120	1136 x 12.00
1200.0	1227.3	9.5	RSK5X1200	1212 x 8.40
1200.0	1238.0	13.8	RSK6X1200	1216 x 12.00
1330.0	1368.0	13.8	RSK6X1330	1346 x 12.00
1500.0	1538.0	13.8	RSK6X1500	1516 x 12.00
1600.0	1638.0	13.8	RSK6X1600	1616 x 12.00
2000.0	2038.0	13.8	RSK6X2000	2016 x 12.00
2600.0	2638.0	13.8	RSK6X2600	2616 x 12.00

The rod diameters in **bold** type are in accordance with the recommendations of ISO 3320.

Other dimensions and all intermediate sizes up to 2600 mm diameter including imperial (inch) sizes can be supplied.

All O-Rings with 12 mm cross section are delivered as special profile ring.

Turcon® Stepseal® V

Single-acting

Rubber-energized plastic-faced seal

Material:
Turcon®, Zurcon® and Elastomer

Turcon® Stepseal® V*

Description

Stepseal® V is based on the dynamic, unidirectional Turcon® Stepseal® sealing concept. During the extending stroke of the rod, the contact force on the sealing edge creates high local sealing pressure and limits the micro fluid film formation under the seal. When the rod is retracted, the Stepseal® sealing face supports hydrodynamic back-pumping of the fluid film, and ensures leak-free sealing efficiency with low friction and long service life.

In long-stroke cylinders and equipment operating with low speed during retraction, it has been found that hydrodynamic back-pumping may become insufficient to prevent build-up of pressure in the seal system behind the primary seal. Pressure build-up in the seal system leads to leakage, increased friction and wear, and may ultimately require replacement of the seals. The usual precaution in such equipment has been to provide space for a buffer volume behind the primary seal or to install a drain line.

First invented by Trelleborg Sealing Solutions, the built-in check valve function eliminates pressure build-up and so render buffer volumes and drain lines obsolete.

Stepseal® V has the efficient seal performance and outstanding service life of the Turcon® Stepseal® range and the reliable prevention of pressure build-up brought by a refined check valve function. Stepseal® V is available in high-grade Turcon® or Zurcon® materials with outstanding sliding and wear resistance properties.

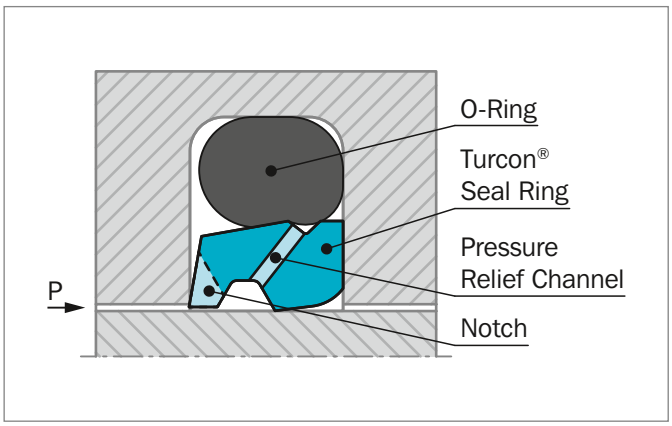

Figure 23: Turcon® Stepseal® V with tight axial groove fit

ADVANTAGES

- Check valve function of O-Ring eliminates risk of fluid bypassing the seal during pressure loading when pressurized
- No system pressure on secondary sealing element and/or Excluder®
- Independent of any speed relation of counter surface
- Independent of stroke length
- Independent of deflection
- Minimum contribution of friction of secondary sealing element and/or Excluder®
- Minimum wear of secondary sealing element and/or Excluder®
- Increased leakage control
- Prolonged seal life
- Increased operational reliability
- Fits standard Stepseal® 2K groove dimensions as well as ISO 7425 seal housings

APPLICATION EXAMPLES

- Mobile hydraulics
- Construction equipment
- Crane boom cylinders
- Presses
- Injection molding machines
- Clamp cylinders
- Wind power cylinders
- Long stroke cylinders
- Waterpower cylinders
- Storm barrier cylinders
- Tensioner cylinders
- Theater hydraulics
- Safety systems

* Patent DE 9654357; 24. 2. 996

CHARACTERISTICS

- Primary seal with hydrostatic ventilation
- Check valve function
- Hydrodynamic back-pumping
- Stabilized position in the groove
- Prolonged seal life
- Increased leakage control

IMPROVED FRICTION PERFORMANCE

Turcon® Stepseal® V offers a uniform, low friction characteristic to the sealing system throughout its whole life by preventing undefined pressurization of the secondary seal element.

FEATURES

Stepseal® V has been developed to meet continuously increasing demands on sealing systems. In dynamic applications, Stepseal® V brings efficient, reliable sealing performance under even the most demanding service conditions. The high seal efficiency and refined valve function of Stepseal® V eliminates seal system pressure build-up between tandem rod seal configuration and makes buffer volume between the seals a thing of the past.

In rod seal systems, Stepseal® V is preferably used together with a secondary seal from the range of Turcon® and Zurcon® rod seals, or with only a double-acting Turcon® Excluder® or Scraper.

Applied as a piston seal, Stepseal® V is used with a double-acting seal from the Turcon® range of piston seals. Under extreme performance requirements Stepseal® V offers improved leakage control, extended service life and increased reliability.

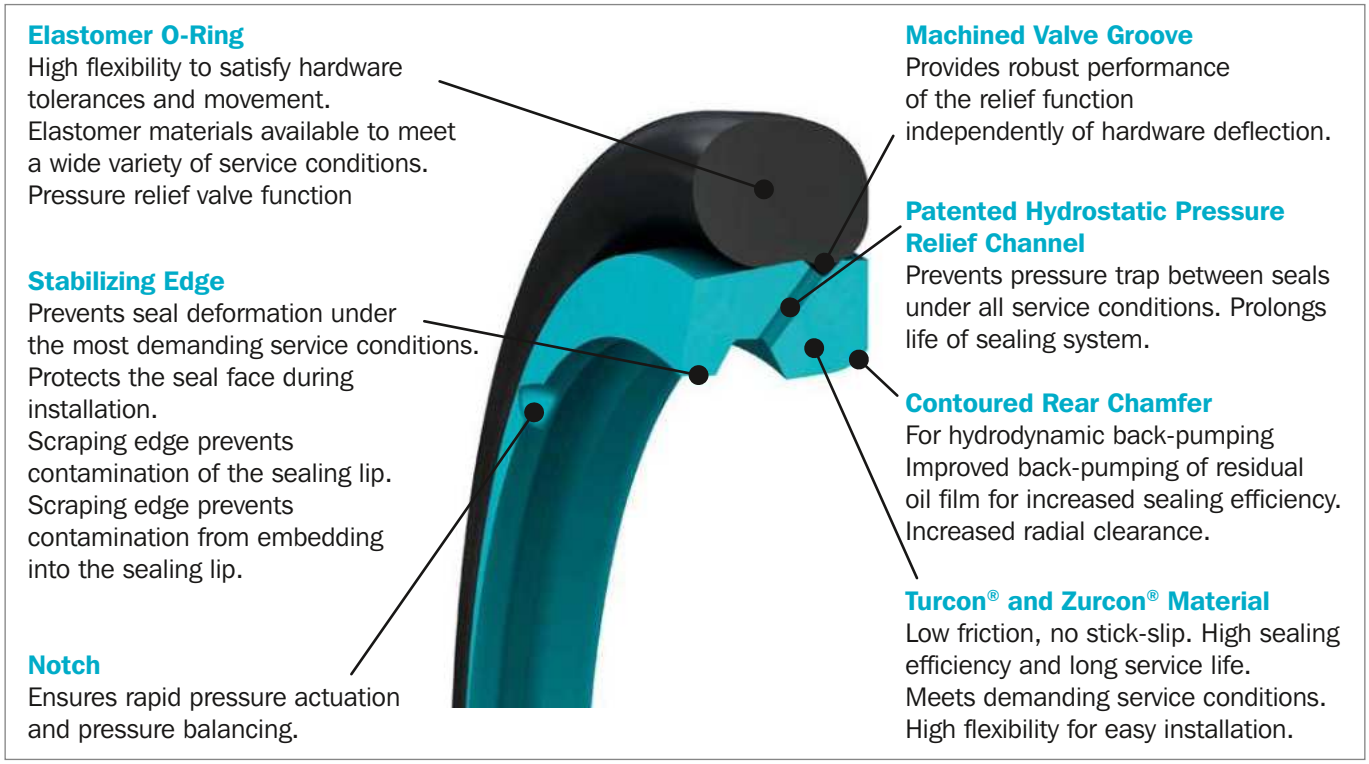

Figure 24: Turcon® Stepseal® V design features

OPERATING CONDITIONS

Pressure:	Up to 50 MPa (Turcon® M12) Up to 60 MPa (Turcon® T08 and Zurcon® Z51*
Speed:	Up to 15 m/s with linear movements, frequency up to 15 Hz
Temperature:	-45 °C to +200 °C depending on seal and O-Ring material
Media:	Mineral oil based hydraulic fluids, flame retardant hydraulic fluids, environmentally friendly hydraulic fluids (bio-oils), phosphate ester, water and others, depending on the seal and O-Ring material - see Table 15.
Clearance:	The maximum permissible radial clearance S_{max} is shown in Table 16, as a function of the operating pressure and functional diameter.

IMPORTANT NOTE

The above data are maximum values and cannot be used at the same time, e.g. the maximum operating speed depends on material type, pressure, temperature and gap value. Temperature range also depends on media.

SERIES

Different cross section sizes are recommended as a function of the seal diameters. Table 14 shows the relationship between the series number according to the seal diameter range and the different application class sizes:

Standard application:	General applications without exceptional operating conditions.
Light application:	Applications with demands for reduced friction or for smaller grooves.
Heavy-duty application:	For exceptional operating loads such as high pressures, pressure peaks, etc.

Table 14: Available Range

Series No.	Rod Diameter d_N f8/h9
RSV20	12.0 - 455.0
RSV30	12.0 - 655.0
RSV40	38.0 - 655.0
RSV80	140.0 - 999.9
RSV50	160.0 - 999.9
RSV5X	1000.0 - 1200.0
RSV60	650.0 - 999.9
RSV6X	1000.0 - 2600.0

For the Standard Recommendations Application range see Table 14.

REDUNDANT SEALING SYSTEM

In many applications, secondary seal systems are needed. Figure 25 shows such a tandem configuration with the Stepseal® V.

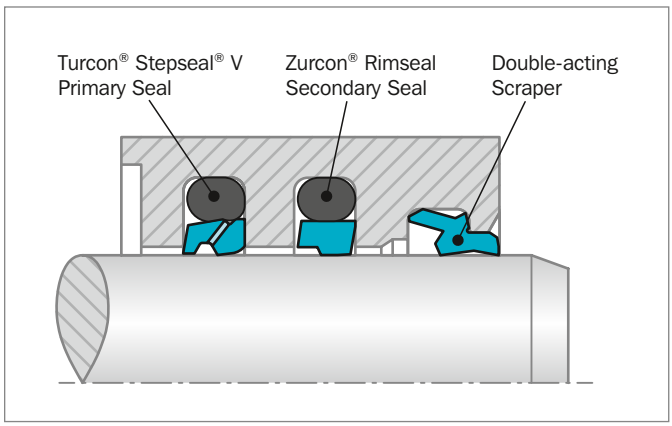

Figure 25: Turcon® Stepseal® 2K and Zurcon® Rimseal in tandem configuration

For Stepseal® V with valve function, there will be no pressure trap between the primary and secondary seals and no extra space between them is required to accumulate hydraulic fluid.

Depending on the application and the operating conditions, the combination of different materials offers a further improvement in the sealing efficiency and the service life of the system. For example in hydraulic cylinders subject to high loads and under rough operating conditions the primary seal should be made of Turcon® and the secondary seal of Zurcon® .

INSTALLATION INSTRUCTIONS

Stepseal® V is installed according to information on page 31 to 32

Closed groove installation applies the same dimensions as for Turcon® Stepseal® 2K in Table 6 page 32.

RECOMMENDED MATERIALS

The following material combinations have proven effective for hydraulic applications:

Turcon® Stepseal® V in Turcon® M12
All-round material for light to heavy hydraulic applications with linear, short stroke or helical movements in mineral oils, flame retardant hydraulic fluids, phospate ester, bio-oils or fluids with low lubricating properties:

O-Ring:	NBR 70 Shore A	N
	FKM 70 Shore A	V

Set code: M12N or M12V

Turcon® Stepseal® V in Turcon® T46
For medium to heavy applications with linear movements in mineral oils and other media with good lubrication:

O-Ring:	NBR 70 Shore A	N
	FKM 70 Shore A	V

Set code: T46N or T46V

For specific applications, all Turcon® materials are available.

Other material combinations are listed in Table 15.

Table 15: Turcon® and Zurcon® Materials for Stepseal® V

Material, Applications, Properties	Code	O–Ring Material Shore A	Code	O-Ring Operating Temp.* °C	Mating Surface Material	MPa max. Dynamic
Turcon® M12 First material choice for seals in linear motion Overall improved properties For new constructions and updating For all commonly applied hydraulic fluids including fluids with low lubrication performance Lowest friction and best sliding properties Lowest wear on seals Improved absorption of abrasive contaminants Low wear or abrasion of counter surface BAM tested Mineral fiber and Additives filled Color: Dark gray	M12	NBR 70	N	-30 to +100	Steel Steel hardened Steel chrome plated (rod) Steel plated (rod) Cast iron Stainless steel Titanium	50
		NBR 70 Low temp.	T	-45 to +80		
		FKM 70	V	-10 to +200		
Turcon® T05 For lubricating fluids Also for gas service Very low friction Very good sliding and sealing properties Color: Turquoise	T05	NBR 70	N	-30 to +100	Steel Steel hardened Steel chrome plated (rod)	20
		NBR 70 Low temp.	T	-45 to +80		
		FKM 70	V	-10 to +200		
Turcon® T08 For lubricating fluids and linear motion Very high compressive strength and extrusion resistance Hard counter surfaces are recommended Bronze filled Color: Light to dark brown, which may have variations in shading	T08	NBR 70	N	-30 to +100	Steel hardened Steel chrome plated (rod) Cast iron	60
		NBR 70 Low temp.	T	-45 to +80		
		FKM 70	V	-10 to +200		
Turcon® T10 For hydraulic and pneumatic For lubricating and non-lubricating fluids High extrusion resistance Good chemical resistance Not for electrically conducting fluids BAM tested Carbon, graphite filled Color: Black	T10	NBR 70	N	-30 to +100	Steel Steel hardened Steel chrome plated (rod) Stainless steel	40
		NBR 70 Low temp.	T	-45 to +80		
		FKM 70	V	-10 to +200		
		EPDM 70	E**	-45 to +145		
Turcon® T29 For lubricating and non-lubricating fluids Good extrusion resistance Surface texture is not suitable for gas sealing Not for electrically conducting fluids Carbon fiber filled Color: Gray	T29	NBR 70	N	-30 to +100	Steel Steel hardened Steel chrome plated (rod) Cast iron Stainless steel	30
		NBR 70 Low temp.	T	-45 to +80		
		FKM 70	V	-10 to +200		
		EPDM 70	E**	-45 to +145		

Table continues on next page

Material, Applications, Properties	Code	O–Ring Material Shore A	Code	O-Ring Operating Temp.* °C	Mating Surface Material	MPa max. Dyna-mic
Turcon® T40 For lubricating and non-lubricating fluids High frequency and short strokes Water hydraulics Surface texture is not suitable for gas sealing Carbon fiber filled Color: Gray	T40	NBR 70	N	-30 to +100	Steel Steel hardened Steel chrome plated (rod) Cast iron Stainless steel Aluminum	25
		NBR 70 Low temp.	T	-45 to +80		
		FKM 70	V	-10 to +200		
		EPDM 70	E**	-45 to +145		
Turcon® T46 For lubricated hydraulics in linear motion High compressive strength High extrusion resistance Very good sliding and wear properties BAM tested Bronze filled Color: Light to dark brown, which may have variations in shading	T46	NBR 70	N	-30 to +100	Steel hardened Steel chrome plated (rod) Cast iron	50
		NBR 70 Low temp.	T	-45 to +80		
		FKM 70	V	-10 to +200		
Zurcon® Z51*** For mineral oil based fluids Very high abrasion and extrusion resistance For counter surface with rougher surface finish Limited chemical resistance Max. working temperature +110 °C Cast polyurethane Color: Yellow to light-brown	Z51	NBR 70	N	-30 to +100	Steel Steel hardened Steel chrome plated (rod) Cast iron Stainless steel Ceramic coating	60
		NBR 70 Low temp.	T	-45 to +80		
Zurcon® Z80 For lubricating and non-lubricating fluids Water based fluids, air and gases Dry air pneumatics High abrasion and extrusion resistance For service in abrasive conditions and media with particles Good chemical resistance Limited temperature capability (-60 to +80 °C) UHMWPE (Ultra High Molecular Weight Polyethylene) Color: White to off-white	Z80	NBR 70	N	-30 to (+100)	Steel Steel hardened Steel chrome plated (rod) Stainless steel Aluminum Ceramic coating	35
		NBR 70 Low temp.	T	-45 to +80		
		EPDM 70	E**	-45 to (+145)		

* The O-Ring operation temperature is only valid in mineral hydraulic oil (except EPDM).

** Material not suitable for mineral oils.

*** Max. diameter 2200 mm.

BAM: Tested by "Bundesanstalt Materialprufung, Germany".

Highlighted materials are recommended.

Installation Recommendation

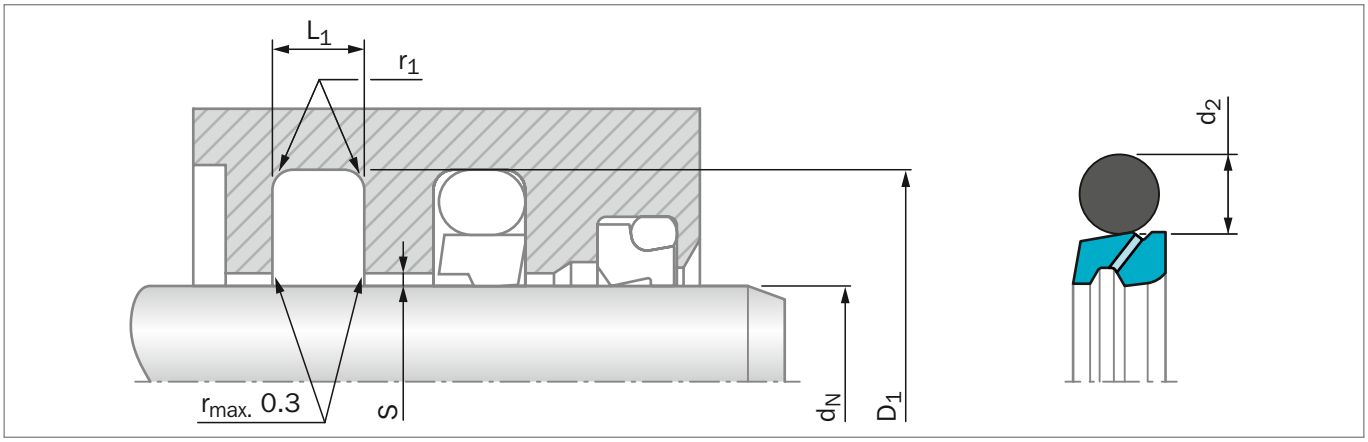

Figure 26: Installation Drawing

Table 16: Installation Dimensions – Standard Recommendations

Series No.	Rod Diameter d_N f8/h9			Groove Diameter	Groove Width	Radius	Radial Clearance S_{max}*			O-Ring Cross Section
	Standard Application	Light Application	Heavy Duty Application	D_1 H9	L_1 +0.2	$r_{1\,max}$	10 MPa	20 MPa	40 MPa	d_2
RSV2	12 – 37.9	38 – 199.9	-	d_N + 10.7	4.2	1.0	0.50	0.30	0.20	3.53
RSV3	38 – 199.9	200 – 255.9	19 – 37.9	d_N + 15.1	6.3	1.3	0.70	0.40	0.25	5.33
RSV4	200 – 255.9	256 – 649.9	38 – 199.9	d_N + 20.5	8.1	1.8	0.80	0.60	0.35	7.00
RSV8	256 – 649.9	650 – 999.9	200 – 255.9	d_N + 24.0	8.1	1.8	0.90	0.70	0.40	7.00
RSV5	650 – 999.9	-	256 – 649.9	d_N + 27.3	9.5	2.5	1.00	0.80	0.50	8.40
RSV5X	-	1000 – 1200	-	d_N + 27.3	9.5	2.5	1.00	0.80	0.50	8.40
RSV6**	-	-	650 – 999.9	d_N + 38.0	13.8	3.0	1.20	0.90	0.60	12.00
RSV6X**	1000 – 2600	-	-	d_N + 38.0	13.8	3.0	1.20	0.90	0.60	12.00

* At pressures > **40 MPa** use diameter tolerance H8/f8 (bore/rod) in the area behind seal or consult your local Trelleborg Sealing Solutions marketing company for alternative material or profiles.
Slydring® / Wear Rings are not applicable at very small radial clearances please consult the Slydring® section in this catalog.

** All O-Rings with 12 mm cross section are delivered as a special profile ring.

ORDERING EXAMPLE

Turcon® Stepseal® V complete with O-Ring, standard application:

Series:	RSV4 from Table 16
Rod diameter:	d_N = 250.0 mm
TSS Part No.:	RSV402500 from Table 17

Select the material from Table 15. The corresponding code numbers are appended to the TSS Part No. Together these form the TSS Article Number. The TSS Article Number for all intermediate sizes can be determined by following the example:

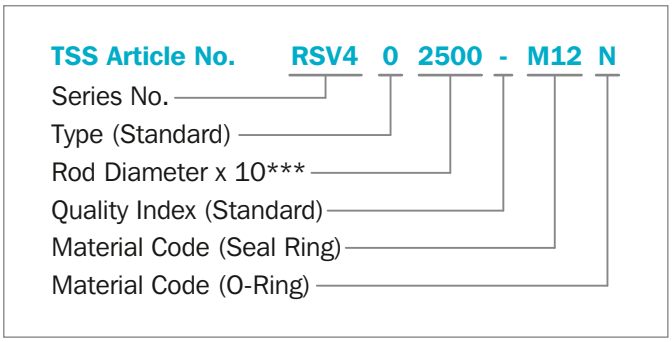

*** For diameters $d_N \geq$ 1000.0 mm multiply only by factor 1.
Example: RSV6 for diameter d_N = 1200.0 mm.
TSS Article No.: RSV6**X1200** -M12N

Table 17: Installation Dimensions / TSS Part No.

Rod Dia. d_N f8/h9	Groove Dia. D_1 H9	Groove Width L_1 +0.2	TSS Part No.	O-Ring Size
12.0	**22.7**	**4.2**	**RSV200120**	**17.04 x 3.53**
15.0	25.7	4.2	RSV200150	18.66 x 3.53
19.0	29.7	4.2	RSV200190	23.40 x 3.53
20.0	**30.7**	**4.2**	**RSV200200**	**25.00 x 3.53**
22.0	**32.7**	**4.2**	**RSV200220**	**26.58 x 3.53**
25.0	**35.7**	**4.2**	**RSV200250**	**29.75 x 3.53**
25.4	36.1	4.2	RSV200254	29.75 x 3.53
26.0	36.7	4.2	RSV200260	29.75 x 3.53
28.0	**38.7**	**4.2**	**RSV200280**	**32.92 x 3.53**
30.0	40.7	4.2	RSV200300	34.52 x 3.53
32.0	**42.7**	**4.2**	**RSV200320**	**36.09 x 3.53**
35.0	45.7	4.2	RSV200350	37.69 x 3.53
36.0	**46.7**	**4.2**	**RSV200360**	**40.87 x 3.53**
37.0	47.7	4.2	RSV200370	40.87 x 3.53
38.0	48.7	4.2	RSV200380	40.87 x 3.53
38.0	53.1	6.3	RSV300380	43.82 x 5.33
40.0	**50.7**	**4.2**	**RSV200400**	**44.04 x 3.53**
40.0	**55.1**	**6.3**	**RSV300400**	**43.82 x 5.33**
42.0	52.7	4.2	RSV200420	47.22 x 3.53
42.0	57.1	6.3	RSV300420	46.99 x 5.33
43.0	53.7	4.2	RSV200430	47.22 x 3.53
44.45	59.5	6.3	RSV300444	50.17 x 5.33
45.0	**55.7**	**4.2**	**RSV200450**	**50.39 x 3.53**
45.0	**60.1**	**6.3**	**RSV300450**	**50.17 x 5.33**
48.0	58.7	4.2	RSV200480	53.57 x 3.53
48.0	63.1	6.3	RSV300480	53.34 x 5.33
50.0	**60.7**	**4.2**	**RSV200500**	**53.57 x 3.53**
50.0	**65.1**	**6.3**	**RSV300500**	**56.52 x 5.33**
50.8	61.5	4.2	RSV200508	53.57 x 3.53
50.8	65.9	6.3	RSV300508	56.52 x 5.33
52.0	62.7	4.2	RSV200520	56.74 x 3.53
52.0	67.1	6.3	RSV300520	56.52 x 5.33
54.0	69.1	6.3	RSV300540	59.69 x 5.33
55.0	65.7	4.2	RSV200550	59.92 x 3.53
55.0	70.1	6.3	RSV300550	59.69 x 5.33
56.0	**66.7**	**4.2**	**RSV200560**	**59.92 x 3.53**
56.0	**71.1**	**6.3**	**RSV300560**	**62.87 x 5.33**
57.1	67.8	4.2	RSV200571	59.92 x 3.53
59.0	69.7	4.2	RSV200590	63.09 x 3.53

Rod Dia. d_N f8/h9	Groove Dia. D_1 H9	Groove Width L_1 +0.2	TSS Part No.	O-Ring Size
60.0	70.7	4.2	RSV200600	63.09 x 3.53
60.0	75.1	6.3	RSV300600	66.04 x 5.33
63.0	**73.7**	**4.2**	**RSV200630**	**66.27 x 3.53**
63.0	**78.1**	**6.3**	**RSV300630**	**69.22 x 5.33**
63.5	78.6	6.3	RSV300635	69.22 x 5.33
65.0	75.7	4.2	RSV200650	69.44 x 3.53
65.0	80.1	6.3	RSV300650	69.22 x 5.33
67.0	77.7	4.2	RSV200670	72.62 x 3.53
69.0	84.1	6.3	RSV300690	75.57 x 5.33
70.0	**80.7**	**4.2**	**RSV200700**	**75.79 x 3.53**
70.0	**85.1**	**6.3**	**RSV300700**	**75.57 x 5.33**
70.0	**90.5**	**8.1**	**RSV400700**	**78 x 7.00**
72.0	82.7	4.2	RSV200720	75.79 x 3.53
73.0	88.1	6.3	RSV300730	78.74 x 5.33
75.0	85.7	4.2	RSV200750	78.97 x 3.53
75.0	90.1	6.3	RSV300750	81.92 x 5.33
75.0	95.5	8.1	RSV400750	83 x 7.00
76.2	91.3	6.3	RSV300762	81.92 x 5.33
78.0	93.1	6.3	RSV300780	85.09 x 5.33
78.0	98.5	8.1	RSV400780	86 x 7.00
80.0	**90.7**	**4.2**	**RSV200800**	**85.32 x 3.53**
80.0	**95.1**	**6.3**	**RSV300800**	**85.09 x 5.33**
80.0	**100.5**	**8.1**	**RSV400800**	**88 x 7.00**
82.5	97.6	6.3	RSV300825	88.27 x 5.33
83.0	93.7	4.2	RSV200830	88.49 x 3.53
85.0	95.7	4.2	RSV200850	88.49 x 3.53
85.0	100.1	6.3	RSV300850	91.44 x 5.33
85.0	105.5	8.1	RSV400850	93 x 7.00
89.0	104.1	6.3	RSV300890	94.62 x 5.33
90.0	**100.7**	**4.2**	**RSV200900**	**94.84 x 3.53**
90.0	**105.1**	**6.3**	**RSV300900**	**94.62 x 5.33**
90.0	**110.5**	**8.1**	**RSV400900**	**98 x 7.00**
92.0	102.7	4.2	RSV200920	98.02 x 3.53
92.0	107.1	6.3	RSV300920	97.79 x 5.33
95.0	105.7	4.2	RSV200950	101.19 x 3.53
95.0	110.1	6.3	RSV300950	100.97 x 5.33
95.0	115.5	8.1	RSV400950	103 x 7.00
100.0	**110.7**	**4.2**	**RSV201000**	**104.37 x 3.53**
100.0	**115.1**	**6.3**	**RSV301000**	**107.32 x 5.33**

Rod Dia. d_N f8/h9	Groove Dia. D_1 H9	Groove Width L_1 +0.2	TSS Part No.	O-Ring Size
100.0	**120.5**	**8.1**	**RSV401000**	**108 x 7.00**
101.6	116.7	6.3	RSV301016	107.32 x 5.33
105.0	120.1	6.3	RSV301050	110.49 x 5.33
105.0	125.5	8.1	RSV401050	113.67 x 7.00
110.0	120.7	4.2	RSV201100	113.89 x 3.53
110.0	**125.1**	**6.3**	**RSV301100**	**116.84 x 5.33**
110.0	**130.5**	**8.1**	**RSV401100**	**116.84 x 7.00**
115.0	130.1	6.3	RSV301150	120.02 x 5.33
120.0	135.1	6.3	RSV301200	126.37 x 5.33
120.0	140.5	8.1	RSV401200	129.54 x 7.00
125.0	**140.1**	**6.3**	**RSV301250**	**129.54 x 5.33**
125.0	**145.5**	**8.1**	**RSV401250**	**132.72 x 7.00**
125.4	140.5	6.3	RSV301254	132.72 x 5.33
127.0	142.1	6.3	RSV301270	132.72 x 5.33
130.0	145.1	6.3	RSV301300	135.89 x 5.33
130.0	150.5	8.1	RSV401300	139.07 x 7.00
132.0	147.1	6.3	RSV301320	139.07 x 5.33
135.0	145.7	4.2	RSV201350	139.29 x 3.53
135.0	150.1	6.3	RSV301350	142.24 x 5.33
137.0	152.1	6.3	RSV301370	142.24 x 5.33
138.0	153.1	6.3	RSV301380	142.24 x 5.33
140.0	**150.7**	**4.2**	**RSV201400**	**145.64 x 3.53**
140.0	**155.1**	**6.3**	**RSV301400**	**145.42 x 5.33**
140.0	**160.5**	**8.1**	**RSV401400**	**148.59 x 7.00**
140.5	155.6	6.3	RSV301405	145.42 x 5.33
145.0	160.1	6.3	RSV301450	151.77 x 5.33
145.0	165.5	8.1	RSV401450	151.77 x 7.00
150.0	165.1	6.3	RSV301500	158.12 x 5.33
150.0	170.5	8.1	RSV401500	158.12 x 7.00
153.0	168.1	6.3	RSV301530	158.12 x 5.33
155.0	170.1	6.3	RSV301550	158.12 x 5.33
160.0	**175.1**	**6.3**	**RSV301600**	**164.47 x 5.33**
160.0	**180.5**	**8.1**	**RSV401600**	**170.82 x 7.00**
165.0	180.1	6.3	RSV301650	170.82 x 5.33
170.0	185.1	6.3	RSV301700	177.17 x 5.33
170.0	190.5	8.1	RSV401700	177.17 x 7.00
173.0	188.1	6.3	RSV301730	177.17 x 5.33
175.0	190.1	6.3	RSV301750	183.52 x 5.33
180.0	**195.1**	**6.3**	**RSV301800**	**183.52 x 5.33**

Rod Dia. d_N f8/h9	Groove Dia. D_1 H9	Groove Width L_1 +0.2	TSS Part No.	O-Ring Size
180.0	**200.5**	**8.1**	**RSV401800**	**189.87 x 7.00**
185.0	200.1	6.3	RSV301850	189.87 x 5.33
185.0	205.5	8.1	RSV401850	196.22 x 7.00
190.0	205.1	6.3	RSV301900	196.22 x 5.33
190.0	210.5	8.1	RSV401900	196.22 x 7.00
195.0	210.1	6.3	RSV301950	202.57 x 5.33
200.0	**215.1**	**6.3**	**RSV302000**	**208.92 x 5.33**
200.0	**220.5**	**8.1**	**RSV402000**	**208.90 x 7.00**
205.0	225.5	8.1	RSV402050	215.27 x 7.00
210.0	230.5	8.1	RSV402100	215.27 x 7.00
211.0	231.5	8.1	RSV402110	215.27 x 7.00
212.0	232.5	8.1	RSV402120	227.97 x 7.00
215.0	235.5	8.1	RSV402150	227.97 x 7.00
220.0	**240.5**	**8.1**	**RSV402200**	**227.97 x 7.00**
225.0	**245.5**	**8.1**	**RSV402250**	**240.67 x 7.00**
230.0	245.1	6.3	RSV302300	234.32 x 5.33
230.0	250.5	8.1	RSV402300	240.67 x 7.00
235.0	255.5	8.1	RSV402350	240.67 x 7.00
240.0	260.5	8.1	RSV402400	253.37 x 7.00
245.0	265.5	8.1	RSV402450	253.37 x 7.00
250.0	**270.5**	**8.1**	**RSV402500**	**266.07 x 7.00**
260.0	284.0	8.1	RSV802600	266.07 x 7.00
265.0	289.0	8.1	RSV802650	278.77 x 7.00
270.0	290.5	8.1	RSV402700	278.77 x 7.00
270.0	294.0	8.1	RSV802700	278.77 x 7.00
275.0	299.0	8.1	RSV802750	291.47 x 7.00
280.0	**304.0**	**8.1**	**RSV802800**	**291.47 x 7.00**
285.0	309.0	8.1	RSV802850	291.47 x 7.00
290.0	314.0	8.1	RSV802900	304.17 x 7.00
295.0	319.0	8.1	RSV802950	304.17 x 7.00
300.0	320.5	8.1	RSV403000	304.17 x 7.00
300.0	324.0	8.1	RSV803000	316.87 x 7.00
310.0	334.0	8.1	RSV803100	316.87 x 7.00
320.0	**344.0**	**8.1**	**RSV803200**	**329.57 x 7.00**
330.0	354.0	8.1	RSV803300	342.27 x 7.00
340.0	364.0	8.1	RSV803400	354.97 x 7.00
350.0	370.5	8.1	RSV403500	354.97 x 7.00
350.0	374.0	8.1	RSV803500	367.67 x 7.00
360.0	**384.0**	**8.1**	**RSV803600**	**367.67 x 7.00**

Rod Dia. d_N f8/h9	Groove Dia. D_1 H9	Groove Width L_1 +0.2	TSS Part No.	O-Ring Size
365.0	389.0	8.1	RSV803650	380.37 x 7.00
370.0	394.0	8.1	RSV803700	380.37 x 7.00
375.0	399.0	8.1	RSV803750	393.07 x 7.00
380.0	404.0	8.1	RSV803800	393.07 x 7.00
390.0	414.0	8.1	RSV803900	405.26 x 7.00
400.0	424.0	8.1	RSV804000	417.96 x 7.00
410.0	434.0	8.1	RSV804100	417.96 x 7.00
420.0	444.0	8.1	RSV804200	430.66 x 7.00
430.0	454.0	8.1	RSV804300	443.36 x 7.00
435.0	459.0	8.1	RSV804350	443.36 x 7.00
440.0	464.0	8.1	RSV804400	456.06 x 7.00
450.0	474.0	8.1	RSV804500	468.76 x 7.00
460.0	484.0	8.1	RSV804600	468.76 x 7.00
470.0	494.0	8.1	RSV804700	481.38 x 7.00
480.0	504.0	8.1	RSV804800	494.16 x 7.00
485.0	509.0	8.1	RSV804850	494.16 x 7.00
490.0	514.0	8.1	RSV804900	506.86 x 7.00
500.0	524.0	8.1	RSV805000	506.86 x 7.00
510.0	534.0	8.1	RSV805100	532.26 x 7.00
520.0	544.0	8.1	RSV805200	532.26 x 7.00
525.0	549.0	8.1	RSV805250	532.26 x 7.00
530.0	554.0	8.1	RSV805300	557.66 x 7.00
540.0	564.0	8.1	RSV805400	557.66 x 7.00
550.0	574.0	8.1	RSV805500	557.66 x 7.00
560.0	584.0	8.1	RSV805600	582.68 x 7.00
570.0	594.0	8.1	RSV805700	582.68 x 7.00
580.0	604.0	8.1	RSV805800	608.08 x 7.00
585.0	609.0	8.1	RSV805850	608.08 x 7.00
590.0	614.0	8.1	RSV805900	608.08 x 7.00
600.0	624.0	8.1	RSV806000	608.08 x 7.00
610.0	634.0	8.1	RSV806100	633.48 x 7.00
620.0	644.0	8.1	RSV806200	633.48 x 7.00
630.0	654.0	8.1	RSV806300	658.88 x 7.00
640.0	664.0	8.1	RSV806400	658.88 x 7.00
650.0	677.3	9.5	RSV506500	663 x 8.40
656.0	683.3	9.5	RSV506560	669 x 8.40
660.0	687.3	9.5	RSV506600	673 x 8.40
680.0	707.3	9.5	RSV506800	693 x 8.40
685.0	712.3	9.5	RSV506850	698 x 8.40
700.0	724.0	8.1	RSV807000	713 x 7.00
700.0	727.3	9.5	RSV507000	713 x 8.40

Rod Dia. d_N f8/h9	Groove Dia. D_1 H9	Groove Width L_1 +0.2	TSS Part No.	O-Ring Size
710.0	737.3	9.5	RSV507100	723 x 8.40
730.0	757.3	9.5	RSV507300	743 x 8.40
760.0	787.3	9.5	RSV507600	773 x 8.40
765.0	792.3	9.5	RSV507650	778 x 8.40
780.0	807.3	9.5	RSV507800	793 x 8.40
790.0	817.3	9.5	RSV507900	803 x 8.40
800.0	827.3	9.5	RSV508000	813 x 8.40
810.0	837.3	9.5	RSV508100	823 x 8.40
820.0	847.3	9.5	RSV508200	833 x 8.40
830.0	857.3	9.5	RSV508300	843 x 8.40
850.0	877.3	9.5	RSV508500	863 x 8.40
870.0	897.3	9.5	RSV508700	883 x 8.40
880.0	907.3	9.5	RSV508800	893 x 8.40
885.0	912.3	9.5	RSV508850	898 x 8.40
890.0	917.3	9.5	RSV508900	903 x 8.40
930.0	957.3	9.5	RSV509300	943 x 8.40
955.0	982.3	9.5	RSV509550	968 x 8.40
1000.0	1038.0	13.8	RSV6X1000	1017 x 12.0
1035.0	1073.0	13.8	RSV6X1035	1052 x 12.0
1040.0	1067.3	9.5	RSV5X1040	1053 x 8.40
1040.0	1078.0	13.8	RSV6X1040	1057 x 12.0
1050.0	1077.3	9.5	RSV5X1050	1063 x 8.40
1050.0	1088.0	13.8	RSV6X1050	1067 x 12.0
1100.0	1138.0	13.8	RSV6X1100	1117 x 12.0
1120.0	1147.3	9.5	RSV5X1120	1133 x 8.40
1120.0	1158.0	13.8	RSV6X1120	1137 x 12.0
1200.0	1227.3	9.5	RSV5X1200	1213 x 8.40
1200.0	1238.0	13.8	RSV6X1200	1217 x 12.0
1330.0	1368.0	13.8	RSV6X1330	1347 x 12.0
1500.0	1538.0	13.8	RSV6X1500	1517 x 12.0
1600.0	1638.0	13.8	RSV6X1600	1617 x 12.0
2000.0	2038.0	13.8	RSV6X2000	2017 x 12.0
2600.0	2638.0	13.8	RSV6X2600	2617 x 12.0

The rod diameters in **bold** type are in accordance with the recommendations of ISO 3320.

Other dimensions and all intermediate sizes up to 2600 mm diameter including imperial (inch) sizes can be supplied.

All O-Rings with 12 mm cross section are delivered as special profile ring.

Zurcon® Rimseal

Single-acting

Rubber-energized plastic-faced seal

Material:
Zurcon® and Elastomer

■ Zurcon® Rimseal*

■ Description

When the application requirements make high demands on leakage control and reliability, a redundant sealing system is necessary to ensure reliable sealing of hydraulic cylinders at the piston rod.

METHOD OF OPERATION

Zurcon® Rimseal is an elastomer energized seal element. The changes in seal position in the groove, necessary for optimum sealing function, are guaranteed by the combination of the two parts: the O-Ring and seal ring.

In order to achieve a contact force increasing sealing effect with increasing pressure, the seal has a chamfer on the low pressure side which causes the seal to tilt slightly so that the seal ring is forced against the side of the groove. This creates an area of maximum pressure at the edge of the seal.

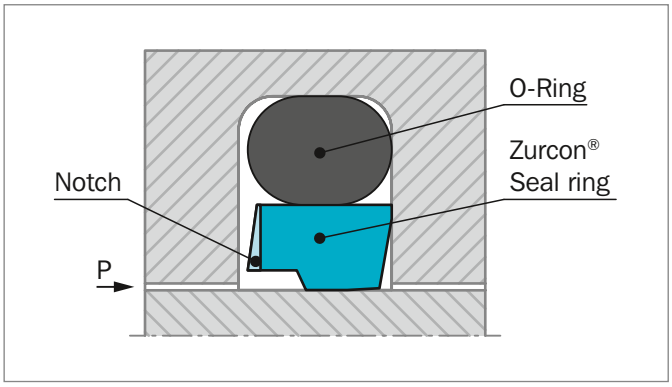

Figure 27: Zurcon® Rimseal

When Zurcon® Rimseal is used in a system with a double-acting scraper DA 24 (DA 22, DA 17, DA 27, Excluder® 2 resp. 5 or 500), the sealing function of the system must be assured even if pressure build-up occurs between Rimseal and the double-acting scraper.

The high-pressure side of the seal ring also has a chamfer which, in the event of a build-up of pressure behind Rimseal, comes into contact with the flank of the groove. Rimseal moves in the groove so that a contact pressure distribution is obtained on the rod which enhances the back-pumping effect.

ADVANTAGES

- High static and dynamic sealing effect
- Low friction for reduced power loss
- High wear resistance for long service life
- Small groove
- Easy installation
- ISO 7425-2 grooves optional
- Available for any diameter from 8 to 2200 mm

APPLICATION EXAMPLES

- Mobile hydraulics
- Standard cylinders
- Machine tools
- Injection molding machines
- Presses

OPERATING CONDITIONS:

Pressure:	In tandem system: Up to 60 MPa As an individual element: 25 MPa
Velocity:	5 m/s with short strokes <1 m in tandem system
Temperature:	-45 °C to +110 °C depending on O-Ring material
Media:	Hydraulic fluids - Mineral oil - Synthetic and natural esters - HEES, HETG up to +60 °C - Flame retardant fluids HFA, HFC
Clearance:	The maximum permissible radial clearance S_{max} is shown in Table 18, as a function of the operating pressure and functional diameter.

IMPORTANT NOTE

The above data are maximum values and cannot be used at the same time, e.g. the maximum operating speed depends on material type, pressure, temperature and gap value. Temperature range also depends on media.

* Patent No.: EP 0 670 444

SERIES

Zurcon® Rimseal is a system seal and is preferably used in tandem sealing systems in conjunction with Stepseal® 2K. For this reason the type series are identical with those for Stepseal® 2K.

Table 18 shows the relationship between the series number according to the seal diameter range and the different application class sizes:

Standard application	RR13
Light application	RR15
Heavy-duty application	RR11

REDUNDANT SEALING SYSTEM

Redundant sealing systems are used where the application conditions no longer permit reliable sealing over the demanded service life with a single seal.

The tandem sealing system is particularly important during cold starts when, due to the very high viscosity of the oil, the primary seal allows oil to pass as the piston rod is extended. In the tandem system the oil is heated as a result of the friction at the primary seal and is then reliably wiped off - at a now lower viscosity - by the secondary seal, the Zurcon® Rimseal.

As the piston rod is retracted, the oil is stored in the reservoir between the seals, and is then pumped back against the system pressure by the hydrodynamics in the seal clearance of Stepseal® 2K.

Particularly with strokes of more than 1 meter, measures have to be taken to provide a storage chamber between the seals.

Rimseal is designed to have the back-pumping effect necessary when using a double-acting scraper in the rod sealing system.

Figure 28 shows a redundant rod seal system consisting of Stepseal® 2K, Rimseal and Scraper DA 22 with corresponding wear ring arrangement.

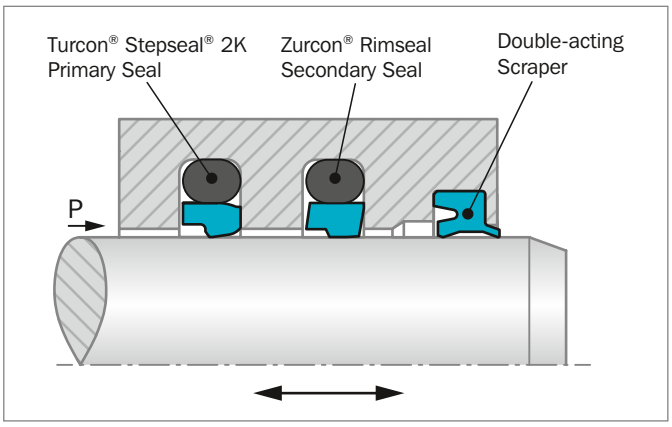

Figure 28: Zurcon® Rimseal in tandem configuration

The optimum rod sealing system for hydraulic cylinders subject to heavy loads should consist of three elements:

1) Turcon® Stepseal® 2K used as a primary seal. This seal element offers the back-pumping property necessary for redundant rod seal systems.

2) Zurcon® Rimseal as the secondary seal in this system to ensure reliable sealing of thin oil films at low secondary pressures. A Zurcon® material (polyurethane Shore D 58) is used combined with a new seal profile.

3) The final outer element of the redundant sealing system is a double-acting scraper seal (e.g. DA24, DA 22, DA 17, DA 27. Turcon® Excluder® 2 resp. 5 or Zurcon® Excluder® 500).

The sealing system thus consists of three independent lip seals installed in line, in which the hardness of the material decreases from the pressure side to the atmospheric side.

INSTALLATION INSTRUCTIONS

Zurcon® Rimseal is installed according to information at page 31 and 32.

Closed groove installation applies the same dimensions as Turcon® Stepseal® 2K in Table 2 page 29.

MATERIAL

Zurcon® Rimseal in Zurcon® Z52
For light to heavy applications with linear movements in mineral oils and other media according to the Technical Data. Rimseal in Zurcon® Z52, special polyurethane 58 Shore D, is available in the following material combinations as standard:

O-Ring:	NBR 70 Shore A	N
	NBR 70 Shore A Low temp.	T

Set code: Z52N or Z52T

Installation Recommendation

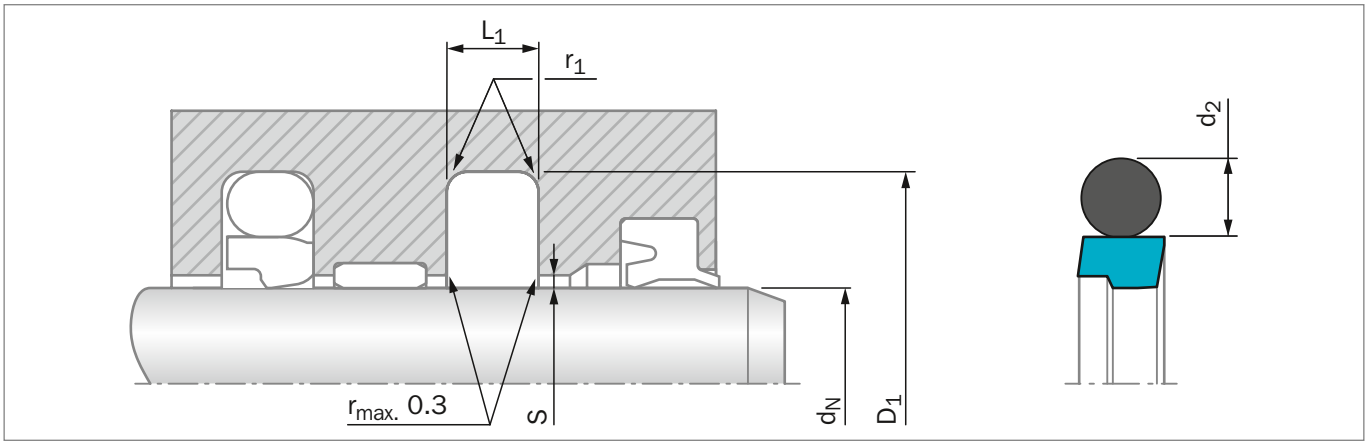

Figure 29: Installation Drawing

Table 18: Installation Dimensions – Standard Recommendations

Rod Diameter d_N f8/h9			Groove Diameter	Groove Width	Radius	Radial Clearance S_{max}*		O-Ring Cross Section
Series No. RR 13 Standard Application	**Series No. RR 15 Light Application**	**Series No. RR 11 Heavy Duty Application**	D_1 H9	L_1 +0.2	$r_{1\,max}$	**10 MPa**	**20 MPa**	d_2
8 - 18.9	19 - 37.9	-	d_N + 7.3	3.2	0.6	0.40	0.25	2.62
19 - 37.9	38 - 199.9	8 - 18.9	d_N + 10.7	4.2	1.0	0.40	0.25	3.53
38 - 199.9	200 - 255.9	19 - 37.9	d_N + 15.1	6.3	1.3	0.50	0.30	5.33
200 - 255.9	256 - 649.9	38 - 199.9	d_N + 20.5	8.1	1.8	0.60	0.35	7.00
256 - 649.9	650 - 999.9	200 - 255.9	d_N + 24.0	8.1	1.8	0.60	0.35	7.00
650 - 999.9	1000 - 2200	256 - 649.9	d_N + 27.3	9.5	2.5	0.70	0.50	8.40
1000 - 2200	-	650 - 999.9	d_N + 38.0	13.8	3.0	1.00	0.70	12.00**

Installation in closed grooves from diameters > 18 mm. Also for installation according to ISO 7425-2.
* Installed as secondary seal utilize S_{max} of the primary seal.
**All O-Rings with 12 mm cross section are delivered as a special profile ring.

ORDERING EXAMPLE

Zurcon® Rimseal complete with O-Ring, standard application:

Series:	RR13 from Table 18
Rod diameter:	d_N = 80.0 mm
TSS Part No.:	RR1300800 from Table 19

Select material Z52. The corresponding code numbers are appended to the TSS Part No. Together these form the TSS Article Number. The TSS Article Number for all intermediate sizes can be determind by following the example:

TSS Article No. RR13 0 0800 - Z52 N***

- TSS Series No. — RR13
- Type (Standard) — 0
- Rod Diameter x 10**** — 0800
- Quality Index (Standard) — -
- Material Code (Seal Ring) — Z52
- Material Code (O-Ring) — N

*** Zurcon® Rimseal is always supplied as a set with a Nitrile O-Ring, code N or T. See page 68 O-Ring Code.

**** For diameters $d_N \geq$ 1000.0 mm multiply only by factor 1.
Example: RR13 for diameter d_N = 1200.0 mm.
TSS Article No.: RR13**X1200** - Z52N.

Table 19: Installation Dimensions / TSS Article No.

Rod d_N f8/h9	Groove Dia. D_1 H9	Groove Width L_1 +0.2	TSS Article No.*	O-Ring Size
8.0	**15.3**	**3.2**	**RR1300080-Z52N**	**10.77 x 2.62**
10.0	**17.3**	**3.2**	**RR1300100-Z52N**	**12.37 x 2.62**
12.0	**19.3**	**3.2**	**RR1300120-Z52N**	**13.94 x 2.62**
14.0	**21.3**	**3.2**	**RR1300140-Z52N**	**17.12 x 2.62**
16.0	**23.3**	**3.2**	**RR1300160-Z52N**	**18.72 x 2.62**
18.0	**25.3**	**3.2**	**RR1300180-Z52N**	**20.29 x 2.62**
20.0	27.3	3.2	RR1500200-Z52N	21.89 x 2.62
20.0	**30.7**	**4.2**	**RR1300200-Z52N**	**23.40 x 3.53**
22.0	29.3	3.2	RR1500220-Z52N	25.07 x 2.62
22.0	**32.7**	**4.2**	**RR1300220-Z52N**	**26.58 x 3.53**
25.0	**32.3**	**3.2**	**RR1500250-Z52N**	**26.64 x 2.62**
25.0	**35.7**	**4.2**	**RR1300250-Z52N**	**29.75 x 3.53**
28.0	**35.3**	**3.2**	**RR1500280-Z52N**	**29.82 x 2.62**
28.0	**38.7**	**4.2**	**RR1300280-Z52N**	**32.92 x 3.53**
30.0	37.3	3.2	RR1500300-Z52N	32.99 x 2.62
30.0	40.7	4.2	RR1300300-Z52N	34.52 x 3.53
32.0	**39.3**	**3.2**	**RR1500320-Z52N**	**34.59 x 2.62**
32.0	**42.7**	**4.2**	**RR1300320-Z52N**	**36.09 x 3.53**
35.0	42.3	3.2	RR1500350-Z52N	37.77 x 2.62
35.0	45.7	4.2	RR1300350-Z52N	37.70 x 3.53
36.0	**43.3**	**3.2**	**RR1500360-Z52N**	**39.34 x 2.62**
36.0	**46.7**	**4.2**	**RR1300360-Z52N**	**40.87 x 3.53**
40.0	**50.7**	**4.2**	**RR1500400-Z52N**	**44.04 x 3.53**
40.0	**55.1**	**6.3**	**RR1300400-Z52N**	**43.82 x 5.33**
45.0	**55.7**	**4.2**	**RR1500450-Z52N**	**50.39 x 3.53**
45.0	**60.1**	**6.3**	**RR1300450-Z52N**	**50.17 x 5.33**
50.0	**60.7**	**4.2**	**RR1500500-Z52N**	**53.57 x 3.53**
50.0	**65.1**	**6.3**	**RR1300500-Z52N**	**56.52 x 5.33**
55.0	65.7	4.2	RR1500550-Z52N	59.92 x 3.53
55.0	70.1	6.3	RR1300550-Z52N	59.69 x 5.33
56.0	**71.1**	**6.3**	**RR1300560-Z52N**	**62.87 x 5.33**
60.0	70.7	4.2	RR1500600-Z52N	63.09 x 3.53
60.0	75.1	6.3	RR1300600-Z52N	66.04 x 5.33
63.0	73.7	4.2	RR1500630-Z52N	66.27 x 3.53
63.0	**78.1**	**6.3**	**RR1300630-Z52N**	**69.22 x 5.33**
65.0	80.1	6.3	RR1300650-Z52N	69.22 x 5.33
70.0	**85.1**	**6.3**	**RR1300700-Z52N**	**75.57 x 5.33**
75.0	90.1	6.3	RR1300750-Z52N	81.92 x 5.33
80.0	**90.7**	**4.2**	**RR1500800-Z52N**	**85.32 x 3.53**
80.0	**95.1**	**6.3**	**RR1300800-Z52N**	**85.09 x 5.33**
85.0	100.1	6.3	RR1300850-Z52N	91.44 x 5.33
90.0	**105.1**	**6.3**	**RR1300900-Z52N**	**94.62 x 5.33**

Rod d_N f8/h9	Groove Dia. D_1 H9	Groove Width L_1 +0.2	TSS Article No.*	O-Ring Size
95.0	110.1	6.3	RR1300950-Z52N	100.97 x 5.33
100.0	**115.1**	**6.3**	**RR1301000-Z52N**	**107.32 x 5.33**
105.0	120.1	6.3	RR1301050-Z52N	110.49 x 5.33
110.0	**125.1**	**6.3**	**RR1301100-Z52N**	**116.84 x 5.33**
110.0	**130.5**	**8.1**	**RR1101100-Z52N**	**116.89 x 7.00**
115.0	130.1	6.3	RR1301150-Z52N	120.02 x 5.33
120.0	135.1	6.3	RR1301200-Z52N	126.37 x 5.33
125.0	**140.1**	**6.3**	**RR1301250-Z52N**	**129.54 x 5.33**
125.0	**145.5**	**8.1**	**RR1101250-Z52N**	**132.72 x 7.00**
130.0	145.1	6.3	RR1301300-Z52N	135.89 x 5.33
135.0	150.1	6.3	RR1301350-Z52N	142.24 x 5.33
140.0	**155.1**	**6.3**	**RR1301400-Z52N**	**145.42 x 5.33**
145.0	160.1	6.3	RR1301450-Z52N	151.77 x 7.00
150.0	165.1	6.3	RR1301500-Z52N	158.12 x 5.33
150.0	170.5	8.1	RR1101500-Z52N	158.12 x 7.00
155.0	170.1	6.3	RR1301550-Z52N	158.12 x 5.33
160.0	**175.1**	**6.3**	**RR1301600-Z52N**	**164.47 x 5.33**
160.0	**180.5**	**8.1**	**RR1101600-Z52N**	**170.82 x 7.0**
165.0	180.1	6.3	RR1301650-Z52N	170.82 x 5.33
170.0	185.1	6.3	RR1301700-Z52N	177.17 x 5.33
175.0	190.1	6.3	RR1301750-Z52N	183.52 x 5.33
180.0	**195.1**	**6.3**	**RR1301800-Z52N**	**183.52 x 5.33**
180.0	**200.5**	**8.1**	**RR1101800-Z52N**	**189.87 x 7.00**
185.0	200.1	6.3	RR1301850-Z52N	189.87 x 5.33
190.0	205.1	6.3	RR1301900-Z52N	196.22 x 5.33
200.0	**220.5**	**8.1**	**RR1302000-Z52N**	**208.92 x 7.00**
210.0	230.5	8.1	RR1302100-Z52N	215.27 x 7.00
220.0	**240.5**	**8.1**	**RR1302200-Z52N**	**227.97 x 7.00**
230.0	250.5	8.1	RR1302300-Z52N	240.67 x 7.00
240.0	260.5	8.1	RR1302400-Z52N	253.37 x 7.00
250.0	**270.5**	**8.1**	**RR1302500-Z52N**	**266.07 x 7.00**
260.0	284.0	8.1	RR1302600-Z52N	266.07 x 7.00
280.0	**304.0**	**8.1**	**RR1302800-Z52N**	**291.47 x 7.00**
300.0	324.0	8.1	RR1303000-Z52N	316.87 x 7.00
310.0	334.0	8.1	RR1303100-Z52N	316.87 x 7.00
320.0	**344.0**	**8.1**	**RR1303200-Z52N**	**329.57 x 7.00**
340.0	364.0	8.1	RR1303400-Z52N	354.97 x 7.00
350.0	374.0	8.1	RR1303500-Z52N	367.67 x 7.00
360.0	**384.0**	**8.1**	**RR1303600-Z52N**	**367.67 x 7.00**
380.0	404.0	8.1	RR1303800-Z52N	393.07 x 7.00
400.0	424.0	8.1	RR1304000-Z52N	417.96 x 7.00
420.0	444.0	8.1	RR1304200-Z52N	430.66 x 7.00

Rod d_N f8/h9	Groove Dia. D_1 H9	Groove Width L_1 +0.2	TSS Article No.*	O-Ring Size
450.0	474.0	8.1	RR1304500-Z52N	468.76 x 7.00
480.0	504.0	8.1	RR1304800-Z52N	494.16 x 7.00
500.0	524.0	8.1	RR1305000-Z52N	506.86 x 7.00
600.0	624.0	8.1	RR1306000-Z52N	608.08 x 7.00
610.0	634.0	8.1	RR1306100-Z52N	633.48 x 7.00
620.0	644.0	8.1	RR1306200-Z52N	633.48 x 7.00
630.0	654.0	8.1	RR1306300-Z52N	658.88 x 7.00
640.0	664.0	8.1	RR1306400-Z52N	658.88 x 7.00
650.0	677.3	9.5	RR1306500-Z52N	663.00 x 8.40
656.0	683.3	9.5	RR1306560-Z52N	669.00 x 8.40
660.0	687.3	9.5	RR1306600-Z52N	673.00 x 8.40
680.0	707.3	9.5	RR1306800-Z52N	693.00 x 8.40
685.0	712.3	9.5	RR1306850-Z52N	698.00 x 8.40
700.0	724.0	8.1	RR1507000-Z52N	712.00 x 7.00
700.0	727.3	9.5	RR1307000-Z52N	713.00 x 8.40
710.0	737.3	9.5	RR1307100-Z52N	723.00 x 8.40
730.0	757.3	9.5	RR1307300-Z52N	743.00 x 8.40
760.0	787.3	9.5	RR1307600-Z52N	773.00 x 8.40
765.0	792.3	9.5	RR1307650-Z52N	778.00 x 8.40
780.0	807.3	9.5	RR1307800-Z52N	793.00 x 8.40
790.0	817.3	9.5	RR1307900-Z52N	803.00 x 8.40
800.0	827.3	9.5	RR1308000-Z52N	813.00 x 8.40
810.0	837.3	9.5	RR1308100-Z52N	823.00 x 8.40
820.0	847.3	9.5	RR1308200-Z52N	833.00 x 8.40
830.0	857.3	9.5	RR1308300-Z52N	843.00 x 8.40
850.0	877.3	9.5	RR1308500-Z52N	863.00 x 8.40
870.0	897.3	9.5	RR1308700-Z52N	883.00 x 8.40
880.0	907.3	9.5	RR1308800-Z52N	893.00 x 8.40
885.0	912.3	9.5	RR1308850-Z52N	898.00 x 8.40
890.0	917.3	9.5	RR1308900-Z52N	903.00 x 8.40
930.0	957.3	9.5	RR1309300-Z52N	943.00 x 8.40
955.0	982.3	9.5	RR1309550-Z52N	968.00 x 8.40
1000.0	1038.0	13.8	RR13X1000-Z52N	1016.00 x 12.00
1035.0	1073.0	13.8	RR13X1035-Z52N	1051.00 x 12.00
1040.0	1067.3	9.5	RR15X1040-Z52N	1053.00 x 8.40
1040.0	1078.0	13.8	RR13X1040-Z52N	1056.00 x 12.00
1050.0	1077.3	9.5	RR15X1050-Z52N	1063.00 x 8.40
1050.0	1088.0	13.8	RR13X1050-Z52N	1066.00 x 12.00
1100.0	1138.0	13.8	RR13X1100-Z52N	1116.00 x 12.00
1120.0	1147.3	9.5	RR15X1120-Z52N	1133.00 x 8.40
1120.0	1158.0	13.8	RR13X1120-Z52N	1136.00 x 12.00
1200.0	1227.3	9.5	RR15X1200-Z52N	1213.00 x 8.40
1200.0	1238.0	13.8	RR13X1200-Z52N	1216.00 x 12.00
1330.0	1357.3	9.5	RR15X1330-Z52N	1343.00 x 8.40
1330.0	1368.0	13.8	RR13X1330-Z52N	1346.00 x 12.00
1500.0	1527.3	9.5	RR15X1500-Z52N	1513.00 x 8.40
1500.0	1538.0	13.8	RR13X1500-Z52N	1516.00 x 12.00
1600.0	1638.0	13.8	RR13X1600-Z52N	1616.00 x 12.00
2000.0	2038.0	13.8	RR13X2000-Z52N	2016.00 x 12.00

The rod diameters in **bold** type are in accordance with the recommendations of ISO 3320.

Other dimensions and all intermediate sizes up to 2200 mm diameter including imperial (inch) sizes can be supplied.

* TSS Article Number incl. of NBR O-Ring.
For application of low-temperature O-Ring, please use Material Set Code Z52T instead of Z52N

All O-Rings with 12 mm cross section are delivered as special profile ring.

Polypac® - Veepac CH

Single-acting

Set of Chevron Rings

With Support and Pressure Energizing Ring

Without and with Anti-extrusion Ring

Material:
Fabric Reinforced Rubber - POM or PTFE

Veepac CH

Description

Veepac seals are sets of fabric reinforced chevron rings. They are composed by a support ring, "V" shaped sealing rings and a pressure energizing ring.

The support ring or base ring guides and sustains the other "V" shaped rings for best performance. Special versions provide incorporated anti-extrusion rings, either on the inner or outer side, for rod or piston applications (see type CH/NEI or CH/NEO). In standard versions, the support ring is manufactured in cotton fabric reinforced rubber, for a good anti-extrusion resistance.

The intermediate "V" shaped rings (vee-rings) are the real sealing elements of Veepac seals. Their particular shape confers the capacity of increasing sealing effectiveness under high pressure. In standard versions, they are made in cotton fabric reinforced NBR and pure NBR.

The energizer ring ensures uniform loading of pressure on the other rings. This element is manufactured in acetal resin, or cotton fabric reinforced nitrile for diameters over 300 mm (standard material).

DESIGN

The Veepac seals are available in different compositions. The standard version consists in a support ring, two fabric reinforced vee-rings, one rubber vee-ring and the energizing ring.

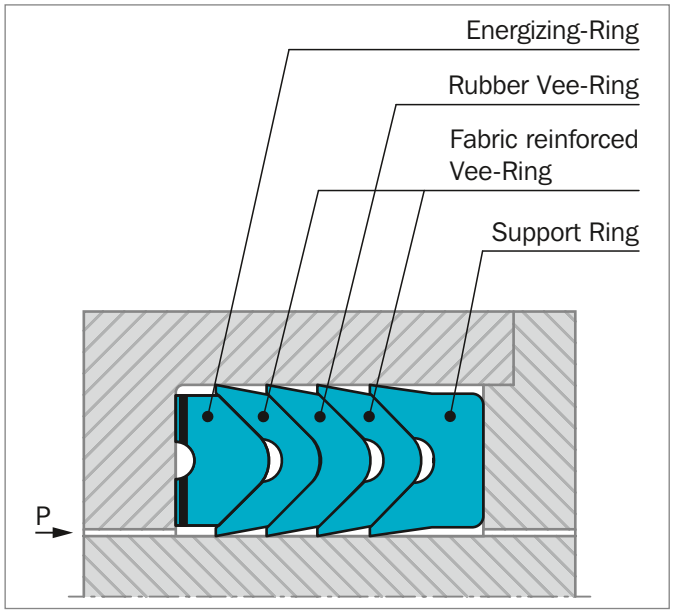

Figure 30: Veepac standard design

When the rubber vee-ring isn't available (indicated in Table 21 with the symbol ^) the Veepac are assembled with three fabric reinforced vee-ring as shown in figure below.

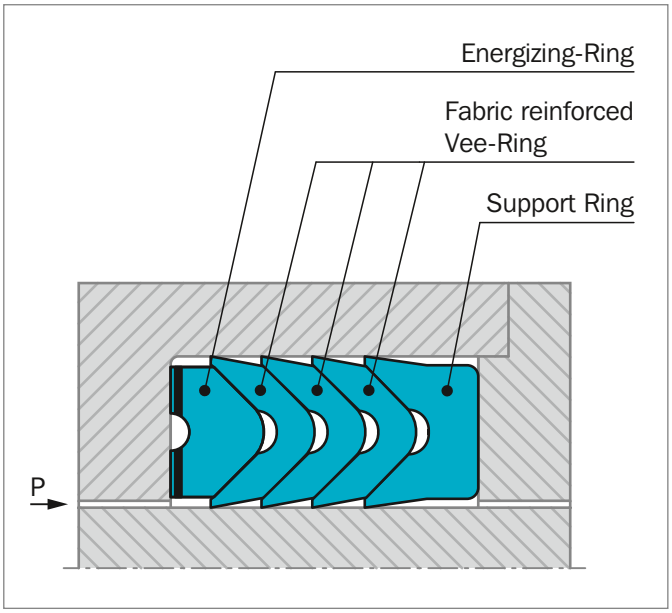

Figure 31: Veepac design with 3 fabric reinforced vee-ring

Where extrusion gaps are greater than those specified or for higher pressure conditions, special designs incorporating anti-extrusion rings can be made, to suit rods (suffix NEI) and at the Polypac ref.

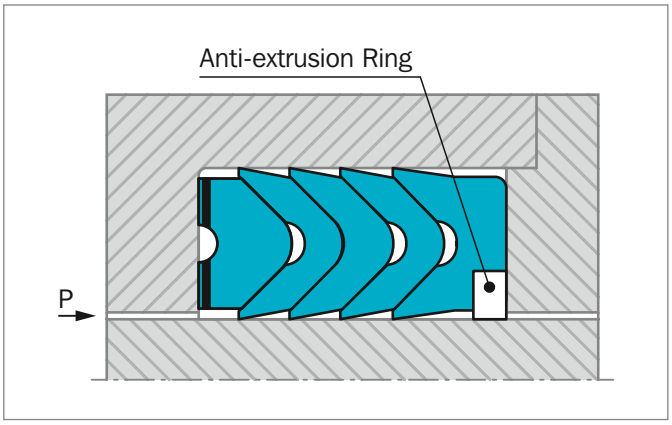

Figure 32: Veepac design with anti-extrusion ring

ADVANTAGES

- Exceptional wear resistance
- Pre-load adjustment capability
- Excellent behavior in harsh conditions
- Rod-seal replacement without complete cylinder dismantling possible
- Long service life

APPLICATION EXAMPLES

VEEPAC seals are recommended for single- or double-acting (back-to-back installation) hydraulic cylinders in the following applications:

- Ship hydraulics
- Excavators
- Steel mills
- Presses

OPERATING CONDITIONS

Pressure:	Up to 40 MPa
Velocity:	Up to 0.5 m/s
Temperature:	-30 °C to +200 °C
Media:	Hydraulic fluids Mineral Oil based hydraulic fluids,Water/oil and Water/Glycol emulsions
Groove Type:	Open

IMPORTANT NOTE

The above data are maximum values and cannot be used at the same time, e.g. the maximum operating speed depends on material type, pressure, temperature and gap value. Temperature range also depends on media.

GAP DIMENSIONS

To prevent extrusion the diameter not facing the pressure must be max. 0.3 mm smaller (than the piston seal) and 0.3 mm larger (than the rod seal). Using Veepac with Back-up Ring enables double values.

MATERIALS

Components of the VEEPAC seals are made in different combinations of materials, according to the specific application (see table below).

Table 20: Material Selection

Material Set Code	Temperature	Sealing Material	Energizer Ring Material	
N000C	-30 to +130 °C	Cotton reinforced NBR	POM-GL-BK	up to 300 mm I.D.
			Cotton reinforced NBR	over 300 mm I.D.
V000A	-20 to +150 °C	Aramidic Fiber reinforced FKM	POM-GL-BK	up to 300 mm I.D.
			Aramidic Fiber reinforced FKM	over 300 mm I.D.
V0P0A	-20 to +200 °C	Aramidic Fiber reinforced FKM	Filled PTFE	up to 300 mm I.D.
			Aramidic Fiber reinforced FKM	over 300 mm I.D.

Highlighted material is standard

Installation Recommendation

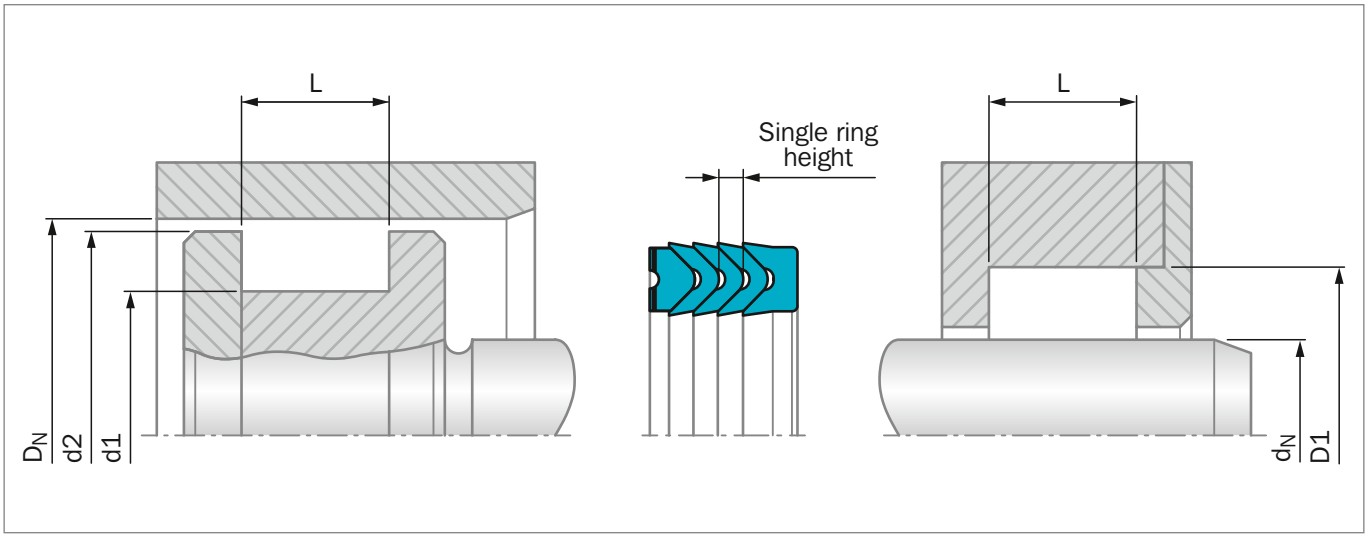

Figure 33: Installation Drawing

ORDERING EXAMPLE

For a **rod or piston** application of standard Veepac sealing element composed by: Support ring, 3 vee-rings and an energizer ring:

Rod/Groove Dia.:	d_N/d1 = 80.0 mm
Groove Dia./Bore:	D1/D_N = 100.0 mm
TSS Part No.:	RCH1 0 0800
Material Set-Code:	N000C
Polypac Part. No.:	CH 393314

TSS Article No. RCH1 0 0800 - N000C

- TSS Series No.
- Type (Standard)
- Rod Diameter x 10
- Quality Index
- Material Set-Code

Table 21: Installation Dimensions / TSS Part No.

Rod/Groove Dia.	Groove Dia./Bore	Groove Width	Diameter	Single Ring Height	Special Version		TSS Part No.	Polypac Ref. No.*
d_N h9/F8 **d1** h11	**D1** H11 **D_N** H9/f8	**L** -0.25	**d2** +/-0.1					
10.00	20.00	11.00	19.00	1.70			RCH000100	CH 078039/B
12.00	25.00	14.32	24.00	2.56			RCH000120	CH 098047/B
12.70	25.40	19.05	24.40	3.17			RCH000127	CH 100050
14.00	27.00	14.32	26.00	2.56	#		RCH000140	CH 106055/B
16.00	29.00	14.32	28.00	2.56			RCH000160	CH 114062/B
18.00	31.00	14.32	30.00	2.56			RCH000180	CH 122070/B
18.25	28.57	16.05	27.60	2.56			RCH000183	CH 112071
20.00	30.00	21.50	29.00	3.81			RCH000200	CH 118078
20.00	31.50	17.50	30.50	2.97			RCH100200	CH 124078
20.00	32.00	18.15	31.00	3.15	#	^	RCH200200	CH 125078
20.00	33.00	14.32	32.00	2.56			RCH300200	CH 129078/B
20.00	36.00	24.00	35.00	4.04			RCH400200	CH 141078

Rod/Groove Dia.	Groove Dia./Bore	Groove Width	Diameter	Single Ring Height	Special Version		TSS Part No.	Polypac Ref. No.*
d_N h9/F8 **d1** h11	**D1** H11 D_N H9/f8	**L** -0.25	**d2** +/-0.1					
22.00	32.00	18.13	31.00	2.75			RCH000220	CH 125086
22.00	38.00	26.00	37.00	4.21			RCH100220	CH 149086
22.00	40.00	22.50	39.00	3.70		^	RCH200220	CH 157086
25.00	35.00	17.30	34.00	2.82			RCH000250	CH 137098
25.00	40.00	19.84	39.00	3.50			RCH100250	CH 157098
25.00	42.00	25.40	41.00	4.29			RCH200250	CH 165098
25.00	45.00	25.40	44.00	4.50	#	^	RCH300250	CH 177098
25.40	38.10	19.45	37.10	3.48			RCH000254	CH 150100
26.00	45.00	29.37	44.00	5.16			RCH000260	CH 177102
28.00	40.00	17.00	39.00	2.80			RCH000280	CH 157110
28.00	44.00	17.62	43.00	3.17	#		RCH100280	CH 173110/B
28.00	44.00	24.00	43.00	4.15	#		RCH200280	CH 173110/1
28.57	41.27	19.84	40.30	3.50			RCH000286	CH 162112
30.00	40.00	21.80	39.00	3.76			RCH000300	CH 157118
30.00	42.00	20.00	41.00	3.50			RCH100300	CH 165118
30.00	50.00	29.37	49.00	5.08			RCH300300	CH 196118
31.75	44.45	16.25	43.40	3.19			RCH000318	CH 175125/1
31.75	44.45	19.05	43.40	3.50			RCH100318	CH 175125
31.75	47.62	29.05	46.60	4.34		^	RCH200318	CH 187125
32.00	42.00	17.30	41.00	2.82			RCH000320	CH 165125
32.00	48.00	17.63	47.00	3.17	#	^	RCH100320	CH 188125/B
34.92	47.62	20.64	46.60	3.43			RCH000349	CH 187137
34.92	50.80	24.21	49.80	4.14	#		RCH100349	CH 200137
35.00	45.00	21.78	44.00	3.81			RCH000350	CH 177137
35.00	50.00	22.50	49.00	3.57			RCH100350	CH 196137
36.00	52.00	17.60	51.00	3.17			RCH100360	CH 204141/B
38.00	55.00	28.00	54.00	5.05			RCH000380	CH 216149
38.10	50.80	19.45	49.00	3.51			RCH000381	CH 200150
38.10	53.97	25.27	53.00	4.60			RCH100381	CH 212150
38.10	53.97	27.78	53.00	4.60			RCH200381	CH 212150/1
39.00	55.00	25.40	54.00	4.65		^	RCH000390	CH 216153
40.00	50.00	17.30	49.00	2.82			RCH000400	CH 196157
40.00	55.00	22.62	54.00	3.84			RCH100400	CH 216157
40.00	55.00	26.19	54.00	3.84			RCH200400	CH 216157/1
40.00	56.00	17.63	55.00	3.17			RCH300400	CH 220157/B
40.00	60.00	30.00	59.00	5.16	#		RCH400400	CH 236157
40.00	65.00	35.72	64.00	6.15			RCH500400	CH 255157
44.45	57.15	21.83	56.20	3.38			RCH000445	CH 225175
44.45	60.32	27.80	59.30	4.07	#		RCH100445	CH 237175
45.00	55.00	17.50	54.00	2.80			RCH000450	CH 216177
45.00	60.00	22.22	59.00	3.89			RCH100450	CH 236177
45.00	65.00	28.00	64.00	5.34			RCH200450	CH 255177

Rod/Groove Dia.	Groove Dia./Bore	Groove Width	Diameter	Single Ring Height	Special Version		TSS Part No.	Polypac Ref. No.*
d_N h9/F8 **d1** h11	**D1** H11 D_N H9/f8	**L** -0.25	**d2** +/-0.1					
48.00	60.00	25.00	59.00	4.07		^	RCH000480	CH 236188
50.00	70.00	21.94	69.00	3.95			RCH200500	CH 275196/B
50.00	70.00	30.00	69.00	5.16			RCH300500	CH 275196
50.80	63.50	19.84	62.50	3.35			RCH000508	CH 250200
50.80	66.67	23.00	65.70	4.27			RCH100508	CH 262200
50.80	66.67	25.27	65.70	4.27			RCH200508	CH 262200/1
50.80	69.85	33.50	68.80	5.08	#		RCH300508	CH 275200
50.80	70.80	38.50	69.80	6.75	#	^	RCH400508	CH 278200
51.00	69.00	28.00	68.00	5.03			RCH000510	CH 271200
53.97	63.50	16.70	62.50	2.59	#		RCH000540	CH 250212
53.97	66.67	19.45	65.70	3.35	#	^	RCH100540	CH 262212
53.97	69.85	28.00	68.80	4.07			RCH200540	CH 275212
55.00	67.00	25.00	66.00	4.07			RCH000550	CH 263216
55.00	70.00	26.50	69.00	4.02			RCH100550	CH 275216
55.00	75.00	30.00	74.00	6.48			RCH200550	CH 295216
55.00	75.00	38.50	74.00	6.48			RCH400550	CH 295216/1
55.00	80.00	33.73	79.00	5.16	#		RCH500550	CH 314216
56.00	76.00	21.95	75.00	3.94		^	RCH000560	CH 299220/B
56.00	76.00	33.40	75.00	5.38			RCH100560	CH 299220
57.15	69.85	19.05	68.80	3.25			RCH000572	CH 275225
57.15	73.02	27.78	72.00	4.27	#		RCH100572	CH 287225
57.15	76.20	32.54	75.20	5.16			RCH200572	CH 300225
60.00	76.00	29.00	75.00	4.34			RCH100600	CH 299236
60.00	77.00	27.00	76.00	4.59			RCH200600	CH 303236
60.00	80.00	32.15	79.00	5.66			RCH300600	CH 314236
63.00	83.00	21.94	82.00	3.95			RCH000630	CH 326248/B
63.00	85.00	32.00	84.00	5.67			RCH100630	CH 334248
63.50	80.00	28.00	79.00	5.03		^	RCH200635	CH 314250
63.50	82.50	26.59	81.50	4.76			RCH300635	CH 325250
63.50	82.50	31.62	81.50	4.76			RCH400635	CH 325250/1
64.00	80.00	25.80	79.00	4.65			RCH000640	CH 314251
65.00	77.00	21.00	76.00	4.04			RCH000650	CH 303255
65.00	80.00	26.00	79.00	4.00	#		RCH100650	CH 314255
65.00	85.00	29.00	84.00	5.21			RCH200650	CH 334255
65.00	90.00	30.00	89.00	5.00		^	RCH300650	CH 354255
66.30	85.00	24.13	84.00	4.60	#		RCH000663	CH 334261
68.00	88.00	30.00	87.00	5.21	#		RCH000680	CH 346267
69.85	88.90	25.40	87.90	4.83			RCH100699	CH 350275
69.85	88.90	35.50	87.90	4.83			RCH200699	CH 350275/1
70.00	85.00	28.00	84.00	4.32			RCH100700	CH 334275
70.00	90.00	21.95	89.00	3.95		^	RCH200700	CH 354275/B
70.00	90.00	30.00	89.00	5.08			RCH300700	CH 354275

Rod/Groove Dia.	Groove Dia./Bore	Groove Width	Diameter	Single Ring Height	Special Version		TSS Part No.	Polypac Ref. No.*
d_N h9/F8 **d1** h11	**D1** H11 D_N H9/f8	**L** -0.25	**d2** +/-0.1					
72.00	90.00	30.16	89.00	4.86		^	RCH000720	CH 354283
73.02	88.90	26.58	87.90	4.34			RCH000730	CH 350287
75.00	90.00	22.50	89.00	4.04			RCH000750	CH 354295
75.00	95.00	30.00	94.00	5.21			RCH100750	CH 374295
75.00	100.00	30.00	99.00	5.80		^	RCH300750	CH 393295
75.00	100.00	37.50	99.00	6.32	#	^	RCH400750	CH 393295/1
76.20	88.90	16.27	87.50	2.78			RCH000762	CH 350300
76.20	95.25	25.52	94.20	5.16	#		RCH100762	CH 375300/1
76.20	95.25	28.97	94.20	5.16			RCH200762	CH 375300
80.00	95.00	17.50	94.00	3.05			RCH000800	CH 374314
80.00	100.00	30.00	99.00	4.83			RCH100800	CH 393314
80.00	105.00	27.41	104.00	4.98		^	RCH200800	CH 413314/B
82.55	101.60	28.97	100.60	4.88			RCH100826	CH 400325
85.00	100.00	17.30	99.00	2.50			RCH000850	CH 393334
85.00	105.00	30.00	104.00	5.35			RCH100850	CH 413334
85.72	104.77	29.37	103.80	4.88			RCH100857	CH 412337
88.90	101.60	17.00	100.60	3.40			RCH000889	CH 400350
88.90	107.95	33.33	106.90	4.90		^	RCH200889	CH 425350/1
89.00	105.00	25.80	104.00	4.65			RCH000890	CH 413350
90.00	105.00	31.75	104.00	5.71			RCH000900	CH 413354
90.00	110.00	25.00	109.00	4.88			RCH100900	CH 433354/1
90.00	110.00	26.88	109.00	4.88			RCH200900	CH 433354
90.00	115.00	27.41	114.00	4.98		^	RCH300900	CH 452354/B
92.07	111.13	29.37	110.10	5.16	#	^	RCH000921	CH 437362
95.00	110.00	24.00	109.00	4.11			RCH200950	CH 433374
95.25	111.13	24.30	110.10	4.09	#	^	RCH300953	CH 452375
98.42	123.82	36.96	122.80	6.55			RCH000984	CH 437387
100.00	114.30	20.64	113.30	3.57			RCH001000	CH 450393
100.00	115.00	25.30	114.00	3.96			RCH101000	CH 452393
100.00	120.00	28.00	119.00	5.16			RCH201000	CH 472393
100.00	120.00	31.00	119.00	5.16	#		RCH301000	CH 472393/1
100.00	125.00	27.40	124.00	4.98		^	RCH401000	CH 492393/B
100.00	125.00	36.90	124.00	6.60		^	RCH501000	CH 492393
101.60	127.00	32.15	126.00	5.82	#		RCH001016	CH 500400
104.00	130.00	37.00	129.00	6.73			RCH001040	CH 511409
105.00	120.00	25.00	119.00	4.00			RCH001050	CH 472413
105.00	125.00	29.76	124.00	5.00		^	RCH201050	CH 492413
105.00	135.00	34.50	134.00	5.80		^	RCH301050	CH 531413
106.00	135.00	33.00	134.00	5.65	#	^	RCH001060	CH 531417
110.00	132.00	36.50	131.00	6.96			RCH201100	CH 519433
111.12	136.52	38.89	135.50	6.53	#	^	RCH001111	CH 537437
114.00	130.00	25.80	129.00	4.80			RCH001140	CH 511448

Rod/Groove Dia.	Groove Dia./Bore	Groove Width	Diameter	Single Ring Height	Special Version		TSS Part No.	Polypac Ref. No.*
d_N h9/F8 **d1** h11	**D1** H11 D_N H9/f8	**L** -0.25	**d2** +/-0.1					
114.30	127.00	18.41	126.00	3.43			RCH001143	CH 500450
114.30	133.35	28.18	132.30	5.26		^	RCH101143	CH 525450
114.30	139.70	31.75	138.70	5.56	#	^	RCH201143	CH 550450
115.00	140.00	37.12	139.00	6.00		^	RCH101150	CH 551452
117.47	142.87	36.10	141.90	6.15	#	^	RCH001175	CH 562462
120.00	140.00	30.00	139.00	5.36			RCH001200	CH 551472
125.00	145.00	29.62	144.00	5.18			RCH001250	CH 570492
125.00	150.00	27.40	149.00	4.98			RCH101250	CH 590492/B
125.00	155.00	34.50	154.00	5.80	#	^	RCH201250	CH 610492
127.00	152.40	38.63	151.40	6.48			RCH001270	CH 600500
130.00	150.00	29.76	149.00	4.96			RCH001300	CH 590511
130.00	155.00	40.00	154.00	7.25	#	^	RCH101300	CH 610511
130.00	160.00	41.50	159.00	5.50	#		RCH201300	CH 629511
130.00	160.00	43.50	159.00	5.50	#		RCH301300	CH 629511/1
135.00	155.00	30.55	154.00	5.11			RCH001350	CH 610531
139.70	165.10	37.30	164.10	5.56	#	^	RCH001397	CH 6950550
140.00	160.00	28.50	159.00	5.16			RCH001400	CH 629551
140.00	165.00	41.95	164.00	6.56	#		RCH101400	CH 649551
140.00	170.00	32.97	169.00	5.99		^	RCH201400	CH 669551/B
145.00	170.00	38.10	169.00	6.45		^	RCH001450	CH 669570
146.05	171.45	38.89	170.40	6.53		^	RCH001461	CH 675575
150.00	170.00	30.56	169.00	5.16			RCH001500	CH 669590
150.00	180.00	40.00	179.00	6.28		^	RCH101500	CH 708590
152.40	177.80	33.34	176.80	5.77		^	RCH001524	CH 700600
154.00	175.00	29.44	174.00	5.31		^	RCH001540	CH 688606
157.00	182.00	30.25	181.00	5.72		^	RCH001570	CH 716618
160.00	180.00	30.00	179.00	5.00	#		RCH001600	CH 708629
160.00	190.00	32.97	189.00	5.99		^	RCH101600	CH 748629/B
161.92	180.97	28.57	180.00	5.00	#	^	RCH001619	CH 712637
170.00	195.00	37.50	194.00	6.55		^	RCH001700	CH 767669
170.00	200.00	50.00	199.00	8.00	#	^	RCH101700	CH 787669
171.45	187.32	24.20	186.30	4.09	#	^	RCH001715	CH 737675
175.00	200.00	42.00	199.00	7.54			RCH001750	CH 787688
177.80	196.85	31.00	195.80	5.16		^	RCH001778	CH 775700
177.80	203.20	32.54	202.20	5.95		^	RCH101778	CH 800700
180.00	210.00	32.97	209.00	5.99			RCH001800	CH 826708/B
180.97	203.20	31.75	202.20	5.95			RCH000810	CH 800712
187.32	200.00	21.74	199.00	3.86		^	RCH001873	CH 787737
190.50	222.25	50.00	221.20	7.57		^	RCH001905	CH 875750
200.00	220.00	30.00	219.00	5.00			RCH002000	CH 866787
200.00	230.00	32.97	229.00	5.99		^	RCH102000	CH 905787/B
205.00	225.00	19.48	224.00	3.17		^	RCH002050	CH 885807

Rod/Groove Dia.	Groove Dia./Bore	Groove Width	Diameter	Single Ring Height	Special Version		TSS Part No.	Polypac Ref. No.*
d_N h9/F8 **d1** h11	**D1** H11 D_N H9/f8	**L** -0.25	**d2** +/-0.1					
210.00	240.00	34.50	239.00	5.80			RCH002000	CH 944826
210.00	240.00	42.10	239.00	7.55		^	RCH102000	CH 944826/1
220.00	250.00	52.00	249.00	8.25		^	RCH002050	CH 984866
224.00	254.00	32.97	253.00	5.99		^	RCH002240	CH 1000881/B
228.60	254.00	38.10	253.00	6.30		^	RCH002286	CH 1000900
228.60	260.35	48.42	259.30	8.46			RCH102286	CH 1025900
240.00	270.00	45.00	269.00	8.03		^	RCH002240	CH 1062944
250.00	270.00	32.00	269.00	5.00			RCH002286	CH 1062984
254.00	279.40	38.10	268.40	5.95		^	RCH102286	CH 11001000
268.29	298.45	45.24	297.40	7.97		^	RCH002683	CH 11751056
269.88	307.98	53.97	307.00	8.44		^	RCH002699	CH 12121062
280.00	315.00	38.45	314.00	6.98		^	RCH1022800	CH 12401102/B
288.93	307.98	28.57	55.00	5.21		^	RCH002889	CH 12121137
290.00	320.00	50.80	60.00	7.29		^	RCH002900	CH 12591141
300.00	320.00	32.00	60.00	5.00			RCH003000	CH 12591181
304.80	330.20	38.10	329.20	6.55		^	RCH003048	CH 13001200
310.00	330.00	30.00	329.00	5.50		^	RCH003100	CH 12991220
315.00	350.00	38.45	349.00	6.98		^	RCH003150	CH 13771240/B
320.00	365.00	55.00	364.00	8.50		^	RCH003200	CH 14371259
340.00	380.00	60.00	379.00	10.41		^	RCH003400	CH 14961338
350.00	390.00	60.00	389.00	10.54	#	^	RCH003500	CH 15351377
355.60	381.00	38.10	380.00	5.95			RCH003556	CH 15001400
368.30	406.40	57.15	405.40	10.00		^	RCH003683	CH 16001450
369.00	400.00	45.00	399.00	7.68		^	RCH003690	CH 15741452
400.00	440.00	54.00	439.00	8.38		^	RCH004000	CH 17321574
416.00	450.00	50.00	449.00	8.67		^	RCH004160	CH 17711637
420.00	460.00	51.60	459.00	8.40			RCH004200	CH 18111653
505.00	545.00	60.00	544.00	10.40		^	RCH005050	CH 21451988
700.00	750.00	73.00	749.00	6.35	#		RCH007000	CH 29532756

* As the Polypac Ref. No. does not refer to the material, please always state the full number if available for identification.
"#" and "^" see Table 22.

Table 22: Explanation to "Special Version"

Not available with rubber V-ring		^
Available upon request	#	

Installation Recommendation, Type Polypac CH/NEI (with Back-up Ring)

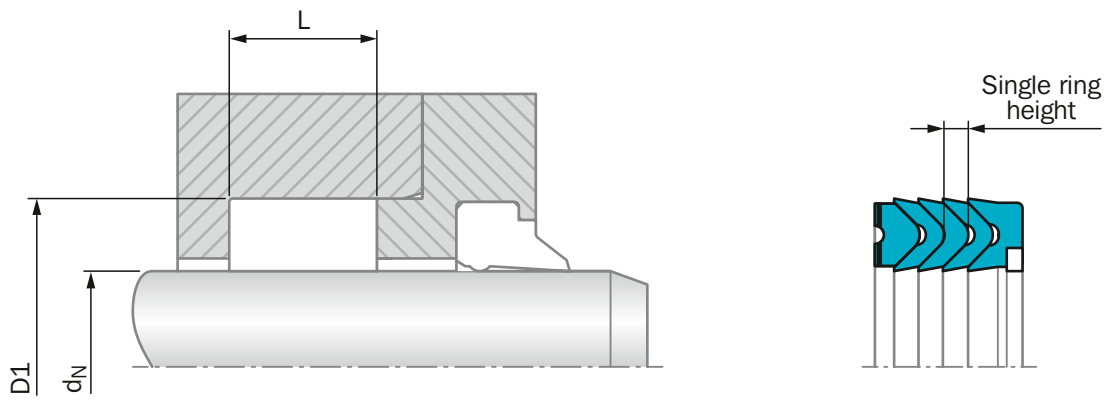

Figure 34: Installation Drawing

ORDERING EXAMPLE

For a **rod** application of Veepac sealing element composed by: Support ring **with anti-extrusion ring**, 3 vee-rings and an energizer ring:

Rod Diamater:	d_N = 80.0 mm
Groove Diameter:	D1 = 100.0 mm
TSS Part No.:	RCH1 E 0800
Material Set-Code:	N000C
Polypac Part. No.:	CH 393314/NEI

TSS Article No. RCH1 E 0800 - N000C

- TSS Series No. — RCH1
- Type (Standard) — E
- Rod Diameter x 10 — 0800
- Quality Index — -
- Material Set-Code — N000C

Table 23: Installation Dimensions / TSS Part No.

Rod Diameter	Groove Diameter	Groove Width	Single Ring Height	Special Version		TSS Part No.	Polypac Ref. No.*
d_N h9/F8	**D1** H11	**L** -0.25					
d_1 h11	D_N H9/f8						
10.00	20.00	11.00	1.70			RCH0E0100	CH 078039/B/NEI
28.00	44.00	17.62	3.17	#		RCH1E0280	CH 173110/B/NEI
28.00	44.00	24.00	4.15	#		RCH2E0280	CH 173110/1/NEI
30.00	45.00	22.20	3.80	#		RCH2E0300	CH 177118/NEI
30.00	50.00	29.37	5.08			RCH3E0300	CH 196118/NEI
32.00	48.00	17.63	3.17	#	^	RCH1E0320	CH 188125/B/NEI
36.00	51.00	24.00	4.14	#		RCH0E0360	CH 200141/NEI
40.00	55.00	22.62	3.84			RCH1E0400	CH 216157/NEI
40.00	55.00	26.19	3.84			RCH2E0400	CH 216157/1/NEI
45.00	60.00	22.22	3.89			RCH1E0450	CH 236177/NEI
48.00	62.00	22.22	3.73			RCH1E0480	CH 244188/NEI
50.00	65.00	24.60	4.34			RCH0E0500	CH 255196/NEI

Rod Diameter	Groove Diameter	Groove Width	Single Ring Height	Special Version		TSS Part No.	Polypac Ref. No.*
d_N h9/F8	**D1** H11	**L** -0.25					
d_1 h11	D_N H9/f8						
50.00	65.00	26.00	4.34			RCH1E0500	CH 255196/1/NEI
50.00	70.00	30.00	5.16			RCH3E0500	CH 275196/NEI
53.97	73.02	31.75	5.16			RCH3E0540	CH 287212/NEI
55.00	70.00	26.50	4.02			RCH1E0550	CH 275216/NEI
55.00	75.00	31.00	6.48	#		RCH3E0550	CH 295216/2/NEI
55.00	75.00	38.50	6.48			RCH4E0550	CH 295216/1/NEI
56.00	76.00	33.40	5.38			RCH1E0560	CH 299220/NEI
60.00	75.00	19.00	3.00			RCH0E0600	CH 295236/NEI
60.00	76.00	29.00	4.34			RCH1E0600	CH 299236/NEI
60.00	80.00	32.15	5.66			RCH3E0600	CH 314236/NEI
63.00	85.00	32.00	5.67			RCH1E0630	CH 334248/NEI
63.50	82.50	26.59	4.76			RCH3E0635	CH 325250/NEI
63.50	82.50	31.62	4.76			RCH4E0635	CH 325250/1/NEI
65.00	80.00	26.00	4.00	#		RCH1E0650	CH 314255/NEI
65.00	85.00	29.00	5.21			RCH2E0650	CH 334255/NEI
69.85	85.72	23.81	4.09			RCH0E0699	CH 337275/NEI
70.00	83.00	25.00	4.25	#		RCH0E0700	CH 326275/NEI
75.00	90.00	22.50	4.04			RCH0E0750	CH 354295/NEI
75.00	95.00	31.50	5.21			RCH2E0750	CH 374295/1/NEI
80.00	100.00	30.00	4.83			RCH1E0800	CH 393314/NEI
85.00	105.00	30.00	5.35			RCH1E0850	CH 413334/NEI
85.72	104.77	29.37	4.88			RCH1E0857	CH 412337/NEI
90.00	110.00	26.88	4.88			RCH2E0900	CH 433354/NEI
95.00	110.00	24.00	4.11			RCH0E0950	CH 433374/NEI
95.00	120.00	41.00	7.50	#	^	RCH1E0950	CH 472374/NEI
100.00	120.00	28.00	5.16			RCH2E1000	CH 472393/NEI
106.00	135.00	33.00	5.65	#	^	RCH0E1060	CH 531417/NEI
110.00	130.00	27.00	5.00	#		RCH0E1100	CH 511433/1/NEI
110.00	130.00	30.00	5.00	#		RCH1E1100	CH 511433/NEI
110.00	132.00	36.50	6.96			RCH2E1100	CH 519433/NEI
110.00	135.00	41.50	7.00	#	^	RCH3E1100	CH 531433/NEI
115.00	130.00	25.49	4.35	#		RCH0E1150	CH 511452/NEI
120.00	140.00	30.00	5.36			RCH0E1200	CH 551472/NEI
120.00	145.00	39.50	7.25	#	^	RCH1E1200	CH 570472/NEI

* As the Polypac Ref. No. does not refer to the material, please always state the full number if available for identification.
"#" and "^" see Table 24.

Table 24: Explanation to "Special Version"

Not available with rubber V-ring		^
Available upon request	#	

Polypac® - Veepac CH/G5

Single-acting

Set of Chevron Rings

With Support and Pressure Energizing Ring

Material:
Fabric Reinforced Rubber,
POM or PTFE

Veepac CH/G5 Set

Description

Veepac is a set of fabric reinforced Chevron rings comprising of a support ring (1), sealing rings (2) and a pressure energizing ring (3). In the packing set, the energizing axial force is transferred between the individual packing rings so that each ring is pressed into positive contact with the rod surface. In addition to the standard materials, special material grades are available for a large variety of working conditions. The Figure 35 shows the Veepac design.

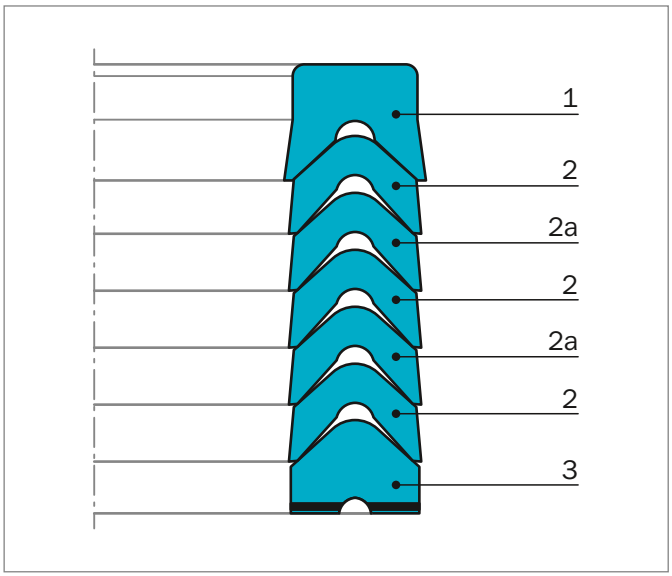

Figure 35: Veepac design

1) "U" or base rings in standard versions manufactured in reinforced fabric comprising of layers of cotton impregnated with nitrile rubber, compounded to resist extrusion. This component supports the vee-rings for effective performance.

2) Vee-rings are made of reinforced cotton fabric and nitrile elastomer in standard versions, to give good resilience, sealing efficiency and extrusion resistance.
Due to their specific design, Vee Rings are sensitive to fluid pressure variations, enabling them to deflect throughout their radial section, increase the seal loading and effectiveness in proportion to the pressures applied.

2a) Vee-rings are made of pure elastomer for high sealing efficiency.

3) Energizer or spreader rings are manufactured in acetal resin or PTFE. The function of this component is to ensure a uniform pressure distribution.

ADVANTAGES

- Very robust seal
- Non sensitive
- Adjustable
- Easy replacement in the field with split rings
- Extensive range of sizes (see symmetrical seals)
- Requires non super mating surfaces

APPLICATION EXAMPLES

- Mining equipment (with approvals)
- Excavators-steel mills
- Water hydraulic
- Presses
- Ship hydraulics
- Stabilizer cylinders on cranes
- Continous casting equipment

OPERATING CONDITIONS

Pressure:	Up to 40 MPa
Velocity:	Up to 0.5 m/s
Temperature:	-30 °C to +200 °C depending on material
Media:	Mineral oil, water glycol, water emulsions

IMPORTANT NOTE

The above data are maximum values and cannot be used at the same time, e.g. the maximum operating speed depends on material type, pressure, temperature and gap value. Temperature range also depends on media.

MATERIALS

The following material combination can be supplied:

Table 25: Common material choices

	Standard	Non standard	Non standard
Materials	NOONC	VOPVA	VOOVA
Vee-rings and Back-up Ring	Cotton Fabric NBR	Aramid Fabric FKM	Aramid Fabric FKM
Spreader*	POM	PTFE	POM
Elastomeric Vee-rings	NBR	FKM	FKM
Temperature Range °C	-30 +130	-20 +200	-20 +150

* The material for the spreader is dependent from the diameter.

DESIGN INSTRUCTIONS

Lead in chamfers

In order to avoid damage to the Veepac during installation, lead-in chamfers of min. 5 x 20° must be provided on the rods.

Table 26: Lead in chamfers

Rod Diameter	Lead in Chamfer
0 - 100	5 x 20°
101 - 200	7 x 20°
201 - 400	10 x 20°

Surface roughness

Table 27: Surface parameters

Parameter	Mating Surface µm	Groove Surface µm
R_{max}	1.00 - 4.00	< 16.0
$R_{z\ DIN}$	0.63 - 2.50	< 10.0
R_a	0.10 - 0.40	< 1.6

The material contact area R_{mr} should be approximately 50 to 70%, determined at a cut depth c = 0.25 x R_z, relative to a reference line of C_{ref}. 5%.

CLEARANCE

The gap behind the seal should not be larger than 0.30 mm in diameter.

Installation Recommendation

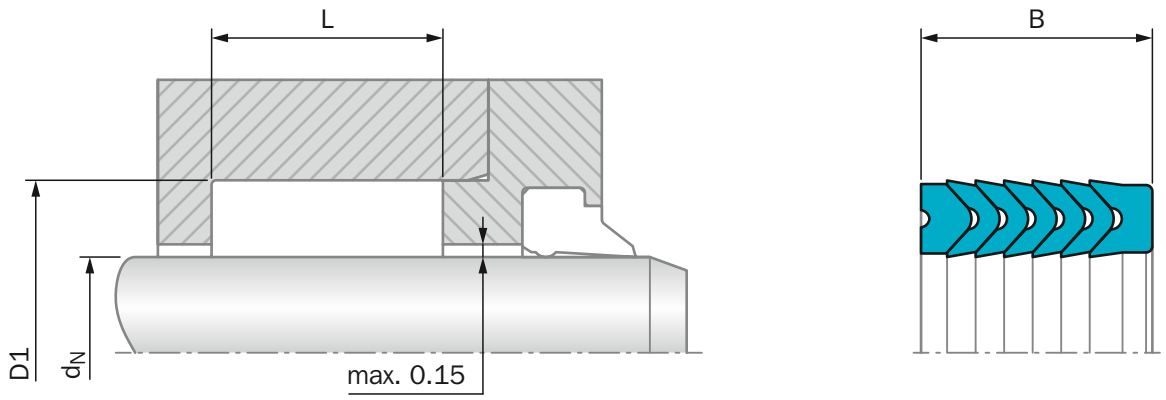

Figure 36: Installation Drawing

ORDERING EXAMPLE

Veepac Type RCH_G

Rod Diameter:	d_N = 70.0 mm
Groove Diameter:	D1 = 85.0 mm
Groove Width:	L = 22.5 mm
TSS Part No.:	RCH0G0700 -
Material:	N0ONC (standard)

TSS Article No. RCH 0 G 0700 - N0ONC

TSS Series No.
Design Code
Execution Mark
Rod Diameter x 10
Quality Index (Standard)
Material Code (Standard)
Polypac Ref. No.: CH 334275/G5

Table 28: Installation Dimensions / TSS Part No.

Rod Dia.	Groove Dia.	Groove Width	Seal Width	TSS Part No.	Description
d_N f8/h9	D1 H11	L +0.2	B		
25.0	37.0	22.5	22.5	RCH0G0250	CH 145098/G5
25.0	40.0	22.5	22.5	RCH1G0250	CH 157098/G5
28.0	40.0	22.5	22.5	RCH0G0280	CH 157110/G5
30.0	45.0	22.5	22.5	RCH0G0300	CH 177118/G5
36.0	48.0	22.5	22.5	RCH0G0360	CH 188141/G5
40.0	55.0	22.5	22.5	RCH0G0400	CH 216157/G5
45.0	60.0	22.5	22.5	RCH0G0450	CH 236177/G5
45.0	65.0	27.5	27.5	RCH1G0450	CH 255177/G5
50.0	65.0	22.5	22.5	RCH0G0500	CH 255196/G5
56.0	71.0	22.5	22.5	RCH0G0560	CH 279220/G5
60.0	80.0	37.0	37.0	RCH0G0600	CH 314236/G5
65.0	85.0	40.0	40.0	RCH0G0650	CH 334255/G5
70.0	85.0	22.5	22.5	RCH0G0700	CH 334275/G5
70.0	90.0	40.0	40.0	RCH1G0700	CH 354275/G5
75.0	90.0	22.5	22.5	RCH0G0750	CH 354295/G5
80.0	95.0	22.5	22.5	RCH0G0800	CH 374314/G5
80.0	100.0	40.0	40.0	RCH1G0800	CH 393314/G5
85.0	100.0	22.5	22.5	RCH0G0850	CH 393334/G5
90.0	105.0	22.5	22.5	RCH0G0900	CH 413354/G5
90.0	110.0	40.0	40.0	RCH1G0900	CH 433354/G5
100.0	115.0	30.0	30.0	RCH0G1000	CH 452393/G5
100.0	120.0	40.0	40.0	RCH1G1000	CH 472393/G5
110.0	125.0	30.0	30.0	RCH0G1100	CH 492433/G5
110.0	130.0	40.0	40.0	RCH1G1100	CH 511433/G5
120.0	145.0	50.0	50.0	RCH0G1200	CH 570472/G5
125.0	140.0	34.0	34.0	RCH0G1250	CH 551492/G5
125.0	150.0	46.0	46.0	RCH1G1250	CH 590492/G5
140.0	155.0	34.0	34.0	RCH0G1400	CH 610551/G5
140.0	165.0	46.0	46.0	RCH1G1400	CH 649551/G5
160.0	180.0	40.0	40.0	RCH0G1600	CH 708629/G5
160.0	190.0	60.0	60.0	RCH1G1600	CH 748629/G5

CH Production numbers of the available dimensions in standard materials. For specific materials, please indicate existing Polypac designations.
Further sizes in chapter: Symmetrical Seals.

Polypac® - Selemaster SM

Single-acting

Compact Rod Seal

With Anti-extrusion Ring

Material:
Rubber + Fabric Reinforced
Rubber + POM

Selemaster SM

Description

The rod seal range has been designed to meet the needs of hydraulic equipment operating at high pressures and subjected to severe loading and vibration conditions.

The main sealing element is manufactured in a highly compression-set resistant nitrile. The most important quality of this element is the design of the multiple sealing lips for maximum sealing efficiency and end face configuration, which ensures that the Selemaster can tolerate vibrations and severe misalignment.

The support ring is made in cotton fabric reinforced nitrile elastomer; the “U“ shape is energized when pressure is applied.

The last element is the anti-extrusion ring, manufactured in POM.

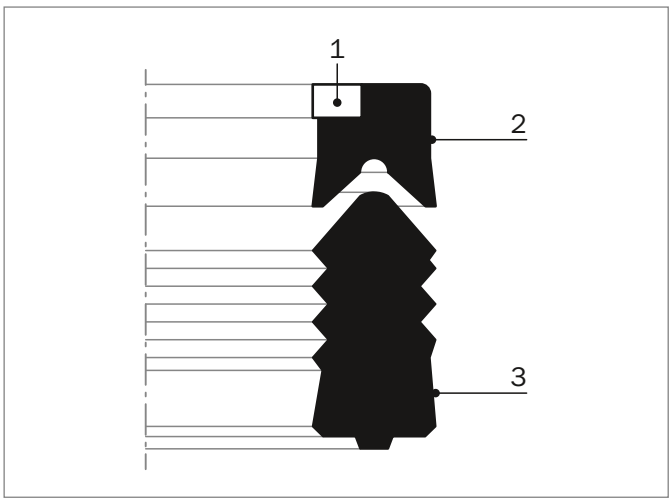

Figure 37: Selemaster design

1) POM anti-extrusion ring
2) Support ring in cotton fabric reinforced nitrile, NBR 80 Shore A
3) Sealing element in nitrile, NBR 80 Shore A

NOTE

- For low-temperature applications (-50 °C to +110 °C), a special material - code N7C0 - Polypac Ref.: /1AX - 2187 is available

ADVANTAGES

- High sealing efficiency
- Effective sealing during vibration and shock loading
- Extrusion resistance at high pressure

APPLICATION EXAMPLES

- Earth-moving machines
- Excavators
- Lift platforms

OPERATING CONDITIONS

Pressure:	Up to 70 MPa
Velocity:	Up to 0.5 m/s
Temperature:	-40 °C to +130 °C
Media:	Hydraulic fluids Mineral oil-based hydraulic fluids, water and water/glycol emulsions
Groove Type:	Open

IMPORTANT NOTE

The above data are maximum values and cannot be used at the same time, e.g. the maximum operating speed depends on material type, pressure, temperature and gap value. Temperature range also depends on media.

Installation Recommendation

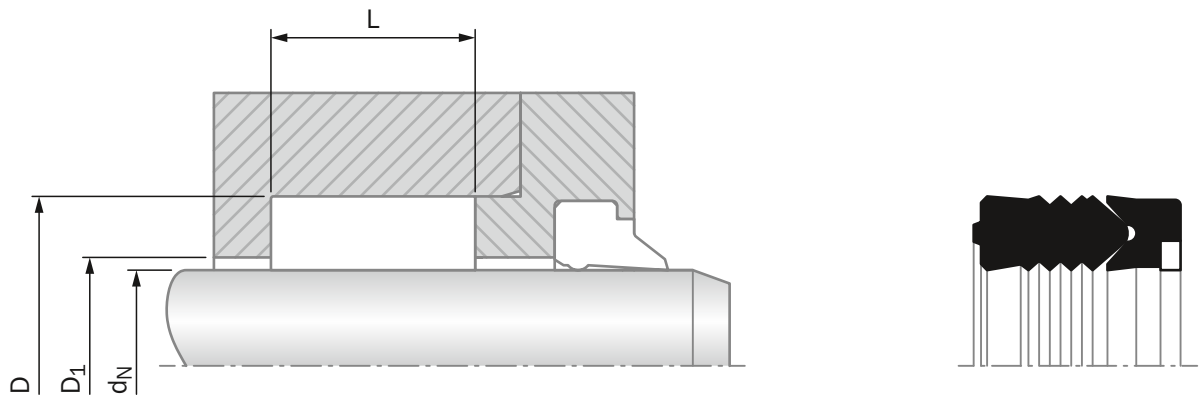

Figure 38: Installation Drawing

ORDERING EXAMPLE

Selemaster RCK

Rod Diameter:	d_N = 50.0 mm
Groove Diameter:	D = 65.0 mm
Groove Width:	L = 24.5 mm
TSS Part No.:	RCK100500
Material Code:	N8C0 standard
Polypac Ref.:	SM 255196/1AX

TSS Article No. RCK 0 00500 - N8C0

- TSS Series No. — RCK
- Type (Standard) — 0
- Rod Diameter x 10 — 00500
- Quality Index (standard) — -
- Material Set-code — N8C0

Table 29: Installation Dimensions / TSS Article No.

Rod Diameter	Groove Diameter	Groove Width	Diameter	TSS Article No. Standard	Description
d_N h9	D H10	L +0.4	D_1 +-0.1		
15.00	27.00	20.00	15.40	RCK000150-N8C0	SM 106059/1AX
20.00	33.00	20.00	20.40	RCK000200-N8C0	SM 129078/1AX
22.00	35.00	20.00	22.40	RCK000220-N8C0	SM 137086/1AX
25.00	38.00	20.00	25.40	RCK000250-N8C0	SM 149098/1AX
28.00	41.00	20.00	28.40	RCK000280-N8C0	SM 161110/1AX
30.00	43.00	20.00	30.40	RCK000300-N8C0	SM 169118/1AX
32.00	47.00	22.50	32.40	RCK000320-N8C0	SM 185125/1AX
35.00	45.00	25.60	35.40	RCK000350-N8C0	SM 177137/1AX
35.00	47.00	22.50	35.40	RCK100350-N8C0	SM 185137/1AX
35.00	50.00	22.50	35.40	RCK200350-N8C0	SM 196137/1AX
36.00	51.00	22.50	36.40	RCK000360-N8C0	SM 200141/1AX
38.10	50.80	23.90	38.50	RCK000381-N8C0	SM 200150/1AX

Rod Diameter	Groove Diameter	Groove Width	Diameter		TSS Article No. Standard	Description
d_N h9	D H10	L +0.4	D_1 +-0.1			
40.00	52.00	22.50	40.40		RCK200400-N8C0	SM 204157/1AX
40.00	55.00	22.60	40.40		RCK100400-N8C0	SM 216157/1AX
40.00	60.00	30.00	40.40		RCK000400-N8C0	SM 236157/1AX
45.00	60.00	22.50	45.40		RCK000450-N8C0	SM 236177/1AX
45.00	65.00	28.00	45.40		RCK100450-N8C0	SM 255177/1AX
50.00	63.00	20.00	50.40		RCK000500-N8C0	SM 248196/1AX
50.00	65.00	24.50	50.40		RCK100500-N8C0	SM 255196/1AX
50.00	65.00	26.50	50.40	^	RCK200500-N8C0	SM 255196/2AX
50.00	65.00	22.50	50.40		RCK300500-N8C0	SM 255196/1BX
50.00	70.00	30.00	50.40		RCK400500-N8C0	SM 275196/1BX
50.00	70.00	31.90	50.40		RCK500500-N8C0	SM 275196/1AX
50.80	66.67	24.90	51.20		RCK000508-N8C0	SM 262200/1AX
55.00	70.00	25.00	55.40		RCK000550-N8C0	SM 275216/1AX
55.00	70.00	22.50	55.40		RCK100550-N8C0	SM 275216/2AX
55.00	75.00	32.00	55.40		RCK200550-N8C0	SM 295216/1AX
55.00	75.00	30.00	55.40		RCK300550-N8C0	SM 295216/2AX
56.00	71.00	25.00	56.40	^	RCK000560-N8C0	SM 279220/1AX
56.00	76.00	28.00	56.40		RCK100560-N8C0	SM 299220/1AX
60.00	75.00	25.00	60.40		RCK000600-N8C0	SM 295236/1AX
60.00	75.00	22.50	60.40		RCK100600-N8C0	SM 295236/2AX
60.00	77.00	27.00	60.40		RCK200600-N8C0	SM 303236/1AX
60.00	80.00	34.90	40.40		RCK300600-N8C0	SM 314236/1AX
63.00	83.00	29.00	63.40	^	RCK000630-N8C0	SM 326248/1AX
63.00	83.00	27.00	63.40		RCK100630-N8C0	SM 326248/1BX
63.50	82.55	26.60	63.90		RCK000635-N8C0	SM 325250/1AX
65.00	85.00	29.00	65.40		RCK000650-N8C0	SM 334255/1AX
70.00	83.00	25.00	70.40		RCK000700-N8C0	SM 326275/1AX
70.00	85.00	25.00	70.40		RCK200700-N8C0	SM 334275/1BX
70.00	85.00	22.50	70.40		RCK100700-N8C0	SM 334275/1AX
70.00	90.00	30.00	70.40		RCK300700-N8C0	SM 354275/1AX
70.00	90.00	31.90	70.40		RCK400700-N8C0	SM 354275/2AX
75.00	95.00	30.00	75.40		RCK100750-N8C0	SM 374295/2CX
75.00	95.00	28.00	75.40		RCK000750-N8C0	SM 374295/2AX
76.20	95.25	24.60	76.60		RCK000762-N8C0	SM 375300/1AX
76.50	96.50	32.50	76.90		RCK000765-N8C0	SM 379301/1AX
80.00	100.00	30.00	80.40		RCK000800-N8C0	SM 393314/1AX
85.00	98.00	25.00	85.40		RCK000850-N8C0	SM 385334/1AX
85.00	105.00	30.00	85.40		RCK100850-N8C0	SM 413334/1AX
90.00	105.00	33.50	90.40		RCK100900-N8C0	SM 413354/1BX
90.00	105.00	25.00	90.40		RCK000900-N8C0	SM 413354/1AX
90.00	110.00	32.50	90.40		RCK300900-N8C0	SM 433354/2BX

Rod Diameter	Groove Diameter	Groove Width	Diameter		TSS Article No. Standard	Description
d_N h9	D H10	L +0.4	D_1 +-0.1			
90.00	110.00	30.00	90.40		RCK200900-N8C0	SM 433354/1AX
95.00	115.00	28.00	95.40		RCK000950-N8C0	SM 452374/1AX
100.00	114.30	24.20	100.40		RCK001000-N8C0	SM 450393/1AX
100.00	120.00	30.00	100.40		RCK101000-N8C0	SM 472393/1AX
105.00	118.00	25.00	105.40		RCK001050-N8C0	SM 464413/1AX
105.00	120.00	34.00	105.40		RCK101050-N8C0	SM 472413/1AX
110.00	130.00	32.50	110.40		RCK001100-N8C0	SM 511433/1AX
110.00	132.00	36.50	110.40		RCK101100-N8C0	SM 519433/1AX
115.00	130.00	30.00	115.70		RCK001150-N8C0	SM 511452/1AX
115.00	130.00	22.50	115.70		RCK101150-N8C0	SM 511452/2AX
120.00	135.00	22.50	120.70		RCK001200-N8C0	SM 531472/1AX
120.00	140.00	30.00	120.70	^	RCK101200-N8C0	SM 551472/1AX
125.00	145.00	29.60	125.70		RCK001250-N8C0	SM 570492/1AX
127.00	142.00	22.50	127.40		RCK001270-N8C0	SM 559500/1AX
130.00	150.00	28.00	130.70	^	RCK001300-N8C0	SM 590511/1AX
135.00	155.00	28.00	135.70		RCK001350-N8C0	SM 610531/1AX
140.00	160.00	28.00	140.70		RCK001400-N8C0	SM 629551/1AX
145.00	165.00	28.00	145.70		RCK001450-N8C0	SM 649570/1AX
150.00	170.00	28.00	150.70		RCK001500-N8C0	SM 669590/1AX
155.00	175.00	28.00	155.70		RCK001550-N8C0	SM 688610/1AX
158.50	180.00	28.00	159.20	^	RCK001585-N8C0	SM 708624/1AX
160.00	180.00	28.00	160.70		RCK001600-N8C0	SM 708629/1AX
165.00	185.00	30.00	165.70		RCK001650-N8C0	SM 729649/1AX
170.00	195.00	35.00	170.70		RCK001700-N8C0	SM 767669/1AX
180.00	205.00	35.00	180.70		RCK001800-N8C0	SM 807708/1AX
185.00	200.00	22.50	185.70		RCK001850-N8C0	SM 787728/2AX
185.00	210.00	35.00	210.70		RCK101850-N8C0	SM 826728/1AX
190.00	215.00	35.00	190.70		RCK001900-N8C0	SM 846748/2AX
200.00	225.00	35.00	200.70		RCK002000-N8C0	SM 885787/1AX
215.00	240.00	35.00	215.70	^	RCK002150-N8C0	SM 944846/1AX
220.00	245.00	35.00	220.70		RCK002200-N8C0	SM 964866/1AX
225.00	250.00	35.00	225.70		RCK002250-N8C0	SM 984886/1AX
230.00	255.00	35.00	230.70		RCK002300-N8C0	SM 1003905/1AX
240.00	265.00	35.00	240.70		RCK002400-N8C0	SM 1043945/1AX
250.00	275.00	35.00	250.70		RCK002500-N8C0	SM 1082984/1AX
260.00	280.00	30.00	260.70		RCK002600-N8C0	SM 11021024/1AX
265.00	290.00	35.00	265.70		RCK002650-N8C0	SM 11411043/1AX
275.00	300.00	35.00	275.70		RCK002750-N8C0	SM 11811082/1AX
280.00	305.00	35.00	280.70		RCK002800-N8C0	SM 12011102/1AX
300.00	325.00	35.00	300.70		RCK003000-N8C0	SM 12791181/1AX
335.00	360.00	35.00	335.70		RCK003350-N8C0	SM 14171318/1AX

^ Available upon request

Polypac® - Balsele

Single-acting

Compact Seal

Without and with Back-up Ring

Material:
Fabric Reinforced NBR + POM

Balsele

Description

The Balsele is a compact rod seal consisting of an elastomeric sealing element and an integrated fabric reinforced base.

Due to the radial pre-load, an excellent sealing performance will be achieved even at low pressures. The fabric reinforced base prevents the seal from extrusion. Where extrusion gaps are greater than those specified or for higher pressure conditions the series B/NEI with incorporated anti-extrusion ring shall be selected.

DESIGN

1) Sealing element manufactured from a specially developed nitrile compound particularly resistant to compression set. The sealing lips are produced to give optimum efficiency and wear resistance.

2) The reinforced base of the seal element is of cotton fabric impregnated with nitrile elastomer and vulcanized with the first sealing element, thus forming an integral component.

3) Guide rings or anti-extrusion rings are made from acetal resin. As previously described, these rings maintain the seal in the optimum position for maximum performance, and minimize all possible extrusion gaps.

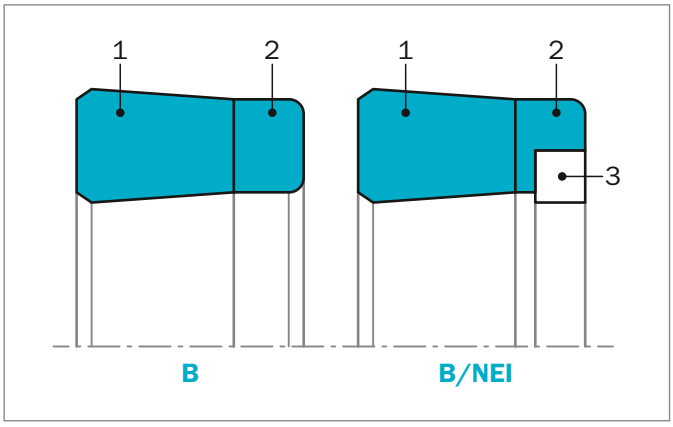

Figure 39: Balsele design

ADVANTAGES

- Small cross section
- Good chemical resistance
- Large size range
- No hydrolysis problems
- Wide temperature range

APPLICATION EXAMPLES

- Standard hydraulic cylinders (low to medium duty)
- Mobile hydraulic
- Water based fluids equipment
- After market
- Presses

OPERATING CONDITIONS

Pressure:	Up to 25 MPa (Type B) Up to 40 MPa (Type B/NEI)
Velocity:	Up to 0.5 m/s
Temperature:	-30 °C to +130 °C
Media:	Mineral oil, water, air
Groove Type:	Open

IMPORTANT NOTE

The above data are maximum values and cannot be used at the same time, e.g. the maximum operating speed depends on material type, pressure, temperature and gap value. Temperature range also depends on media.

MATERIALS

For type B:
NBR + cotton fabric
Material code N8C0

For type B/NEI:
NBR + cotton fabric
Back-up Ring material POM
Material code N8C0

DESIGN INSTRUCTIONS

Lead in chamfers
In order to avoid damage to the Balsele during installation, lead-in chamfers of min. 5 x 20° must be provided on the rods.

Table 30: Lead in chamfers

Rod Diameter	Lead in Chamfer
0 - 100	5 x 20°
101 - 200	7 x 20°
201 - 400	10 x 20°

Surface roughness

Table 31: Surface parameters

Parameter	Mating Surface µm	Groove Surface µm
R_{max}	0.63 - 2.50	< 16.0
$R_{z\ DIN}$	0.40 - 1.60	< 10.0
R_a	0.05 - 0.20	< 1.6

The material contact area R_{mr} should be approximately 50 to 70%, determined at a cut depth c = 0.25 x R_z, relative to a reference line of $C_{ref.}$ 5%.

Clearance

Table 32: Radial Clearance

Operating max. Pressure MPa	Radial Clearance S_{max}
16	0.20
25	0.10

For Type B/NEI (with Back-up Ring) the values can be double and with similar gap measure $S_{max.}$ = 0.10 a pressure of 40 MPa can be tightened.

Installation Recommendation

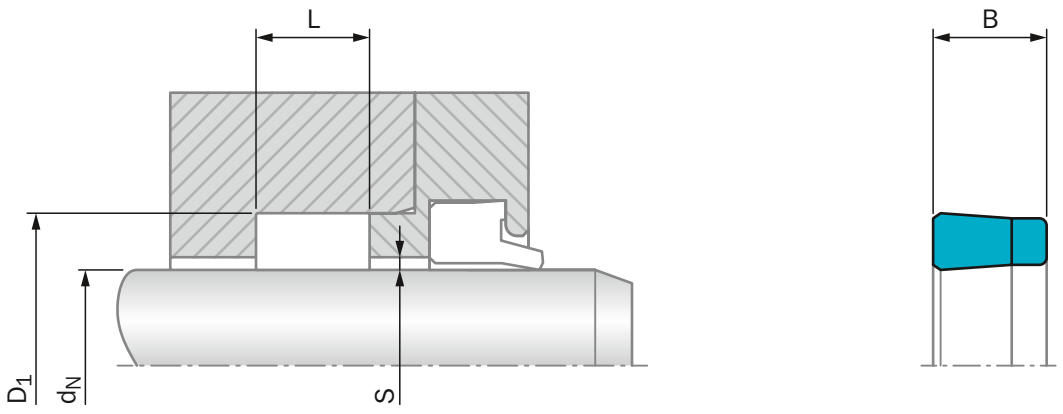

Figure 40: Installation Drawing

ORDERING EXAMPLE

Balsele Type B

Rod Diameter:	d_N = 6.0 mm
Groove Diameter:	D1 = 10.0 mm
Groove Width:	L = 5.0 mm
TSS Part No.:	RUM000060 -
Compound:	N8C0 (NBR + cotton fabric)

TSS Article No. RUM 0 0 0060 - N8C0

- TSS Series No.
- Design code
- Execution Mark
- Rod diameter x 10
- Quality Index (Standard)
- Material code (Seal Ring)

Polypac Ref. No.: B 039023

Table 33: Installation Dimensions / TSS Article No.

Rod Diameter	Groove Diameter	Groove Width	Seal Width	TSS Article No. Standard	Description
d_N h11	D_1 H11	L +0.1	B		
*4.76	12.70	6.40	5.75	RUM000047-N8C0	B 050018
*6.00	10.00	5.00	4.00	RUM000060-N8C0	B 039023
***6.00**	**14.00**	**6.40**	**5.90**	**RUM100060-N8C0**	**B 055024**
*6.35	14.28	6.85	6.30	RUM000063-N8C0	B 056025
*8.00	15.00	6.40	5.90	RUM000080-N8C0	B 059031
*10.00	17.00	6.40	5.90	RUM100100-N8C0	B 066039
*11.11	20.63	7.65	7.00	RUM000111-N8C0	B 081043
*12.00	18.00	7.50	7.00	RUM000120-N8C0	B 070047
*12.00	19.00	6.30	5.80	RUM100120-N8C0	B 075047
***12.00**	**20.00**	**6.40**	**5.80**	**RUM200120-N8C0**	**B 078047**
*12.70	19.05	5.25	4.80	RUM000127-N8C0	B 075050
*12.70	20.63	6.85	6.30	RUM100127-N8C0	B 081050
*12.70	22.22	7.65	7.00	RUM200127-N8C0	B 087050
*14.00	22.00	6.50	5.90	RUM000140-N8C0	B 086055

Rod Diameter	Groove Diameter	Groove Width	Seal Width	TSS Article No. Standard	Description
d_N h11	D_1 H11	L +0.1	B		
*14.28	23.81	7.65	7.00	RUM000142-N8C0	B 093056
*15.00	23.00	6.40	5.80	RUM000150-N8C0	B 090059
*15.87	22.22	5.25	4.80	RUM000158-N8C0	B 087062
*15.87	25.40	7.65	7.00	RUM100158-N8C0	B 100062
***16.00**	**24.00**	**6.40**	**5.90**	**RUM000160-N8C0**	**B 094063/1**
*16.00	24.00	7.00	6.50	RUM100160-N8C0	B 094063
*17.46	30.16	10.00	9.20	RUM000174-N8C0	B 118068
*18.00	25.00	8.00	7.30	RUM100180-N8C0	B 098070
***18.00**	**26.00**	**6.40**	**5.80**	**RUM200180-N8C0**	**B 102070/1**
*18.00	26.00	7.00	6.50	RUM300180-N8C0	B 102070
*18.00	28.00	6.30	5.70	RUM400180-N8C0	B 110070
*19.05	28.58	9.00	8.00	RUM100190-N8C0	B 112075
*19.05	31.75	8.50	7.70	RUM000190-N8C0	B 125075/1
*20.00	27.00	6.50	5.90	RUM000200-N8C0	B 106078
***20.00**	**28.00**	**6.30**	**5.70**	**RUM200200-N8C0**	**B 110078/1**
*20.00	28.00	7.00	6.50	RUM100200-N8C0	B 110078
*20.00	30.00	8.50	7.60	RUM300200-N8C0	B 118078
*20.00	35.00	11.50	10.60	RUM400200-N8C0	B 137078
*20.63	33.33	10.00	9.20	RUM000206-N8C0	B 131081
*22.00	30.00	6.50	5.90	RUM000220-N8C0	B 118086/1
*22.00	30.00	7.00	6.50	RUM100220-N8C0	B 118086
*22.00	35.00	10.00	9.20	RUM400220-N8C0	B 137086
*22.22	31.75	9.20	8.60	RUM000222-N8C0	B 125087
*23.81	36.51	10.00	9.20	RUM000238-N8C0	B 143093
*24.00	32.00	7.50	6.90	RUM000240-N8C0	B 125094
*24.00	34.00	6.50	5.90	RUM100240-N8C0	B 134094
25.00	**33.00**	**6.40**	**5.80**	**RUM000250-N8C0**	**B 129098/1**
*25.00	35.00	9.00	8.40	RUM100250-N8C0	B 137098
*25.00	38.00	10.00	9.15	RUM200250-N8C0	B 149098
*25.00	44.00	12.50	11.40	RUM300250-N8C0	B 173098
*25.40	31.75	5.25	4.70	RUM000254-N8C0	B 125100
*25.40	34.92	6.85	6.20	RUM100254-N8C0	B 137100
*25.40	38.10	10.00	9.20	RUM200254-N8C0	B 150100
*25.40	41.27	11.60	10.70	RUM300254-N8C0	B 162100
*26.00	40.00	10.00	9.20	RUM000260-N8C0	B 157102/1
*27.00	35.00	6.50	5.90	RUM000270-N8C0	B 137106
28.00	**36.00**	**6.40**	**5.80**	**RUM000280-N8C0**	**B 141110**
*28.19	39.68	8.00	7.30	RUM000281-N8C0	B 156111
*28.57	41.27	10.00	9.20	RUM100285-N8C0	B 162112
*28.57	44.45	11.60	10.70	RUM200285-N8C0	B 175112
30.00	37.50	6.50	6.00	RUM100300-N8C0	B 147118
30.00	38.00	6.40	5.80	RUM000300-N8C0	B 149118

Rod Diameter	Groove Diameter	Groove Width	Seal Width	TSS Article No. Standard	Description
d_N h11	D_1 H11	L +0.1	B		
*30.00	40.00	7.50	6.80	RUM300300-N8C0	B 157118
*30.00	41.60	8.00	7.20	RUM500300-N8C0	B 164118
*30.00	45.00	9.00	8.50	RUM600300-N8C0	B 177118/1
*30.00	50.00	14.50	13.50	RUM700300-N8C0	B 196118
*31.75	47.62	11.60	10.60	RUM200317-N8C0	B 187125
32.00	40.00	6.30	5.80	RUM000320-N8C0	B 157125/1
*32.00	40.00	9.00	8.50	RUM100320-N8C0	B 157125
*34.92	50.80	10.00	9.10	RUM100349-N8C0	B 200137/1
*34.92	50.80	11.60	10.60	RUM200349-N8C0	B 200137/2
35.00	43.00	6.50	6.00	RUM000350-N8C0	B 169137
*35.00	45.00	8.00	7.20	RUM100350-N8C0	B 177137/5
*35.00	45.00	13.50	12.80	RUM300350-N8C0	B 177137/2
*35.00	50.00	11.50	10.60	RUM400350-N8C0	B 196137
36.00	43.00	6.50	6.00	RUM000360-N8C0	B 169141
36.00	44.00	6.40	5.90	RUM100360-N8C0	B 173141
*37.72	50.80	9.00	8.20	RUM000377-N8C0	B 200148
*38.00	50.00	9.50	8.80	RUM000380-N8C0	B 196149
*38.10	50.80	12.40	11.90	RUM100381-N8C0	B 200150/1
*38.10	53.97	11.50	10.50	RUM400381-N8C0	B 212150/1
*38.10	53.97	12.83	12.00	RUM500381-N8C0	B 212150/2
40.00	48.00	6.50	6.00	RUM000400-N8C0	B 188157
40.00	**50.00**	**8.00**	**7.40**	**RUM100400-N8C0**	**B 196157/3**
*40.00	50.00	11.00	10.30	RUM300400-N8C0	B 196157
*40.00	50.00	13.50	12.80	RUM400400-N8C0	B 196157/2
*40.00	60.00	14.50	13.30	RUM700400-N8C0	B 236157
41.27	57.12	11.60	10.70	RUM000412-N8C0	B 225162
42.00	50.00	6.40	6.00	RUM000420-N8C0	B 196165
*42.92	55.50	8.90	8.10	RUM000429-N8C0	B 218169
43.00	53.00	9.00	8.40	RUM000430-N8C0	B 208169
44.00	53.00	8.00	7.30	RUM000440-N8C0	B 208173
*44.45	60.32	11.60	10.70	RUM100444-N8C0	B 237175
*44.45	61.91	11.60	10.60	RUM200444-N8C0	B 243175
45.00	53.00	6.50	6.00	RUM000450-N8C0	B 208177
45.00	**55.00**	**8.00**	**7.30**	**RUM100450-N8C0**	**B 216177**
*45.00	63.00	11.00	10.00	RUM500450-N8C0	B 248177
*45.00	65.00	14.50	13.30	RUM600450-N8C0	B 255177
45.97	55.37	8.33	7.60	RUM000459-N8C0	B 218181
46.00	56.00	8.00	7.30	RUM100460-N8C0	B 220181
*47.23	60.32	10.00	9.20	RUM000472-N8C0	B 237186
*47.62	63.50	11.50	10.60	RUM000476-N8C0	B 250187
*48.00	60.00	7.00	6.30	RUM000480-N8C0	B 236188
*50.00	58.00	12.50	12.00	RUM000500-N8C0	B 228196

Rod Diameter	Groove Diameter	Groove Width	Seal Width	TSS Article No. Standard	Description
d_N h11	D_1 H11	L +0.1	B		
50.00	**60.00**	**8.00**	**7.30**	**RUM100500-N8C0**	**B 236196**
*50.00	60.00	10.00	9.30	RUM200500-N8C0	B 236196/1
*50.00	62.00	9.50	8.50	RUM300500-N8C0	B 244196/1
*50.00	64.50	11.50	10.50	RUM400500-N8C0	B 254196
*50.00	70.00	14.50	13.30	RUM600500-N8C0	B 275196
50.80	60.35	11.00	10.30	RUM000508-N8C0	B 237200
*50.80	66.67	11.50	10.50	RUM100508-N8C0	B 262200
*53.97	73.02	14.80	13.80	RUM000539-N8C0	B 287212
55.00	70.00	10.50	9.60	RUM200550-N8C0	B 275216
*55.00	75.00	14.50	13.30	RUM300550-N8C0	B 295216
56.00	66.00	8.00	7.30	RUM000560-N8C0	B 259220
*56.00	76.00	14.50	13.40	RUM200560-N8C0	B 299220
57.00	67.00	8.00	7.30	RUM000570-N8C0	B 263224
57.15	69.85	10.00	9.20	RUM000571-N8C0	B 275225
*57.15	73.02	11.50	10.60	RUM100571-N8C0	B 287225
*57.15	76.20	10.00	8.90	RUM200571-N8C0	B 300225
*57.15	76.20	13.50	12.40	RUM300571-N8C0	B 300225/1
*57.15	76.20	14.28	13.20	RUM400571-N8C0	B 300225/2
60.00	69.50	7.00	6.40	RUM000600-N8C0	B 273236
60.00	70.00	8.00	7.50	RUM100600-N8C0	B 275236
60.00	71.00	9.60	9.00	RUM400600-N8C0	B 279236
60.00	72.00	10.00	9.20	RUM500600-N8C0	B 283236
60.00	75.00	13.00	12.10	RUM600600-N8C0	B 295236
*60.00	80.00	14.50	13.50	RUM700600-N8C0	B 314236
*60.32	79.37	14.80	13.80	RUM000603-N8C0	B 312237
61.00	69.00	8.50	7.90	RUM000610-N8C0	B 271240
63.00	75.00	9.60	8.80	RUM000630-N8C0	B 295248/1
*63.00	83.00	14.50	13.30	RUM300630-N8C0	B 326248
*63.50	82.55	14.28	13.13	RUM200635-N8C0	B 325250/1
65.00	75.00	8.50	7.80	RUM000650-N8C0	B 295255/1
65.00	75.00	13.50	12.30	RUM100650-N8C0	B 295255
65.00	77.00	9.60	8.80	RUM200650-N8C0	B 303255
65.00	80.00	11.50	10.60	RUM300650-N8C0	B 314255
*65.00	85.00	14.50	13.50	RUM600650-N8C0	B 334255
*65.00	95.00	17.50	15.80	RUM500650-N8C0	B 374255
*66.00	80.00	11.00	10.10	RUM000660-N8C0	B 314259
*66.67	85.72	14.80	13.70	RUM000667-N8C0	B 337262
68.00	76.00	8.00	7.40	RUM000680-N8C0	B 299267
70.00	80.00	8.00	7.30	RUM100700-N8C0	B 314275/1
70.00	82.00	9.60	8.80	RUM300700-N8C0	B 322275/1
70.00	84.00	12.50	11.20	RUM500700-N8C0	B 330275
70.00	85.00	12.00	11.00	RUM600700-N8C0	B 334275/1

Rod Diameter	Groove Diameter	Groove Width	Seal Width	TSS Article No. Standard	Description
d_N h11	D_1 H11	L +0.1	B		
*70.00	90.00	14.50	13.50	RUM800700-N8C0	B 354275
*73.02	88.90	12.50	11.50	RUM000730-N8C0	B 350287
75.00	85.00	8.00	7.30	RUM000750-N8C0	B 334295/1
75.00	89.50	11.50	10.50	RUM200750-N8C0	B 352295
75.00	90.00	11.50	10.60	RUM300750-N8C0	B 354295
*75.00	95.00	11.00	10.00	RUM500750-N8C0	B 374295/1
76.00	84.00	8.50	7.90	RUM000760-N8C0	B 330299
76.20	88.90	9.40	8.70	RUM000762-N8C0	B 350300
*76.20	95.25	14.80	13.70	RUM200762-N8C0	B 375300
77.00	87.00	8.00	7.30	RUM000770-N8C0	B 342303
79.00	88.50	7.00	6.40	RUM000790-N8C0	B 348311
80.00	90.00	8.00	7.30	RUM000800-N8C0	B 354314
80.00	92.00	9.60	8.80	RUM100800-N8C0	B 362314
80.00	96.00	10.50	9.60	RUM400800-N8C0	B 377314
80.00	100.00	14.50	13.40	RUM600800-N8C0	B 393314
81.00	91.00	8.00	7.30	RUM000810-N8C0	B 358318
82.55	101.60	14.80	13.70	RUM000825-N8C0	B 400325/1
84.00	94.00	8.00	7.30	RUM100840-N8C0	B 370330
85.00	95.00	8.00	7.30	RUM000850-N8C0	B 374334
85.00	95.00	8.50	7.80	RUM100850-N8C0	B 374334/1
85.00	97.00	9.60	9.00	RUM200850-N8C0	B 381334
85.00	100.00	12.00	10.80	RUM300850-N8C0	B 393334/1
85.00	105.00	14.50	13.40	RUM400850-N8C0	B 413334
*85.00	110.00	13.50	12.20	RUM500850-N8C0	B 433334
*85.72	104.77	14.80	13.80	RUM000857-N8C0	B 412337
*85.72	111.12	19.50	18.20	RUM100857-N8C0	B 437337
88.00	96.00	8.00	7.50	RUM000880-N8C0	B 377346
88.90	101.60	10.00	9.20	RUM000889-N8C0	B 400350
*88.90	107.95	12.70	11.60	RUM100889-N8C0	B 425350
90.00	102.00	9.60	8.80	RUM100900-N8C0	B 401354
90.00	110.00	12.50	11.40	RUM500900-N8C0	B 433354
91.00	99.00	8.50	7.90	RUM000910-N8C0	B 389358
*92.07	117.45	13.20	12.00	RUM100920-N8C0	B 462362/1
95.00	105.00	11.00	10.30	RUM000950-N8C0	B 413374
95.00	107.00	12.50	11.70	RUM100950-N8C0	B 421374
95.00	110.00	12.50	11.36	RUM200950-N8C0	B 433374
95.25	114.30	13.50	12.40	RUM000952-N8C0	B 450375
*95.25	120.65	19.50	18.20	RUM100952-N8C0	B 475375
96.00	105.00	8.50	7.90	RUM000960-N8C0	B 413377
96.00	108.00	12.50	11.70	RUM100960-N8C0	B 425377
97.00	108.00	12.50	11.80	RUM000970-N8C0	B 425381
98.00	107.50	7.00	6.20	RUM000980-N8C0	B 423385

Rod Diameter	Groove Diameter	Groove Width	Seal Width	TSS Article No. Standard	Description
d_N h11	D_1 H11	L +0.1	B		
100.00	113.00	13.50	12.70	RUM001000-N8C0	B 444393
100.00	115.00	11.50	10.60	RUM101000-N8C0	B 452393/1
100.00	120.00	12.00	11.20	RUM301000-N8C0	B 472393/1
100.00	120.00	14.50	13.40	RUM401000-N8C0	B 472393
101.50	123.82	17.18	16.00	RUM001015-N8C0	B 487400
101.60	127.00	19.50	18.00	RUM001016-N8C0	B 500400
103.00	115.00	12.50	11.80	RUM001030-N8C0	B 452405
104.00	120.00	12.00	11.20	RUM001040-N8C0	B 472409
104.00	130.00	19.50	18.00	RUM101040-N8C0	B 511409
105.00	115.00	11.00	10.00	RUM001050-N8C0	B 452413
105.00	117.00	12.50	11.80	RUM101050-N8C0	B 460413
105.00	120.00	12.00	11.00	RUM201050-N8C0	B 472413
105.00	125.00	12.50	11.40	RUM301050-N8C0	B 492413
106.00	116.00	8.50	7.80	RUM001060-N8C0	B 457417
107.00	115.00	8.00	7.40	RUM001070-N8C0	B 452421
107.95	133.35	19.00	17.70	RUM001079-N8C0	B 525425
110.00	125.00	12.00	11.20	RUM001100-N8C0	B 492433
110.00	140.00	16.50	15.00	RUM301100-N8C0	B 551433
114.30	133.35	12.40	11.40	RUM001143-N8C0	B 525450
114.30	139.70	19.50	18.00	RUM101143-N8C0	B 550450
115.00	125.00	8.00	7.40	RUM001150-N8C0	B 492452
115.00	135.00	16.00	14.80	RUM101150-N8C0	B 531452
118.00	130.00	12.50	11.80	RUM001180-N8C0	B 511464
120.00	130.00	8.00	7.40	RUM001200-N8C0	B 511472
120.00	132.70	10.00	9.20	RUM101200-N8C0	B 522472
120.00	140.00	12.50	11.40	RUM301200-N8C0	B 551472
120.65	146.05	19.50	18.20	RUM001206-N8C0	B 575475
123.00	133.00	8.00	7.40	RUM001230-N8C0	B 523484
125.00	135.00	8.50	7.80	RUM001250-N8C0	B 531492
125.00	140.00	12.00	11.00	RUM101250-N8C0	B 551492
126.00	134.00	8.00	7.50	RUM001260-N8C0	B 527496
126.00	136.00	8.50	7.80	RUM101260-N8C0	B 535496
127.00	139.70	10.00	8.70	RUM001270-N8C0	B 550500
127.00	152.40	19.50	18.20	RUM201270-N8C0	B 600500
130.00	140.00	8.00	7.40	RUM001300-N8C0	B 551511
131.00	144.00	13.50	12.70	RUM001310-N8C0	B 566515
133.35	158.75	14.00	12.60	RUM001333-N8C0	B 625525/1
139.70	165.10	19.50	18.20	RUM001397-N8C0	B 650550
140.00	155.00	13.00	12.00	RUM001400-N8C0	B 610551
146.05	171.45	19.50	18.20	RUM101460-N8C0	B 675575
152.40	177.80	19.50	18.20	RUM001524-N8C0	B 700600
152.40	184.15	25.80	24.20	RUM101524-N8C0	B 725600

Rod Diameter	Groove Diameter	Groove Width	Seal Width	TSS Article No. Standard	Description
d_N h11	D_1 H11	L +0.1	B		
155.00	170.00	9.50	8.55	RUM001550-N8C0	B 669610
158.75	190.50	25.80	24.20	RUM001587-N8C0	B 750625
160.00	174.00	11.50	10.60	RUM001600-N8C0	B 685629
163.00	178.00	13.00	12.00	RUM001630-N8C0	B 700641
165.10	177.80	10.00	9.20	RUM001651-N8C0	B 700650
165.10	196.85	25.80	24.20	RUM101651-N8C0	B 775650
170.00	182.70	10.00	9.20	RUM001700-N8C0	B 719669
171.45	203.20	25.80	24.20	RUM001714-N8C0	B 800675
175.00	200.00	14.50	13.10	RUM001750-N8C0	B 787688
177.80	203.20	22.70	21.40	RUM001778-N8C0	B 800700
180.00	195.00	12.50	11.50	RUM001800-N8C0	B 767708
184.15	215.90	25.80	24.20	RUM001841-N8C0	B 850725
187.00	202.00	11.50	10.60	RUM001870-N8C0	B 795736
188.00	203.00	13.00	12.00	RUM001880-N8C0	B 799740
190.50	222.25	25.80	24.20	RUM001905-N8C0	B 875750
196.00	208.70	9.50	8.70	RUM001960-N8C0	B 821771
196.85	228.60	25.80	24.20	RUM001968-N8C0	B 900775
203.20	235.00	25.80	24.20	RUM002032-N8C0	B 925800
214.00	229.00	13.00	12.10	RUM002140-N8C0	B 901842
215.90	247.65	25.80	24.20	RUM002159-N8C0	B 975850
222.25	254.00	25.80	24.20	RUM002222-N8C0	B 1000875
224.00	236.70	9.50	8.70	RUM002240-N8C0	B 931881
228.60	260.35	25.80	24.20	RUM002286-N8C0	B 1025900
238.00	258.00	15.50	14.40	RUM002380-N8C0	B 1015937
240.00	255.00	13.00	12.00	RUM002400-N8C0	B 1003944
241.30	273.05	25.80	24.20	RUM002413-N8C0	B 1075950
250.00	290.00	25.40	23.30	RUM002500-N8C0	B 1141984
254.00	285.75	25.80	24.20	RUM002540-N8C0	B 11251000
260.35	292.10	25.80	24.20	RUM002603-N8C0	B 11501025
266.70	298.45	25.80	24.20	RUM002667-N8C0	B 11751050
273.05	304.80	25.80	24.20	RUM002730-N8C0	B 12001075
279.40	311.15	25.80	24.20	RUM002794-N8C0	B 12251100
280.00	320.00	22.50	20.30	RUM002800-N8C0	B 12591102
285.75	317.50	25.80	24.20	RUM002857-N8C0	B 12501125
298.45	330.20	25.80	24.20	RUM002984-N8C0	B 13001175
304.80	336.55	25.80	24.20	RUM003048-N8C0	B 13251200
318.00	355.00	13.00	11.90	RUM003180-N8C0	B 13191252
320.00	**360.00**	**25.50**	**23.30**	**RUM003200-N8C0**	**B 14171259**
350.00	385.00	25.40	23.50	RUM003500-N8C0	B 15151377
375.00	415.00	25.40	23.20	RUM003750-N8C0	B 16331476
445.00	482.00	35.50	33.50	RUM004450-N8C0	B 19001750

Installation Recommendation

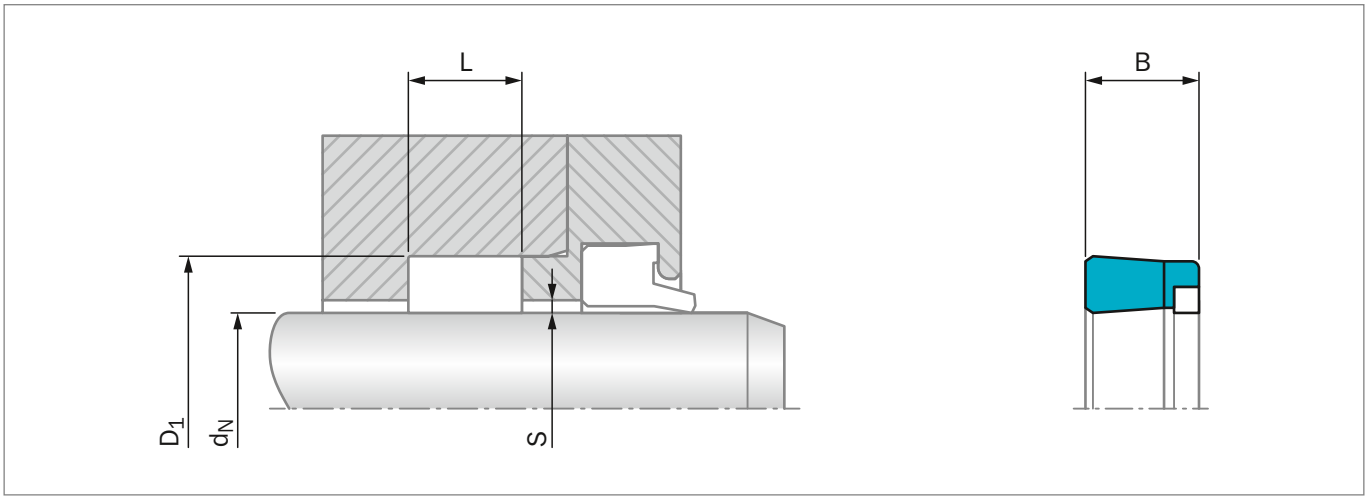

Figure 41: Installation Drawing

ORDERING EXAMPLE

Balsele Type B/NEI

Rod Diameter:	d_N = 20.0 mm
Groove Diameter:	D_1 = 28.0 mm
Groove Width:	L = 7.0 mm
TSS Part No.:	RUM1E0200 -
Compound:	N8C0 (NBR + cotton fabric and POM Back-up Ring)

TSS Article No. RUM 1 E 0200 - N8C0

TSS Series No.
Design Code
Execution Mark
Rod Diameter x 10
Quality Index (Standard)
Material Code (Seal Ring)
Polypac Ref. No.: B 110078/NEI

Table 34: Installation Dimensions / TSS Article No.

Rod Diameter	Groove Diameter	Groove Width	Seal Width	TSS Article No. Standard	Description
d_N h11	D_1 H11	L +0.1	B		
*12.00	23.00	7.50	6.80	RUM3E0120-N8C0	B090047/NEI
*15.00	27.00	7.00	6.30	RUM1E0150-N8C0	B106059/NEI
*16.00	24.00	7.00	6.50	RUM1E0160-N8C0	B094063/NEI
*16.00	28.00	7.50	6.90	RUM2E0160-N8C0	B110062/NEI
***18.00**	**28.00**	**6.30**	**5.70**	**RUM4E0180-N8C0**	**B110070/NEI**
*18.00	30.00	7.50	6.90	RUM5E0180-N8C0	B118070/NEI
***20.00**	**28.00**	**6.30**	**5.70**	**RUM2E0200-N8C0**	**B110078/1/NEI**
*20.00	28.00	7.00	6.50	RUM1E0200-N8C0	B110078/NEI
*20.00	30.00	8.50	7.60	RUM3E0200-N8C0	B118078/NEI
*22.00	30.00	7.00	6.50	RUM1E0220-N8C0	B118086/NEI
*22.00	32.00	10.00	9.00	RUM2E0220-N8C0	B125086/NEI
*22.00	34.00	9.50	8.90	RUM3E0220-N8C0	B133086/NEI

Rod Diameter	Groove Diameter	Groove Width	Seal Width	TSS Article No. Standard	Description
d_N h11	D_1 H11	L +0.1	B		
*22.00	35.00	10.00	9.20	RUM4E0220-N8C0	B137086/NEI
***25.00**	**33.00**	**6.40**	**5.80**	**RUM0E0250-N8C0**	**B129098/1/NEI**
*25.00	35.00	9.00	8.40	RUM1E0250-N8C0	B137098/NEI
*25.00	38.00	10.00	9.15	RUM2E0250-N8C0	B149098/NEI
*25.40	38.10	10.00	9.20	RUM2E0254-N8C0	B150100/NEI
*28.00	36.00	6.40	5.80	RUM0E0280-N8C0	B141110/NEI
***28.00**	**38.00**	**8.00**	**7.40**	**RUM1E0280-N8C0**	**B149110/1/NEI**
*28.00	40.00	9.50	8.90	RUM2E0280-N8C0	B157110/NEI
*28.00	41.00	10.00	9.30	RUM3E0280-N8C0	B161110/NEI
*28.57	39.68	9.25	8.50	RUM0E0285-N8C0	B156112/NEI
*30.00	38.00	6.40	5.80	RUM0E0300-N8C0	B149118/NEI
*30.00	40.00	7.50	6.80	RUM3E0300-N8C0	B157118/NEI
*30.00	40.00	10.50	9.80	RUM4E0300-N8C0	B157118/1/NEI
*30.00	45.00	9.00	8.50	RUM6E0300-N8C0	B177118/1/NEI
*30.00	50.00	14.50	13.50	RUM7E0300-N8C0	B196118/NEI
*31.75	47.62	11.60	10.60	RUM2E0317-N8C0	B187125/NEI
*32.00	40.00	6.30	5.80	RUM0E0320-N8C0	B157125/1/NEI
*32.00	40.00	9.00	8.50	RUM1E0320-N8C0	B157125/NEI
*32.00	42.00	8.50	7.80	RUM2E0320-N8C0	B165125/1/NEI
*32.00	42.00	11.00	10.30	RUM3E0320-N8C0	B165125/NEI
*32.00	45.00	10.00	9.50	RUM4E0320-N8C0	B177125/NEI
*34.92	50.80	8.50	7.50	RUM0E0349-N8C0	B200137/4/NEI
*34.92	50.80	11.60	10.60	RUM2E0349-N8C0	B200137/2/NEI
35.00	43.00	6.50	6.00	RUM0E0350-N8C0	B169137/NEI
*35.00	45.00	10.50	9.80	RUM2E0350-N8C0	B177137/3/NEI
*35.00	50.00	11.50	10.60	RUM4E0350-N8C0	B196137/NEI
36.00	43.00	6.50	6.00	RUM0E0360-N8C0	B169141/NEI
36.00	44.00	6.40	5.90	RUM1E0360-N8C0	B173141/NEI
*36.00	46.00	8.50	7.80	RUM2E0360-N8C0	B181141/NEI
*36.00	48.00	9.50	8.70	RUM3E0360-N8C0	B188141/NEI
*36.00	48.00	12.00	11.20	RUM4E0360-N8C0	B188141/1/NEI
*38.10	50.80	10.00	9.22	RUM2E0381-N8C0	B200150/NEI
*38.10	53.97	10.50	9.50	RUM3E0381-N8C0	B212150/5/NEI
40.00	48.00	6.50	6.00	RUM0E0400-N8C0	B188157/NEI
***40.00**	**50.00**	**8.00**	**7.40**	**RUM1E0400-N8C0**	**B196157/3/NEI**
*40.00	50.00	10.50	9.80	RUM2E0400-N8C0	**B196157/1/NEI**
*40.00	50.00	11.00	10.30	RUM3E0400-N8C0	B196157/NEI
***40.00**	**55.00**	**8.00**	**7.00**	**RUM5E0400-N8C0**	**B216157/NEI**
*40.00	55.00	11.00	10.10	RUM6E0400-N8C0	B216157/1/NEI
*40.00	60.00	14.50	13.30	RUM7E0400-N8C0	B236157/NEI
*42.00	52.00	9.00	8.40	RUM1E0420-N8C0	B204165/NEI
44.45	53.97	7.62	7.00	RUM0E0444-N8C0	B212175/1/NEI

Rod Diameter	Groove Diameter	Groove Width	Seal Width	TSS Article No. Standard	Description
d_N h11	D_1 H11	L +0.1	B		
*44.45	60.32	11.60	10.70	RUM1E0444-N8C0	B237175/NEI
45.00	**55.00**	**8.00**	**7.30**	**RUM1E0450-N8C0**	**B216177/NEI**
45.00	55.00	11.00	10.00	RUM2E0450-N8C0	B216177/1/NEI
*45.00	57.00	10.00	9.00	RUM3E0450-N8C0	B224177/NEI
*45.00	60.00	10.50	9.60	RUM4E0450-N8C0	B236177/NEI
*45.00	65.00	14.50	13.30	RUM6E0450-N8C0	B255177/NEI
50.00	**60.00**	**8.00**	**7.30**	**RUM1E0500-N8C0**	**B236196/NEI**
50.00	60.00	10.00	9.30	RUM2E0500-N8C0	B236196/1/NEI
*50.00	62.00	9.50	8.50	RUM3E0500-N8C0	B244196/1/NEI
50.00	65.00	11.00	10.10	RUM5E0500-N8C0	B255196/NEI
*50.00	70.00	14.50	13.30	RUM6E0500-N8C0	B275196/NEI
*54.00	66.00	9.50	8.70	RUM0E0540-N8C0	B259212/NEI
55.00	65.00	8.00	7.30	RUM0E0550-N8C0	B255216/1/NEI
55.00	65.00	11.00	10.30	RUM1E0550-N8C0	B255216/NEI
55.00	70.00	10.50	9.60	RUM2E0550-N8C0	B275216/NEI
*55.00	75.00	14.50	13.30	RUM3E0550-N8C0	B295216/NEI
*56.00	71.00	10.50	9.60	RUM1E0560-N8C0	B279220/NEI
*56.00	76.00	14.50	13.40	RUM2E0560-N8C0	B299220/NEI
57.15	69.85	10.00	9.20	RUM0E0571-N8C0	B275225/NEI
60.00	69.50	7.00	6.40	RUM0E0600-N8C0	B273236/NEI
60.00	70.00	8.00	6.40	RUM1E0600-N8C0	B275236/NEI
60.00	70.00	11.00	10.30	RUM2E0600-N8C0	B275236/1/NEI
60.00	70.00	13.00	12.25	RUM3E0600-N8C0	B275236/2/NEI
60.00	72.00	10.00	9.20	RUM5E0600-N8C0	B283236/NEI
*60.00	75.00	13.00	12.10	RUM6E0600-N8C0	B295236/NEI
*60.00	80.00	14.50	13.50	RUM7E0600-N8C0	B314236/NEI
63.00	75.00	11.00	10.20	RUM1E0630-N8C0	B295248/NEI
***63.00**	**78.00**	**12.50**	**11.50**	**RUM2E0630-N8C0**	**B307248/NEI**
*63.00	83.00	14.50	13.30	RUM3E0630-N8C0	B326248/NEI
63.50	76.20	8.50	7.70	RUM0E0635-N8C0	B300250/NEI
*63.50	77.78	11.50	10.70	RUM1E0635-N8C0	B306250/NEI
65.00	75.00	13.50	12.30	RUM1E0650-N8C0	B295255/NEI
65.00	77.00	9.60	8.80	RUM2E0650-N8C0	B303255/NEI
*65.00	80.00	11.50	10.60	RUM3E0650-N8C0	B314255/NEI
*65.00	80.00	12.50	11.50	RUM4E0650-N8C0	B314255/2/NEI
70.00	80.00	8.00	7.30	RUM0E0700-N8C0	B314275/1/NEI
70.00	80.00	13.00	12.30	RUM2E0700-N8C0	B314275/NEI
70.00	82.00	10.50	9.70	RUM4E0700-N8C0	B322275/NEI
70.00	84.00	12.50	11.20	RUM5E0700-N8C0	B330275/NEI
*70.00	85.00	12.00	11.00	RUM6E0700-N8C0	B334275/1/NEI
***70.00**	**85.00**	**12.50**	**11.50**	**RUM7E0700-N8C0**	**B334275/NEI**
*70.00	90.00	14.50	13.50	RUM8E0700-N8C0	B354275/NEI

Rod Diameter	Groove Diameter	Groove Width	Seal Width	TSS Article No. Standard	Description
d_N h11	D_1 H11	L +0.1	B		
*72.00	87.00	11.00	10.00	RUM0E0720-N8C0	B342283/NEI
75.00	85.00	11.00	10.30	RUM1E0750-N8C0	B334295/2/NEI
75.00	90.00	11.50	10.60	RUM3E0750-N8C0	B354295/NEI
75.00	90.00	12.80	11.80	RUM4E0750-N8C0	B354295/1/NEI
*75.00	95.00	14.50	13.50	RUM6E0750-N8C0	B374295/NEI
80.00	93.00	14.50	13.50	RUM2E0800-N8C0	B366314/NEI
80.00	95.00	12.00	11.10	RUM3E0800-N8C0	B374314/NEI
80.00	96.00	10.50	9.60	RUM4E0800-N8C0	B377314/NEI
*80.00	100.00	12.00	10.80	RUM5E0800-N8C0	B393314/1/NEI
*80.00	100.00	14.50	13.40	RUM6E0800-N8C0	B393314/NEI
85.00	95.00	8.00	7.30	RUM0E0850-N8C0	B374334/NEI
85.00	97.00	9.60	9.00	RUM2E0850-N8C0	B381334/NEI
85.00	100.00	12.00	10.80	RUM3E0850-N8C0	B393334/1/NEI
*85.00	105.00	14.50	13.40	RUM4E0850-N8C0	B413334/NEI
*88.90	114.30	19.50	18.20	RUM2E0889-N8C0	B450350/2/NEI
90.00	**105.00**	**9.50**	**8.70**	**RUM2E0900-N8C0**	**B413354/NEI**
90.00	**105.00**	**12.50**	**11.60**	**RUM3E0900-N8C0**	**B413354/1/NEI**
90.00	106.20	10.80	9.80	RUM4E0900-N8C0	B418354/NEI
***90.00**	**110.00**	**12.50**	**11.40**	**RUM5E0900-N8C0**	**B433354/NEI**
*92.07	111.12	12.50	11.30	RUM0E0920-N8C0	B437362/NEI
95.00	105.00	11.00	10.30	RUM0E0950-N8C0	B413374/NEI
95.00	112.00	12.00	11.10	RUM3E0950-N8C0	B441374/NEI
*95.00	115.00	14.50	13.30	RUM4E0950-N8C0	B452374/NEI
100.00	113.00	13.50	12.70	RUM0E1000-N8C0	B444393/NEI
100.00	115.00	11.50	10.60	RUM1E1000-N8C0	B452393/1/NEI
100.00	115.00	12.50	11.50	RUM2E1000-N8C0	B452393/NEI
100.00	120.00	12.00	11.20	RUM3E1000-N8C0	B472393/1/NEI
100.00	120.00	14.50	13.40	RUM4E1000-N8C0	B472393/NEI
105.00	115.00	11.00	10.00	RUM0E1050-N8C0	B452413/NEI
105.00	125.00	12.50	11.40	RUM3E1050-N8C0	B492413/NEI
110.00	125.00	12.00	11.20	RUM0E1100-N8C0	B492433/NEI
110.00	**130.00**	**12.50**	**11.40**	**RUM1E1100-N8C0**	**B511433/NEI**
110.00	135.00	15.50	14.20	RUM2E1100-N8C0	B531433/NEI
120.00	132.70	10.00	9.20	RUM1E1200-N8C0	B522472/NEI
120.00	135.00	12.50	11.60	RUM2E1200-N8C0	B531472/NEI
120.00	140.00	12.50	11.40	RUM3E1200-N8C0	B551472/NEI
120.00	145.00	18.80	17.50	RUM4E1200-N8C0	B570472/NEI
125.00	150.00	14.50	13.10	RUM2E1250-N8C0	B590492/NEI
130.00	145.00	13.00	12.00	RUM2E1300-N8C0	B570511/1/NEI
130.00	145.00	15.00	14.00	RUM3E1300-N8C0	B570511/NEI
130.00	150.00	16.00	14.80	RUM4E1300-N8C0	B590511/NEI
133.35	158.75	14.00	12.60	RUM0E1333-N8C0	B625525/1/NEI

Rod Diameter	Groove Diameter	Groove Width	Seal Width	TSS Article No. Standard	Description
d_N h11	D_1 H11	L +0.1	B		
135.00	150.00	14.00	13.00	RUM0E1350-N8C0	B590531/1/NEI
135.00	155.00	16.00	14.80	RUM1E1350-N8C0	B610531/NEI
135.00	160.00	14.00	12.70	RUM2E1350-N8C0	B629531/NEI
140.00	155.00	13.00	12.00	RUM0E1400-N8C0	B610551/NEI
140.00	**160.00**	**12.50**	**11.40**	**RUM1E1400-N8C0**	**B629551/NEI**
140.00	160.00	14.50	13.40	RUM2E1400-N8C0	B629551/1/NEI
140.00	170.00	22.80	21.20	RUM3E1400-N8C0	B669551/NEI
145.00	157.70	10.00	9.20	RUM0E1450-N8C0	B620570/NEI
150.00	170.00	14.50	13.40	RUM1E1500-N8C0	B669590/1/NEI
160.00	175.00	16.00	15.50	RUM1E1600-N8C0	B688629/NEI
160.00	180.00	14.50	13.30	RUM2E1600-N8C0	B708629/NEI
165.00	184.00	16.00	14.80	RUM0E1650-N8C0	B728649/NEI
165.00	195.00	20.40	18.70	RUM1E1650-N8C0	B767649/NEI
175.00	200.00	23.00	21.55	RUM1E1750-N8C0	B787688/1/NEI
180.00	200.00	14.50	13.30	RUM1E1800-N8C0	B787708/NEI
180.00	210.00	20.50	18.90	RUM2E1800-N8C0	B826708/1/NEI
190.00	210.00	14.50	13.40	RUM0E1900-N8C0	B826748/NEI
198.00	208.00	12.00	11.30	RUM0E1980-N8C0	B819779/NEI
200.00	220.00	14.50	13.30	RUM0E2000-N8C0	B866787/NEI
210.00	230.00	14.50	13.30	RUM0E2100-N8C0	B905826/NEI
210.00	240.00	22.50	21.00	RUM1E2100-N8C0	B944826/NEI
220.00	250.00	20.50	18.90	RUM0E2200-N8C0	B984866/NEI
230.00	260.00	20.50	19.00	RUM0E2300-N8C0	B1023905/NEI
500.00	540.00	35.00	32.80	RUM0E5000-N8C0	B21261968/NEI
530.00	570.00	25.00	23.00	RUM0E5300-N8C0	B22442086/NEI
640.00	680.00	25.00	23.00	RUM0E6400-N8C0	B26772519/NEI
702.00	752.40	30.00	27.50	RUM0E7020-N8C0	B29612764/NEI
760.00	820.00	35.00	32.00	RUM0E7600-N8C0	B32282992/NEI
785.00	845.00	35.00	32.00	RUM0E7850-N8C0	B33273090/NEI
845.00	905.00	35.00	32.00	RUM0E8450-N8C0	B35633327/NEI
921.00	981.00	35.00	32.00	RUM0E9210-N8C0	B38623626/NEI
1040.00	1110.00	35.00	32.00	RUM0X1040-N8C0	B43704094/NEI
1195.00	1265.00	35.00	32.00	RUM0X1195-N8C0	B49804705/NEI

Zurcon® L-Cup

Single-acting

Low Friction Properties

Material:
Zurcon®

Zurcon® L-Cup® *

Introduction

The rod sealing system is the most critical part of a hydraulic cylinder. Therefore it is expected that a rod sealing system performs under leak-free conditions in the static and dynamic state. Moreover it has to fulfil a lifetime of several thousand hours.

To meet these requirements, Trelleborg Sealing Solutions has developed the Zurcon® L-Cup® *, a highly effective and innovative rod sealing component.

DESCRIPTION

Zurcon® L-Cup® is a single-acting polyurethane rod seal with a unique design offering a hydrodynamic backpumping ability over the complete working pressure range. The pressure-independent, hydrodynamic sealing ability of this new sealing element requires no lubrication reservoir in the sealing area and ensures a constant and controlled pressure distribution over a wide pressure range.

The advantages of the Zurcon® L-Cup® design lead to the following improved properties:

ADVANTAGES

- Hydrodynamic back-pumping ability over the complete working pressure range
- Low friction and therefore a reduction of heat generated
- Low breakout force even after a long period of non-operation
- Very low stick-slip
- Low increase in friction at increasing pressure
- High extrusion resistance
- Optimum geometry of the static sealing lip for higher sealing ability
- No entrapped oil and grease between seal and groove (due to notches)
- No pressure build-up between seal and groove OD
- Long service life

The Zurcon® L-Cup® was designed in accordance with customers' demands.

- Groove dimensions according to ISO 5597 Part 2
- Interchangeable with existing U-Cup grooves
- Installation into closed grooves
- Wear and extrusion resistant high-performance polyurethane

APPLICATION EXAMPLES

Zurcon® L-Cup® can be used in all applications in which previously a conventional U-Cup was applied, such as:

- Fork lifts
- Agricultural machines
- Light and medium mobile hydraulics
- Industrial hydraulics
- Machine tools
- Injection molding machines
- Hydraulic presses

Another preferred solution for tandem rod sealing systems is the combination with the Turcon® Stepseal® 2K as primary seal and L-Cup® as secondary seal, in conjunction with a double acting scraper.

OPERATING CONDITIONS

Pressure:	Up to 40 MPa
Velocity:	Up to 0.5 m/s
Temperature:	-35 °C to +110 °C
Media:	Hydraulic fluids based on mineral oil

IMPORTANT NOTE

The above data are maximum values and cannot be used at the same time, e.g. the maximum operating speed depends on material type, pressure, temperature and gap value. Temperature range also depends on media.

*Patent for: Europe No. EP 0724693
*Patent for: US No. 5,649,711
*Patent for: China No. ZL 94193869.7
*Zurcon® L-Cup® is a trade name.

MATERIALS

Zurcon® Z20 Standard polyurethane 93 Shore A
Temperature: -35 °C to +110 °C
Color: turquoise

Zurcon® Z22 Premium polyurethane 93 Shore A
Temperature: -50 °C to +110 °C
Color: dark petrol

Zurcon® Z25 Premium polyurethane 93 Shore A
Temperature: -35 °C to +130 °C
Color: black

METHOD OF OPERATION

Trelleborg Sealing Solutions' experience in the production of hydrodynamic back-pumping seals such as Turcon® Stepseal® 2K, and the use of Finite Element Analysis (FEA) and other laboratory tests have led to the development of Zurcon® L-Cup® . The main objective in the development of this seal was the ability to achieve an optimum pressure distribution over the complete pressure range.

The pressure distribution curve under the sealing lip needs to have a steep gradient on the high-pressure side and a shallow gradient on the rear of the seal.

The operating principles and function of Zurcon® L-Cup® is similar to the well-known Turcon® Stepseal® 2K.

FRICTION

In Figure 42 the friction values of a conventional U-Cup and of Zurcon® L-Cup® are being compared. A high increase in friction of the U-Cup is clearly shown between approximately 5 and 15 MPa. This is due to the U-Cup being totally pressed on the rod surface at increased pressure, causing elimination of the oil reservoir and dry running of the U-Cup.

In comparison, the L-Cup® shows only a low increase in friction which is due to the smaller contact area and better tribological behaviour. The result is a low friction heat generation.

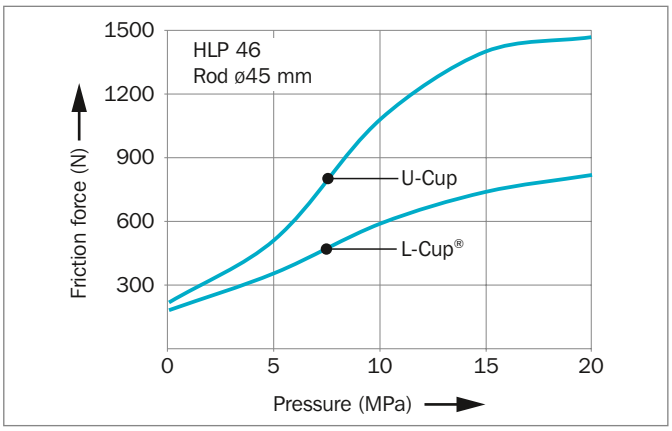

Figure 42: Friction dependent on pressure

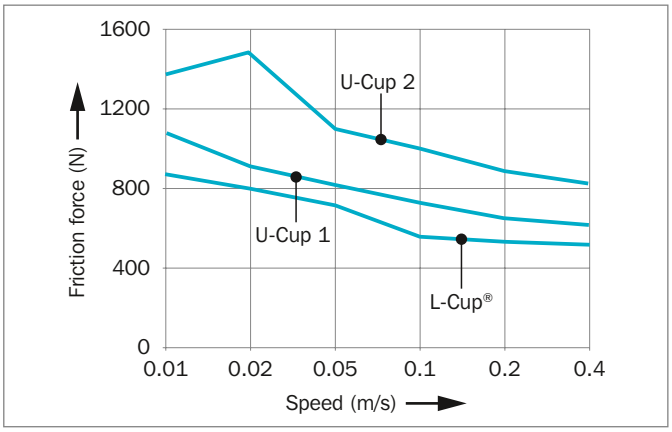

Figure 43: Friction dependent on speed

FRICTION HEAT

The effect described above can be made visible by simply measuring the temperature. Figure 44 shows the increase in temperature on the rod surface caused by friction, measured at a pressure of 40 MPa after 20,000 cycles. This explains the prolonged service life of L-Cup® .

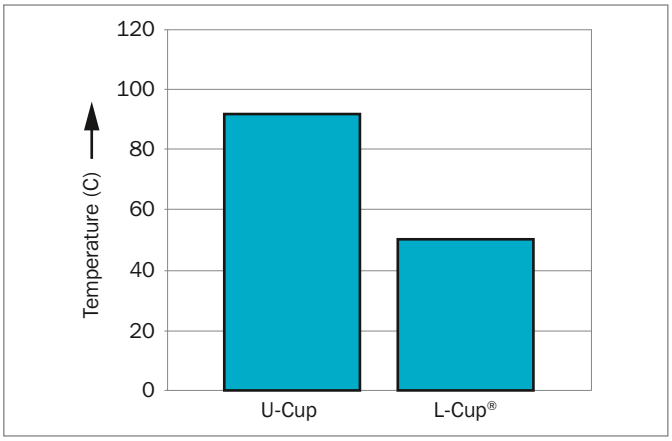

Figure 44: Increase in temperature caused by friction

TEST CONDITIONS (FIGURE 44)

Dimension:	50 x 60 x 11 mm
Pressure:	0/40 MPa
Velocity:	0.1 m/s
Temperature:	ambient

SEALING GAP

The recommended gap dimensions described in Figure 45, depend on pressure and temperature.

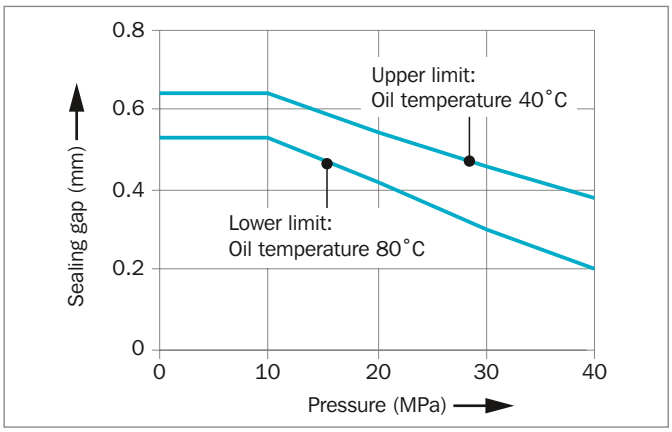

Figure 45: Sealing gap

DESIGN INSTRUCTIONS

Lead in chamfers
In order to avoid damage to the rod seal during installation, lead-in chamfers and rounded edges must be provided on the piston rods (Figure 46). If this is not possible for design reasons, a separate installation tool must be used.

The minimum length of the lead-in chamfer depends on the profile size of the seal and can be seen from the following tables.

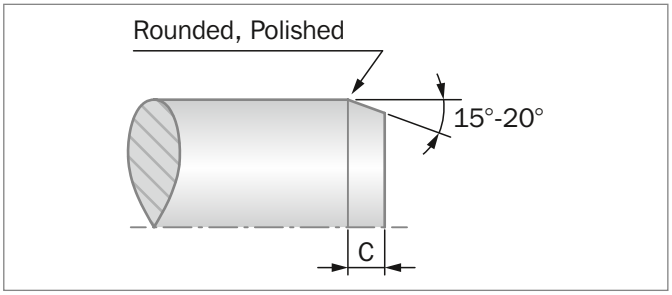

Figure 46: Lead-in chamfer

Table 35: Lead-in chamfers

Lead-in Chamfer Length C min.	Zurcon® L-Cup® Groove Depth*
2.0	3.5
2.0	4.0
2.5	5.0
4.0	7.5
5.0	10.0
6.5	12.5
7.5	15.0

* The groove depth is calculated from: $(D - d_N)/2$.
The dimensions for D and d_N can be found in Table 37.

Table 36: Material Selection

Material Code	Material Description	Temperature Range	Application
Zurcon® Z20	High performance Polyurethane 94 Shore A; standard grade for hydraulic	-35 °C to +110 °C	Excellent abrasion and extrusion resistance, minimal swelling in mineral oil, acceptable hydrolysis resistance.
Zurcon® Z22	High performance Polyurethane 93 Shore A; Premium grade for low temperature	-50 °C to +110 °C	Wide range of working temperatures with very good compression set performance at very low temperature. Excellent balance between swelling in mineral oil and hydrolysis resistance.
Zurcon® Z25	High performance Polyurethane 95 Shore A; Premium grade for high temperature	-35 °C to +130 °C	Wide range of working temperatures with excellent mechanical proprieties at high temperature.

Installation Recommendation

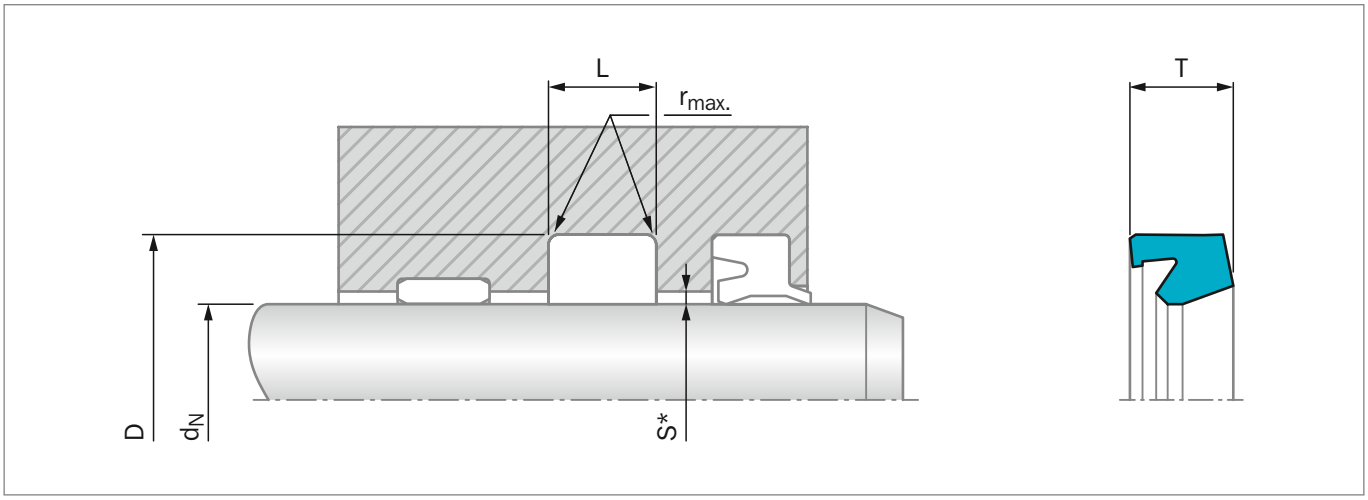

Figure 47: Installation Drawing

* Gap measure "S" see Figure 45

Table 37: Installation Dimensions / TSS Article No.

Rod Diameter	Groove Diameter	Groove Width	Radius	Ring Width	TSS Part No.
d_N f8	D H10	L +0.25	r max	T	
***10**	**18**	**6.3**	**0.3**	**5.7**	**RLS100100**
***12**	**20**	**6.3**	**0.3**	**5.7**	**RLS100120**
***14**	**22**	**6.3**	**0.3**	**5.7**	**RLS100140**
16	22	6.0	0.3	5.4	RL38N0160
***18**	**26**	**6.3**	**0.3**	**5.7**	**RLS100180**
20	26	5.5	0.3	5.0	RL04N0200
***20**	**28**	**6.3**	**0.3**	**5.7**	**RL08N0200**
***22**	**30**	**6.3**	**0.3**	**5.7**	**RL08N0220**
25	**33**	**8.0**	**0.3**	**7.2**	**RL10N0250**
25	**33**	**6.3**	**0.3**	**5.7**	**RL08N0250**
28	**36**	**6.3**	**0.5**	**5.7**	**RL08N0280**
***28**	**38**	**8.0**	**0.3**	**7.2**	**RL14N0280**
30	38	6.3	0.3	5.7	RL08N0300
30	40	8.0	0.3	7.2	RL14N0300
30	38	8.0	0.3	7.2	RL10N0300
30	40	11.0	0.3	9.9	RL17N0300
32	**42**	**8.0**	**0.3**	**7.2**	**RL14N0320**
35	43	6.3	0.3	5.7	RL08N0350
35	45	11.0	0.3	9.9	RL17N0350
36	**44**	**6.3**	**0.5**	**5.7**	**RL08N0360**
36	**46**	**8.0**	**0.3**	**7.2**	**RL14N0360**
36	46	10.0	0.3	9.0	RL16N0360
38	48	11.0	0.3	9.9	RL17N0380
40	48	7.0	0.3	6.3	RL09N0400

Rod Diameter	Groove Diameter	Groove Width	Radius	Ring Width	TSS Part No.
d_N f8	D H10	L +0.25	r max	T	
40	**50**	**8.0**	**0.3**	**7.2**	**RL14N0400**
40	50	10.0	0.3	9.0	RL16N0400
42	52	8.0	0.3	7.2	RL14N0420
42	52	10.0	0.3	9.0	RL16N0420
45	53	8.0	0.3	7.2	RL10N0450
45	**55**	**8.0**	**0.3**	**7.2**	**RL14N0450**
48	60	11.0	0.3	9.9	RL36N0480
50	58	9.0	0.3	8.1	RL11N0500
50	**60**	**8.0**	**0.3**	**7.2**	**RL14N0500**
50	60	10.0	0.3	9.0	RL16N0500
50	**65**	**12.5**	**0.4**	**11.3**	**RL26N0500**
55	63	9.0	0.3	8.1	RL11N0550
55	65	10.0	0.3	9.0	RL16N0550
***56**	**71**	**12.5**	**0.4**	**11.3**	**RL26N0560**
60	68	9.0	0.3	8.1	RL11N0600
60	70	8.0	0.3	7.2	RL14N0600
60	70	10.0	0.3	9.0	RL16N0600
63	**78**	**12.5**	**0.4**	**11.3**	**RL26N0630**
65	75	10.0	0.3	9.0	RL16N0650
70	80	10.0	0.3	9.0	RL16N0700
70	**85**	**12.5**	**0.4**	**11.3**	**RL26N0700**
75	90	12.5	0.3	11.3	RL26N0750
80	**95**	**12.5**	**0.4**	**11.3**	**RL26N0800**
85	100	13.1	0.4	11.8	RL27N0850
90	**105**	**12.5**	**0.4**	**11.3**	**RL26N0900**
100	**120**	**16.0**	**0.6**	**14.4**	**RL30N1000**
110	**130**	**16.0**	**0.6**	**14.4**	**RL30N1100**
115	135	16.0	0.6	14.4	RL30N1150
119	134	9.4	0.4	8.1	RL22N1190
120	135	12.5	0.4	11.3	RL26N1200
120	140	16.0	0.6	14.4	RL30N1200
125	140	12.0	0.4	10.8	RL25N1250
125	**145**	**16.0**	**0.6**	**14.4**	**RL30N1250**
130	150	16.0	0.6	14.4	RL30N1300
135	155	16.0	0.6	14.4	RL30N1350
140	**160**	**16.0**	**0.6**	**14.4**	**RL30N1400**
150	170	16.0	0.6	14.4	RL30N1500
155	175	16.0	0.6	14.4	RL30N1550
160	180	16.0	0.6	14.4	RL30N1600
195	220	20.0	0.6	18.0	RL32N1950

* Split groove
Dimensions and TSS Part Numbers in bold according to ISO 5597.

Zurcon® U-Cup RU2

Single-acting U-Cup

Asymmetric, Double Lip,
Compact

Material:
Zurcon®

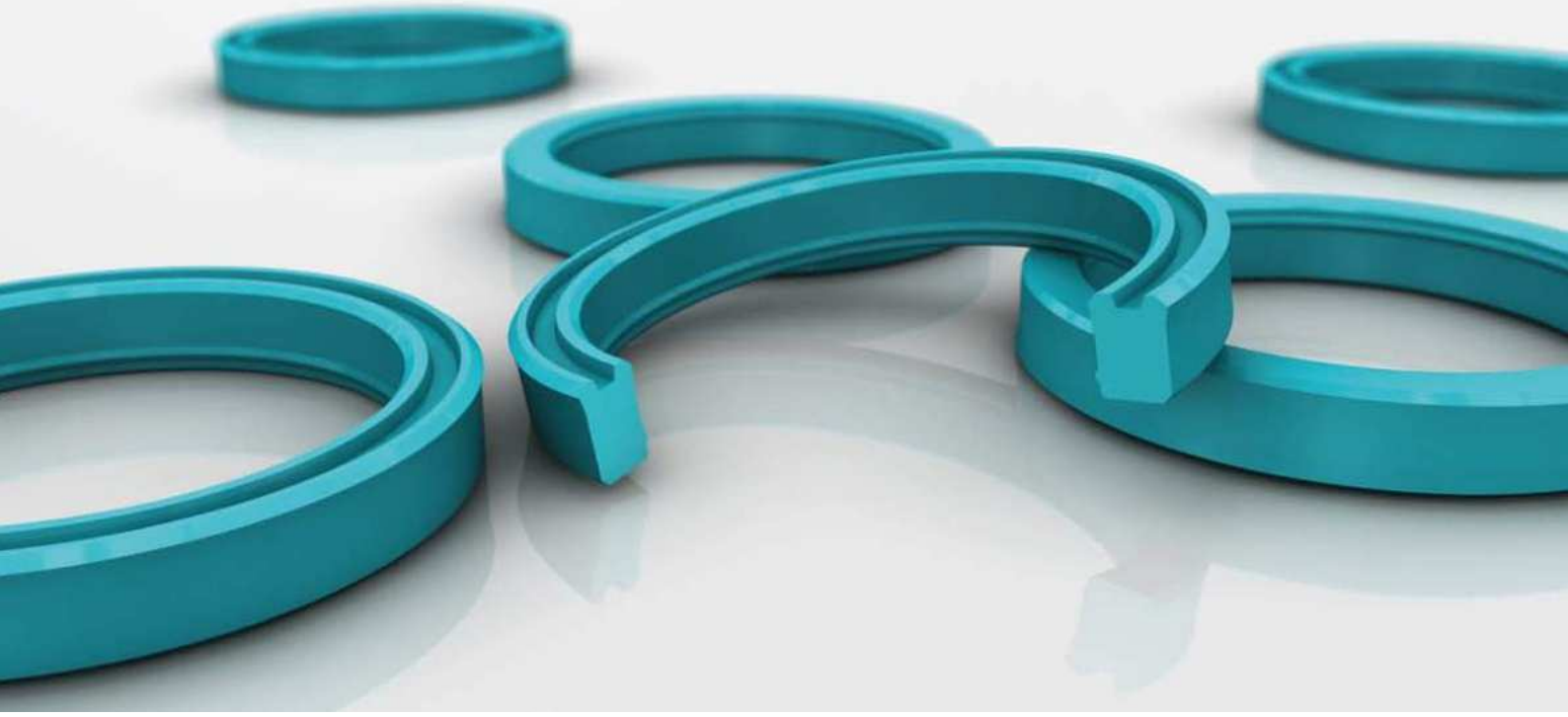

U-Cup RU2

Description

Today, U-Cups are used primarily as seals for piston rods in hydraulic cylinders. U-Cups in polyurethane are proven elements, due to their good mechanical properties, for standard cylinder construction, particularly for mobile hydraulics under rough operating conditions. The U-Cup RU2 is a double lip seal in a compact design.

TYPE RU2

The compact U-Cup type RU2 is designed for small grooves. It is thus particularly suitable for use in space-saving designs. The compact form provides a high sealing effect even with low system pressures.

The U-Cup has two sealing lips in the dynamic sealing zone. The compact form with two sealing lips provides an improvement in the leakage behavior at low system pressures. Due to the incorporation of an oil trap between the two sealing lips, friction at pressures above approximately 10 MPa is reduced. Furthermore, the second sealing lip prevents the entry of dirt from the atmosphere side.

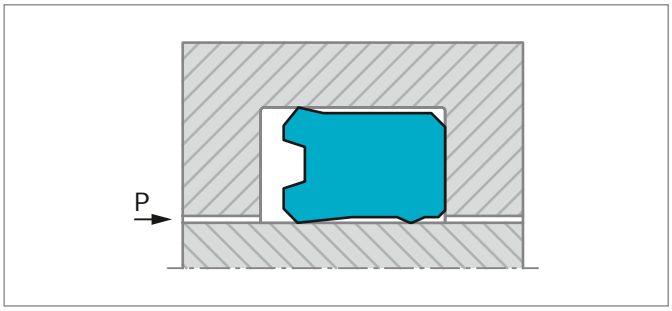

Figure 48: U-Cup, type RU2

METHOD OF OPERATION

The sealing effect of the U-Cup comes from the intrinsic preload of the seal body and from the compression of the seal lips during installation. In operating conditions, the radial mechanical contact forces are superimposed by the system pressure.

At low stroke speeds, U-Cups can tend to have a stick-slip effect due to an inadequate lubrication film formation in the seal clearance and to their material properties. This behavior corresponds to the Stribeck curve described in the relevant literature.

ADVANTAGES

- Good sealing effect at high and low pressures
- Good abrasion resistance, wear-resistant
- Unaffected by sudden loads
- Suitable for small grooves
- Simple installation

OPERATING CONDITIONS

Pressure:	Max. 35 MPa
Speed:	Up to 0.5 m/s
Temperature:	Use in mineral oils: -35 °C to +110 °C
Media:	Mineral oil-based hydraulic fluids.

IMPORTANT NOTE

The above data are maximum values and cannot be used at the same time, e.g. the maximum operating speed depends on material type, pressure, temperature and gap value. Temperature range also depends on media.

MATERIAL

Standard Zurcon® :	Z20
Special Polyurethane:	93 Shore A
Temperature:	-35 °C to +110 °C
Color:	turquoise

SEAL CLEARANCE

Guide values for the radial clearance between rod and gland in relation to the operating pressure and rod diameter can be found in the table below.

Table 38: Radial Clearance

Operating max. Pressure MPa	Radial Clearance S_{max}	
	d_N <60 mm	d_N >60mm
5	0.40	0.50
10	0.30	0.40
20	0.20	0.30
30	0.15	0.20
40	0.10	0.15

The values for S_{max} given in this table apply to all types for the low-pressure side of the U-Cup. They are designed for an operating temperature of 60 °C.

Table 39: Material Selection

Material Code	Material Description	Temperatur Range	Application
Zurcon® Z20	High performance Polyurethane 94 Shore A; standard grade for hydraulic	-35 °C to +110 °C -31 °F to +230 °F	Excellent abrasion and extrusion resistance, minimal swelling in mineral oil, acceptable hydrolysis resistance.
Zurcon® Z22	High performance Polyurethane 93 Shore A; Premium grade for low temperature	-50 °C to +110 °C -58 °F to +230 °F	Wide range of working temperatures with very good compression set performance at very low temperature. Excellent balance between swelling in mineral oil and hydrolysis resistance.

Installation Recommendation

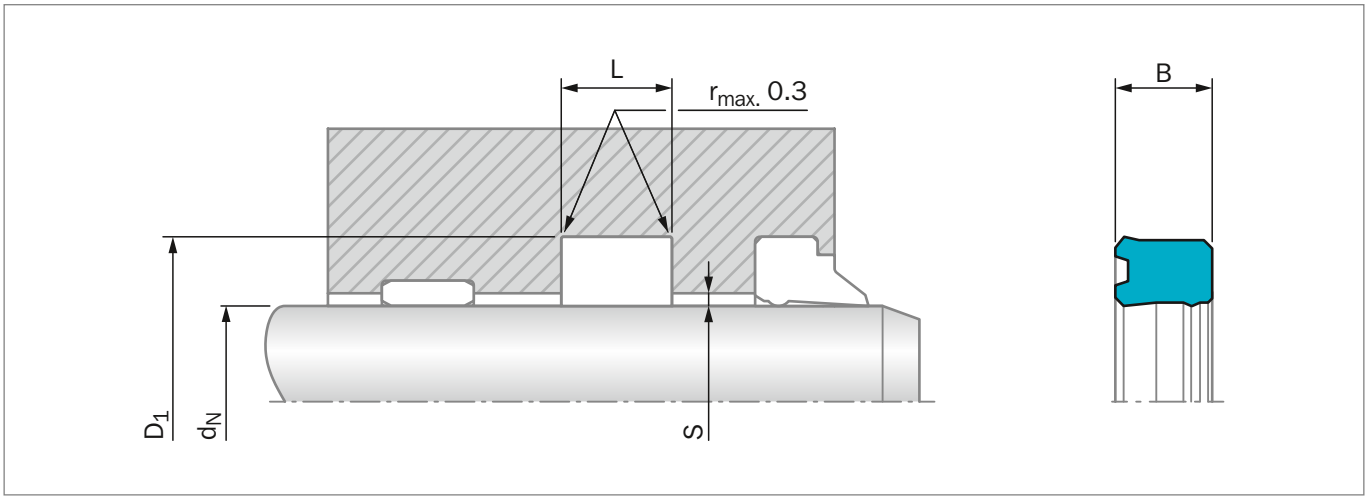

Figure 49: Installation Drawing
Dimensions "S" (see table on previous page)

ORDERING EXAMPLE

U-Cup Type RU2

Rod Diameter:	d_N = 45.0 mm
Groove Diameter:	D_1 = 55.0 mm
Groove Width:	L = 11.0 mm
TSS Part No.:	RU2200450 -

TSS Article No. **RU22 0 0450 - Z20**

TSS Series No.
Type (Standard)
Rod Diameter x 10
Quality Index (Standard)
Material Code

MATERIAL

Standard Zurcon® : Z20
Special Polyurethane: 93 Shore A
Color: turquoise

Table 40: Installation Dimensions / TSS Article No.

Rod Diameter	Groove Diameter	Groove Width	Seal Width	TSS Part No.
d_N f8/h9	D_1 H10	L +0.2	B	
*6.0	14.0	6.3	5.8	RU2000060
*8.0	16.0	6.3	5.8	RU2200080
*10.0	18.0	6.3	5.8	RU2000100
*12.0	20.0	6.3	5.8	RU2100120
*14.0	22.0	6.3	5.8	RU2100140
*16.0	24.0	6.3	5.8	RU2000160
*18.0	26.0	6.3	5.8	RU2100180
20.0	28.0	6.3	5.8	RU2100200

Rod Diameter	Groove Diameter	Groove Width	Seal Width	TSS Part No.
d_N f8/h9	D_1 H10	L +0.2	B	
***20.0**	**30.0**	**8.0**	**7.0**	**RU2300200**
22.0	**30.0**	**6.3**	**5.8**	**RU2300220**
24.0	32.0	6.3	5.7	RU2000240
25.0	**33.0**	**6.3**	**5.7**	**RU2000250**
***25.0**	**35.0**	**8.0**	**7.0**	**RU2400250**
*25.0	35.0	9.0	8.0	RU2500250
28.0	36.0	6.3	5.8	RU2000280
***28.0**	**38.0**	**6.3**	**5.8**	**RU2300280**
***28.0**	**38.0**	**8.0**	**7.0**	**RU2400280**
32.0	**42.0**	**8.0**	**7.0**	**RU2100320**
36.0	44.0	6.3	5.8	RU2000360
36.0	**46.0**	**8.0**	**7.3**	**RU2300360**
40.0	**50.0**	**8.0**	**7.0**	**RU2500400**
45.0	53.0	6.3	5.8	RU2000450
45.0	**55.0**	**6.3**	**5.7**	**RU2300450**
45.0	**55.0**	**8.0**	**7.0**	**RU2500450**
50.0	**60.0**	**8.0**	**7.0**	**RU2400500**
56.0	66.0	7.5	6.5	RU2100560
56.0	**71.0**	**12.5**	**11.5**	**RU2200560**
63.0	**78.0**	**12.5**	**11.5**	**RU2100630**
70.0	80.0	7.5	6.5	RU2200700
80.0	**95.0**	**12.5**	**11.5**	**RU2100800**
90.0	100.0	7.5	6.5	RU2000900
90.0	**105.0**	**12.5**	**11.4**	**RU2400900**
110.0	125.0	10.5	9.5	RU2001100
110.0	**130.0**	**16.0**	**15.0**	**RU2101100**
140.0	**160.0**	**16.0**	**15.0**	**RU2201400**

Dimensions and TSS Part Numbers in bold according to ISO 5597. * Split groove
Additional dimensions can be delivered on request.

Zurcon® U-Cup RU6

Single-acting U-Cup

Rubber Energized

Material:
Zurcon® + NBR

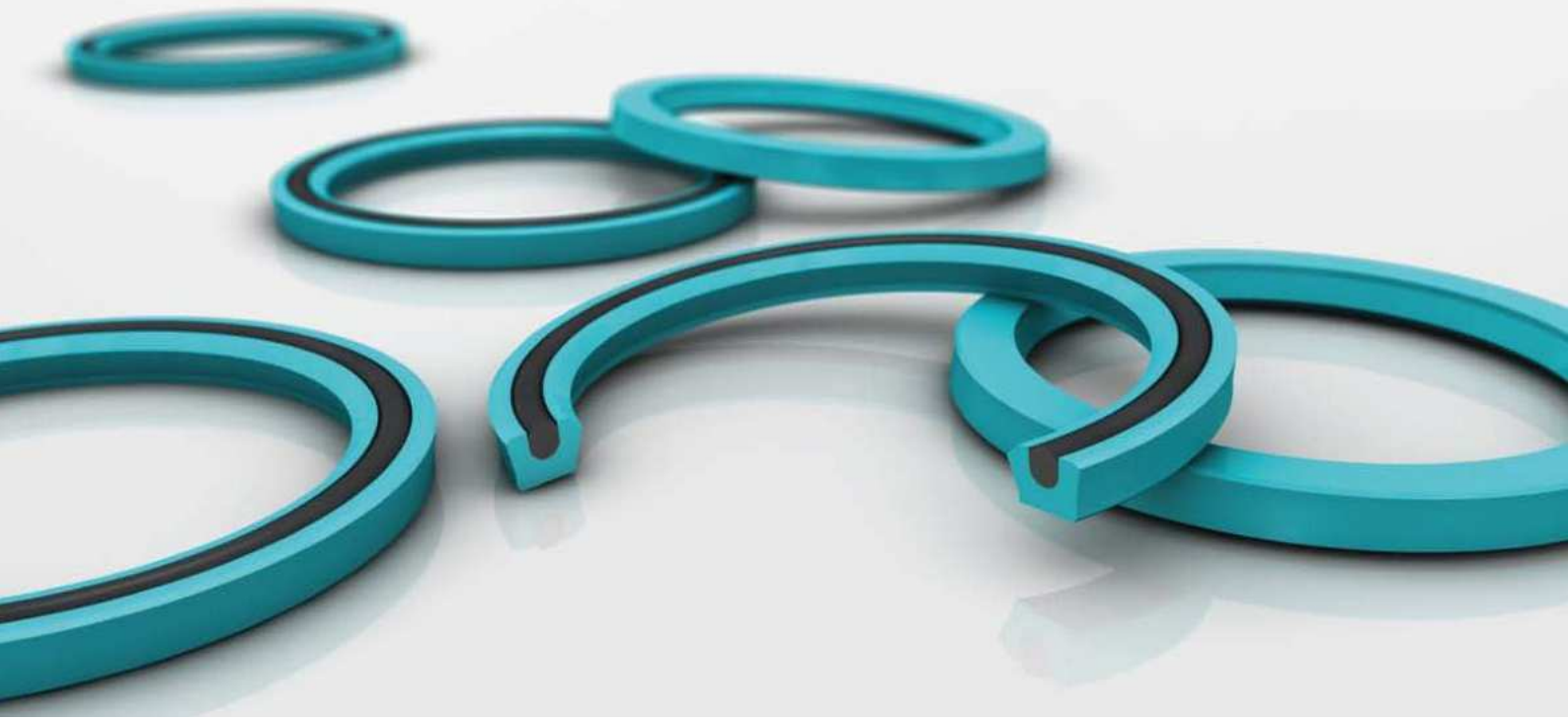

U-Cup RU6

Description

Additional to the machined seals Stepseal® 2K and Rimseal for housings to ISO 7425/2 (rubber energised plastic seals) the U-Cup type RU6 has been developped as an injection molded seal of polyurethane material to fit in the same ISO housings. The integrated NBR O-Ring (only available for series RU62 - RU64) improves the performance at low pressure and low temperature applications. Polyurethan (Zurcon® Z20) is a proven material for U-cups due to their good mechanical properties.

TYPE RU6

The U-Cup type RU6 can be installed as a single seal for low to medium duty applications; for sealing systems, the U-Cup RU6 shall be installed mainly as a secondary seal together with the Turcon® Stepseal® 2K as primary seals.

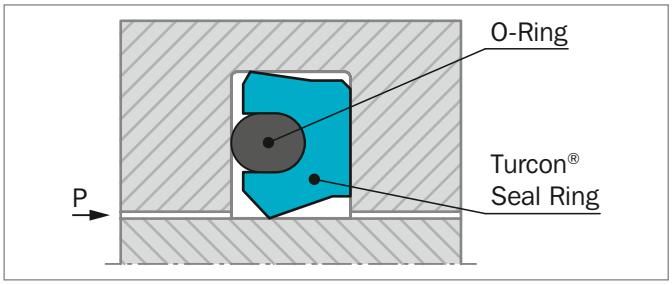

Figure 50: U-Cup, type RU6

METHOD OF OPERATION

The sealing effect of the U-Cup RU6 comes from the intrinsive preload of the seal body and from the compression of the seal lip and the O-Ring during installation. In operation conditions, the radial contact forces are superimposed by the system pressure.

Due to the special design and the integrated O-Ring the RU6 U-Cups have an excellent sealing behavior with and without pressure activation. The short sealing lip gives better friction values compared to common U-Cups.

ADVANTAGES

- Very good low pressure sealability
- Simple installation
- Lower friction compared with common U-Cups
- Installation in ISO 7475/2 grooves
- Very low compression set due to O-Ring

APPLICATION EXAMPLES

- General hydraulic cylinders
- Injection molding machines
- Lift trucks
- Agricultural machines

OPERATING CONDITIONS

Pressure:	Max. 25 MPa (as single element)
Speed:	Up to 0.5 m/s
Temperature:	Use in mineral oils: -35 °C to +110 °C
Media:	Mineral oil-based hydraulic fluids.

IMPORTANT NOTE

The above data are maximum values and cannot be used at the same time, e.g. the maximum operating speed depends on material type, pressure, temperature and gap value. Temperature range also depends on media.

CLEARANCE

Table 41: Radial Clearance U-Cup RU6

Operating Pressure MPa max.	Radial Clearance S_{max}
16	0.60
25	0.50

The values for S_{max} given in this table apply to all types for the low-pressure side of the U-Cup. They are designed for an operating temperature of 60 °C. (for harsh conditions and high side loads the gap must be reduced by 50%)

MATERIAL

The thermoplastic polyurethane material Zurcon® Z20 has a high abrasion resistance, a low compression set and exhibits a high resistance to clearance extrusion. The integrated O-Ring is an NBR with 70 shore A and a very low compression set.

U-Cup:	polyurethane 93 shore A material code Z20
O-Ring:	NBR 70 Shore A material code N
Set code:	Z20N

Table 42: Materials

Material Code	Material Description	Temp. Range	Application
Zurcon® Z20	High performance Polyurethane 94 Shore A; standard grade for hydraulic	-35 °C to +110 °C -31 °F to +230 °F	Excellent abrasion and extrusion resistance, minimal swelling in mineral oil, acceptable hydrolysis resistance.

Installation Recommendation

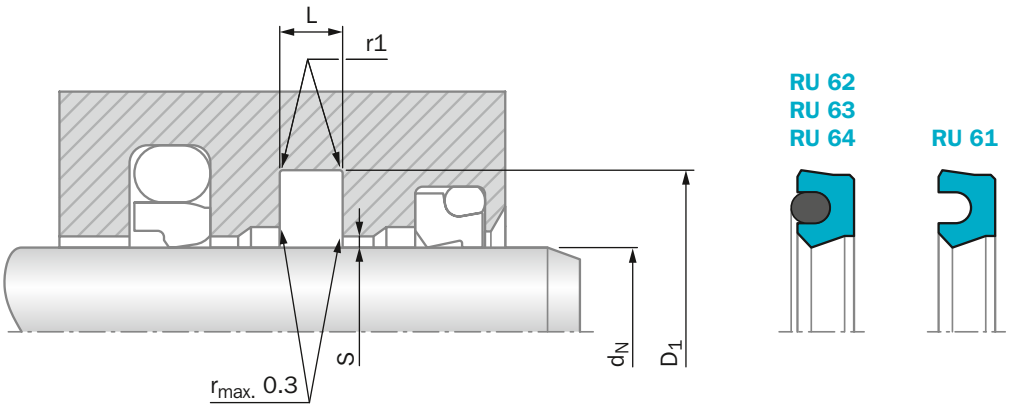

Figure 51: Installation Drawing

ORDERING EXAMPLE

U-Cup Type RU6

Rod Diameter:	d_N = 25.0 mm
Groove Diameter:	D1 = 36.0 mm
Groove Width:	L = 4.2 mm
TSS Part No.:	RU6200250 -
Compound code seal:	Z20 turquoise
Compound code O-Ring:	N
Material set code:	Z20N

TSS Article No. RU62 0 0250 - Z20N

- TSS Series No.
- Type (Standard)
- Rod Diameter x 10
- Quality Index (Standard)
- Material Set Code

Table 43: Installation Dimensions / TSS Part No.

Rod Diameter	Groove Diameter	Groove Width	Radius	TSS Part No.	O-Ring Size
d_N f8/h9	D_1 H10	L +0.2	r1		
12.0	19.5	3.2	0.5	RU6100120	-
14.0	21.5	3.2	0.5	RU6100140	-
16.0	23.5	3.2	0.5	RU6100160	-
18.0	25.5	3.2	0.5	RU6100180	-
20.0	27.5	3.2	0.5	RU6100200	-
22.0	29.5	3.2	0.5	RU6100220	-
25.0	32.5	3.2	0.5	RU6100250	-
*28.0	39.0	4.2	0.5	RU6200280	31.42 x 2.62
*32.0	43.0	4.2	0.5	RU6200320	36.17 x 2.62
36.0	47.0	4.2	0.5	RU6200360	39.34 x 2.62
*40.0	51.0	4.2	0.5	RU6200400	44.12 x 2.62
*45.0	56.0	4.2	0.5	RU6200450	48.90 x 2.62

Rod Diameter	Groove Diameter	Groove Width	Radius	TSS Part No.	O-Ring Size
d_N f8/h9	D_1 H10	L +0.2	r1		
50.0	**61.0**	**4.2**	**0.5**	**RU6200500**	**53.64 x 2.62**
55.0	66.0	4.2	0.5	RU6200550	58.42 x 2.62
56.0	**67.0**	**4.2**	**0.5**	**RU6200560**	**59.99 x 2.62**
56.0	**71.5**	**6.3**	**0.9**	**RU6300560**	**59.92 x 3.53**
63.0	**74.0**	**4.2**	**0.5**	**RU6200630**	**66.34 x 2.62**
63.0	**78.5**	**6.3**	**0.9**	**RU6300630**	**66.27 x 3.53**
65.0	80.5	6.3	0.9	RU6300650	69.44 x 3.53
70.0	**85.5**	**6.3**	**0.9**	**RU6300700**	**75.79 x 3.53**
75.0	90.5	6.3	0.9	RU6300750	82.14 x 3.53
80.0	**95.5**	**6.3**	**0.9**	**RU6300800**	**85.32 x 3.53**
90.0	**105.5**	**6.3**	**0.9**	**RU6300900**	**94.84 x 3.53**
100.0	**115.5**	**6.3**	**0.9**	**RU6301000**	**104.37 x 3.53**
110.0	**125.5**	**6.3**	**0.9**	**RU6301100**	**113.89 x 3.53**
120.0	135.5	6.3	0.9	RU6301200	126.59 x 3.53
130.0	145.5	6.3	0.9	RU6301300	136.12 x 3.53
140.0	**155.5**	**6.3**	**0.9**	**RU6301400**	**145.64 x 3.53**
150.0	165.5	6.3	0.9	RU6301500	158.34 x 3.53
160.0	**175.5**	**6.3**	**0.9**	**RU6301600**	**164.69 x 3.53**
180.0	**195.5**	**6.3**	**0.9**	**RU6301800**	**183.74 x 3.53**
190.0	205.5	6.3	0.9	RU6301900	196.44 x 3.53
200.0	**221.0**	**8.1**	**0.9**	**RU6402000**	**208.92 x 5.33**
210.0	231.0	8.1	0.9	RU6402100	221.62 x 5.33
260.0	281.0	8.1	0.9	RU6402600	266.07 x 5.33
300.0	321.0	8.1	0.9	RU6403000	329.57 x 5.33
350.0	371.0	8.1	0.9	RU6403500	354.97 x 5.33

Dimensions in **bold** according to ISO/DIN 7425/2. Is also suitable for Stepseal® groove. * Split groove

Zurcon® U-Cup RU9

Single-acting U-Cup

New U-Cup Design

Material:
Zurcon®

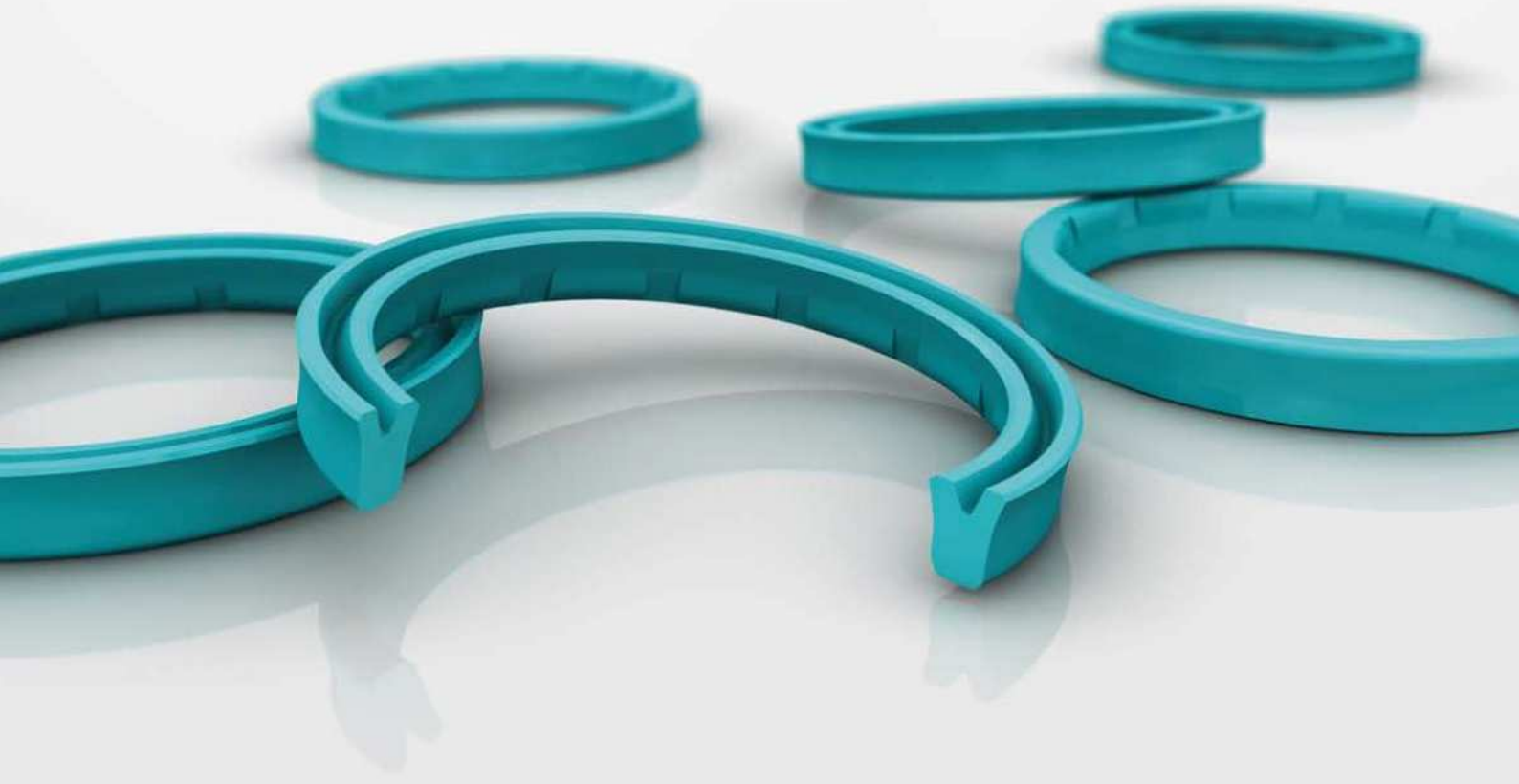

U-Cup RU9

Introduction

Rod seals are particularly exposed to pressure and friction. A long service life is a specific requirement of piston rods. Features such as wear and extrusion resistance, media and temperature compatibility, low friction, compact Installation Dimensions and ease of assembly are also essential and require the introduction of new products and materials. It is against this background that we have developed the Zurcon® U-Cup RU9.

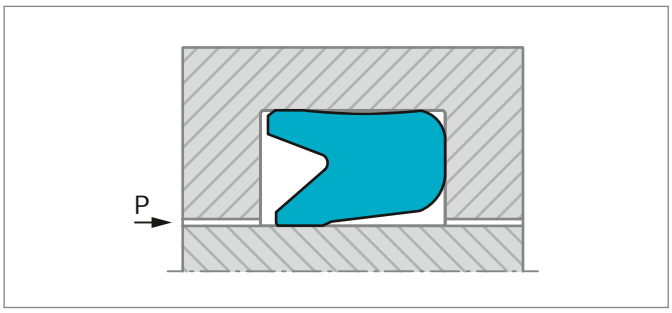

Figure 52: U-Cup, type RU9

DESCRIPTION

Due to its special design, behind the dynamic seal lip, the Zurcon® U-Cup RU9 with its structure of slide segments interspersed by back-pumping channels features excellent back-pumping ability across the entire pressure range. The dynamic seal slide segments also have a micro-structure with excellent tribological and sealing characteristics. As well as increasing the sealing ability of the U-Cup RU9, this also ensures a constant lubrication film underneath the seal sliding surface, reducing breakaway force even after prolonged periods of rest and reduces dynamic friction force.

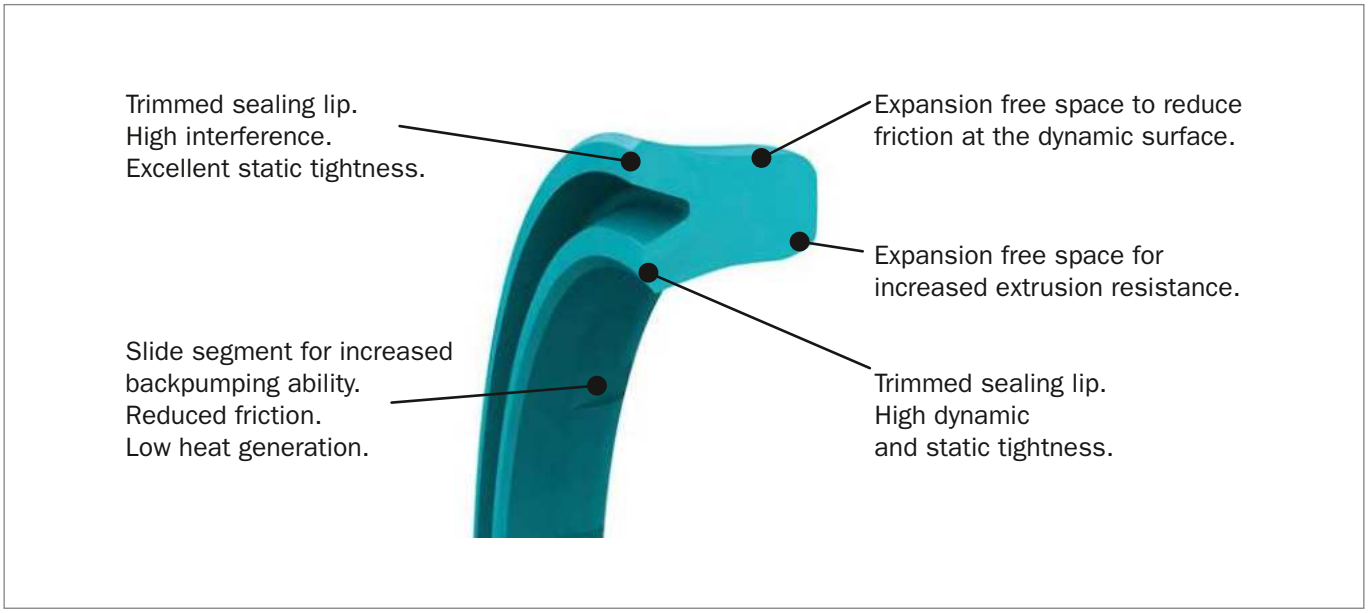

Figure 53: Zurcon® U-Cup RU9 design features

FRICTION

The friction force of U-Cups dramatically increases between 2.5 and 10 MPa. The Zurcon® U-Cup RU9 has a unique feature. As the system pressure increases, the contact surface between the U-Cup and the piston rod increases. Once a specific system pressure is reached, the seal deforms to such an extent that its entire friction-generating inside surface gets in contact with the piston rod. Due to the special design of Zurcon® U-Cup RU9 there is improved pressure distribution on the rod. The resulting tribological benefits restrict the increase in friction. When we compare the friction values of conventional U-Cups with those of the Zurcon® U-Cup RU9 the results are self-evident.

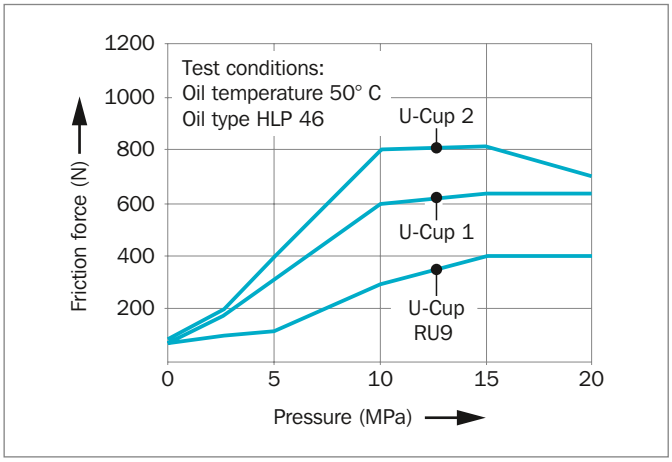

Figure 54: Friction dependent on pressure

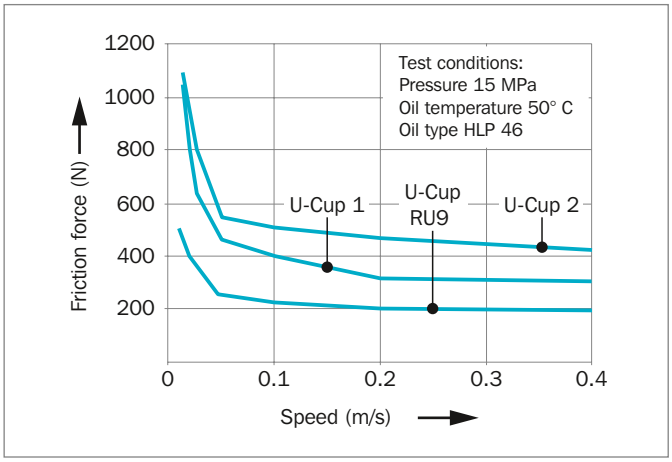

Figure 55: Friction dependent on speed

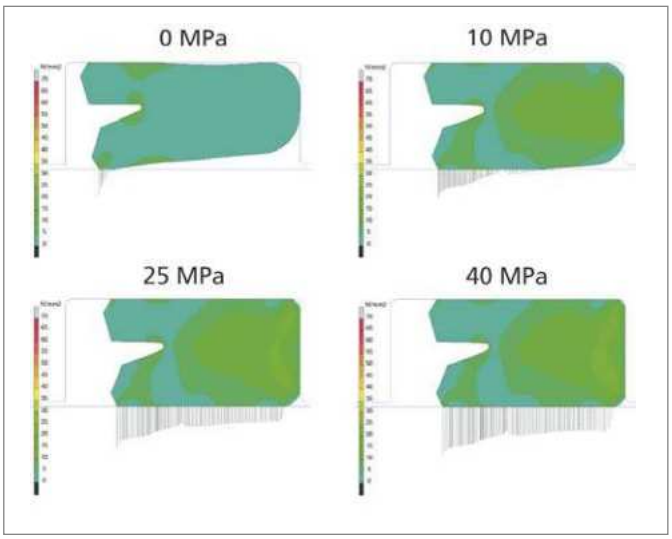

Figure 56: How the Zurcon® U-Cup RU9 performs underpressure

SEALING PERFORMANCE

The high sealing performance is achieved by:

- Interference fit at the external diameter
- Special shape of both trimmed seal lips
- Controlled pressure distribution and hydrodynamic backpumping ability over a wide pressure range

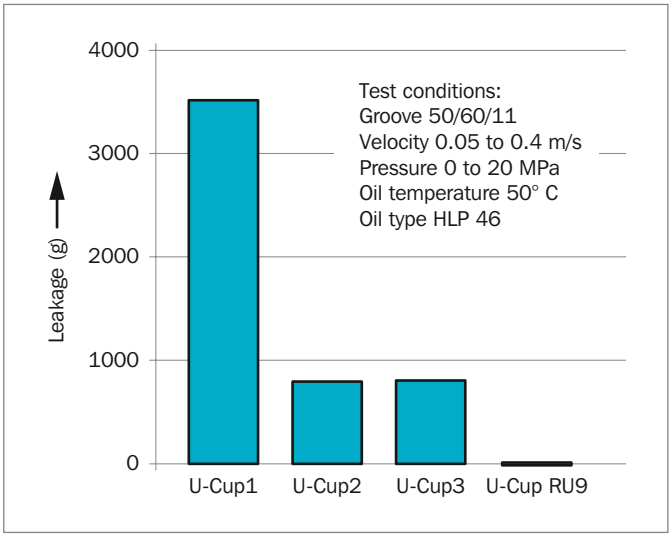

Figure 57: Leakage performance dependent on U-Cup type

RADIAL CLEARANCE

The new Zurcon® RU9 design combined with the special compound properties shows a better extrusion resistance compared to standard U-Cup under all working conditions. The hardware clearance can be increased significantly.

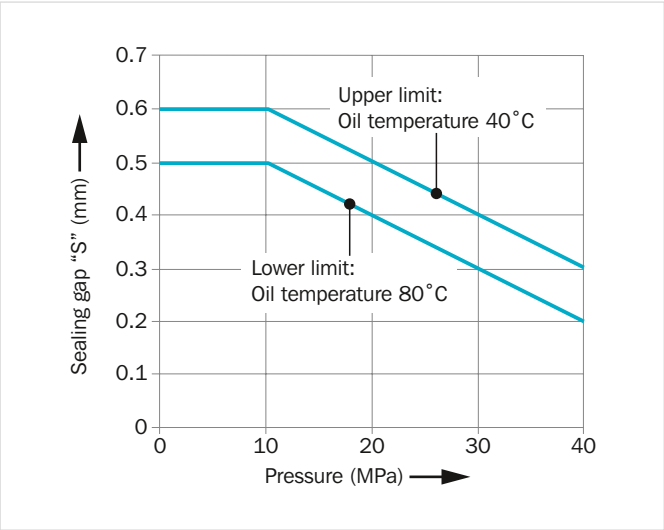

Figure 58: Radial clearance "S" as function of pressure

ADVANTAGES

- Lower friction than standard U-Cups
- Lower heat generation than standard U-Cups
- High extrusion resistance
- Excellent dynamic and static sealing
- Optimum environment protection
- Back pumping ability over the entire pressure range achieved by grooved profile
- Suitable with the Zurcon® Buffer Seal as secondary seal in "tandem design"
- Suitable for sealing systems with double scraper
- Seal stability within the groove

APPLICATION EXAMPLES

Zurcon® U-Cup RU9 can be used in all applications in whichpreviously a conventional U-Cup was applied, such as:

- Hydraulic cylinders
- Construction machinery
- Fork lifts
- Truck cranes
- Telescopic cylinders
- Agricultural machines
- Machine tools
- Injection molding machines
- Hydraulic presses
- Gas spring

In medium/heavy duty applications the preferred solution for tandem rod sealing systems is the combination with the Zurcon® Buffer Seal primary seal and Zurcon® U-Cup RU9 in conjunction with a double acting scraper.

MATERIALS

Zurcon® Z20 Standard polyurethane 93 Shore A
Temperature: -35 °C to +110 °C
Color: Turquoise

Zurcon® Z22 Premium polyurethane 93 Shore A
Temperature: -50 °C to +110 °C
Color: Dark petrol

Zurcon® Z25 Premium polyurethane 93 Shore A
Temperature: -35 °C to +130 °C
Color: Black

The Zurcon® polyurethane has high abrasion resistance, a low compression set, high extrusion resistance and a wide temperature range.

OPERATING CONDITIONS

Pressure:	Up to 40 MPa
Velocity:	Up to 0.5 m/s
Temperature: Zurcon® Z20 Standard:	-35 °C to +110 °C
Media: Hydraulic fluids based on mineral oil:	-35 °C to +110 °C
Synthetic and natural ester HEES, HETG:	Up to +60 °C
Flame-retardant hydraulic fluids HFA/HFB:	Up to +40 °C

IMPORTANT NOTE

The above stated limits for pressure and speed are maximum values individually. Friction heat generated by the combination of pressure and speed may cause local heat built-up. Care should be taken not to apply high values for pressure and speed at the same time.

Table 44: Materials

Material Code	Material Description	Temperature Range	Application
Zurcon® Z20	High performance Polyurethane 94 Shore A; standard grade for hydraulic	-35 °C to +110 °C -31 °F to +230 °F	Excellent abrasion and extrusion resistance, minimal swelling in mineral oil, acceptable hydrolysis resistance.
Zurcon® Z22	High performance Polyurethane 93 Shore A; Premium grade for low temperature	-50 °C to +110 °C -58 °F to +230 °F	Wide range of working temperatures with very good compression set performance at very low temperature. Excellent balance between swelling in mineral oil and hydrolysis resistance.
Zurcon® Z25	High performance Polyurethane 95 Shore A; Premium grade for high temperature	-35 °C to +130 °C -31 °F to +270 °F	Wide range of working temperatures with excellent mechanical proprieties at high temperature. Products: Ideal for use in heavy duty cylinder and cylinders exposed to high-temperature painting processes.

Installation Recommendation

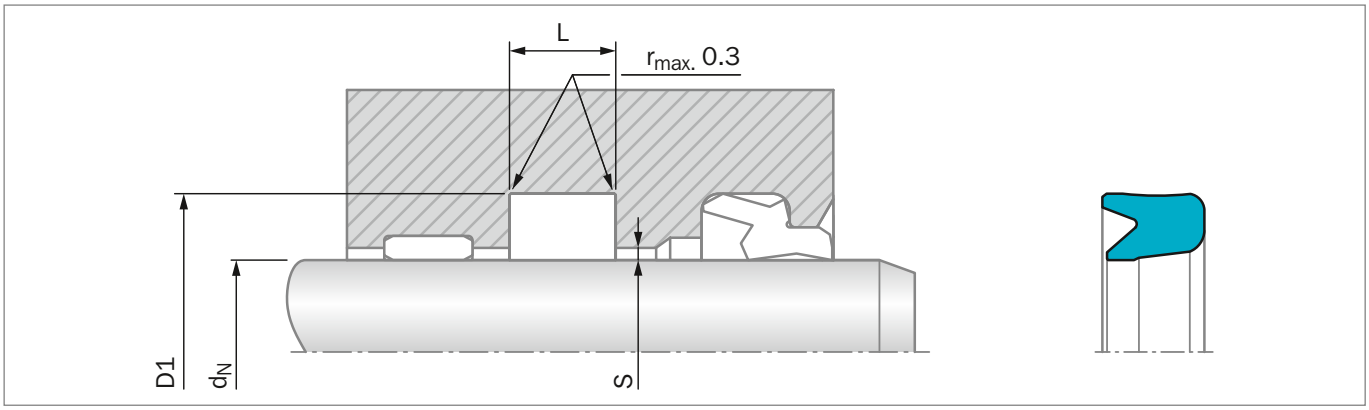

Figure 59: Installation Drawing, Dimension "S" see Figure 58

ORDERING EXAMPLE (METRIC)

Zurcon® U-Cup Type RU9

Rod Diameter:	d_N = 20.0 mm
Groove Diameter:	D1 = 28.0 mm
Groove Width:	L = 6.3 mm
TSS Part No.:	RU9000200 -

TSS Article No. RU90 0 0200 - Z20

- TSS Series No.
- Type (Standard)
- Rod Diameter x 10
- Quality Index (Standard)
- Material Code

MATERIAL

Standard Zurcon® :	Z20
Special polyurethane:	93 Shore A
Color:	Turquoise

Table 45: Preferred Series / TSS Article No.

Rod Diameter	Groove Diameter	Groove Width	TSS Part No.
d_N f8/h9	D1 H10	L +0.25	
*6.0	14.0	6.3	RU9000060
***8.0**	**16.0**	**6.3**	**RU9000080**
12.0	19.0	6.0	RU9000120
15.0	20.0	5.0	RU9000150
*15.0	23.0	6.3	RU9100150
*16.0	22.0	6.0	RU9200160
*16.0	24.0	6.0	RU9100160
***16.0**	**24.0**	**6.3**	**RU9000160**
18.0	25.0	5.3	RU9100180
***18.0**	**26.0**	**6.3**	**RU9000180**
20.0	26.0	6.0	RU9100200
***22.0**	**32.0**	**8.0**	**RU9100220**

Rod Diameter	Groove Diameter	Groove Width	TSS Part No.
d_N f8/h9	D1 H10	L +0.25	
15.0	20.0	5.0	RU9000150
15.0	23.0	6.3	RU9100150
16.0	24.0	6.0	RU9200160
16.0	22.0	6.0	RU9100160
18.0	25.0	5.3	RU9100180
20.0	26.0	6.0	RU9100200
***20.0**	**28.0**	**5.0**	**RU9300200**
***20.0**	**30.0**	**8.0**	**RU9200200**
20	**28**	**6.3**	RU9000200
22	**30**	**6.3**	RU9000220
*22.0	29.0	5.6	RU9200220
*25.0	31.0	6.3	RU9100250
25.0	**33.0**	**6.3**	**RU9000250**
28.0	**36.0**	**6.3**	**RU9000280**
***28.0**	**38.0**	**8.0**	**RU9100280**
*30.0	38.0	9.0	RU9100300
*30.0	40.0	7.5	RU9200300
30.0	40.0	11.0	RU9100300
*32.0	40.0	6.3	RU9200320
*32.0	40.0	9.0	RU9100320
32.0	**42.0**	**8.0**	**RU9000320**
*35.0	42.0	8.0	RU9100350
35.0	**45.0**	**8.0**	**RU9000350**
36.0	**44.0**	**6.3**	**RU9100360**
36.0	44.0	9.0	RU9000360
36.0	**46.0**	**8.0**	**RU9200360**
40.0	**50.0**	**8.0**	**RU9000400**
*45.0	53.0	8.5	RU9200450
45.0	53.0	8.5	RU9200450
45.0	**55.0**	**6.3**	**RU9100450**
45.0	**55.0**	**8.0**	**RU9000450**
50.0	**60.0**	**8.0**	**RU9000500**
50.0	**65.0**	**12.5**	**RU9100500**
50.0	60.0	11.0	RU9200500
55.0	65.0	8.0	RU9000550
*56.0	68.0	11.0	RU9100560
56.0	**71.0**	**12.5**	**RU9000560**
60.0	68.0	7.0	RU9100600
*60.0	70.0	8.0	RU9200600
60.0	70.0	8.0	RU9200600
60.0	**75.0**	**12.5**	**RU9000600-Z2**
*63.0	75.0	13.0	RU9100630

Rod Diameter	Groove Diameter	Groove Width	TSS Part No.
d_N f8/h9	D1 H10	L +0.25	
63.0	75.0	13.0	RU9100630
63.0	**78.0**	**12.5**	**RU9000630**
65.0	75.0	8.0	RU9000650
*65.0	85.0	12.5	RU9100650
65.0	85.0	12.5	RU9100650
*70.00	82.0	9.6	RU9200700
70.0	82.0	9.6	RU9200700
70.0	**85.0**	**12.5**	**RU9000700**
75.0	83.0	7.0	RU9000750
*80.0	93.0	12.5	RU9300800
80.0	93.0	12.5	RU9300800
80.0	95.0	10.0	RU9200800
*80.0	95.0	10.0	RU9200800
80.0	**95.0**	**12.5**	**RU9100800**
*80.0	100.0	12.5	RU9000800
80.0	100.0	12.5	RU9000800
*85.0	100.0	10.0	RU9200850
85.0	100.0	10.0	RU9200850
*85.0	100.0	12.5	RU9100850
85.0	100.0	12.5	RU9100850
90.0	100.0	7.5	RU9100900
*90.0	102.0	9.6	RU9200900
90.0	102.0	9.6	RU9200900
90.0	**105.0**	**12.5**	**RU9000900**
*95.0	110.0	10.0	RU9200950
*95.0	110.0	12.5	RU9100950
95.0	110.0	12.5	RU9100950
95.0	115.0	13.0	RU9000950
*100.0	108.0	12.0	RU9101000
100.0	108.0	12.0	RU9101000
*100.0	115.0	13.0	RU9201000
100.0	115.0	13.0	RU9201000
100.0	**120.0**	**16.0**	**RU9001000**
105.0	120.0	12.5	RU9001050
110.0	120.0	11.0	RU9101100
*110.0	125.0	12.0	RU9301100
110.0	125.0	12.0	RU9301100
110.0	125.0	12.5	RU9201100
110.0	125.0	12.5	RU9201100
110.0	**130.0**	**16.0**	**RU9001100**
115.0	125.0	11.0	RU9001150

Rod Diameter	Groove Diameter	Groove Width	TSS Part No.
d_N f8/h9	D1 H10	L +0.25	
120.0	135.0	12.5	RU9001200
125.0	**145.0**	**16.0**	**RU9001250**
130.0	140.0	7.5	RU9001300
130.0	140.0	7.5	RU9001300
130.0	145.0	13.0	RU9101300
130.0	145.0	13.0	RU9101300
140.0	**160.0**	**16.0**	**RU9001400**

* splitted groove
Dimensions and TSS Part Numbers in bold according to ISO 5597.

Zurcon® Buffer Seal

Single-acting U-Cup

With integrated Back-Up Ring

Material:
Zurcon®

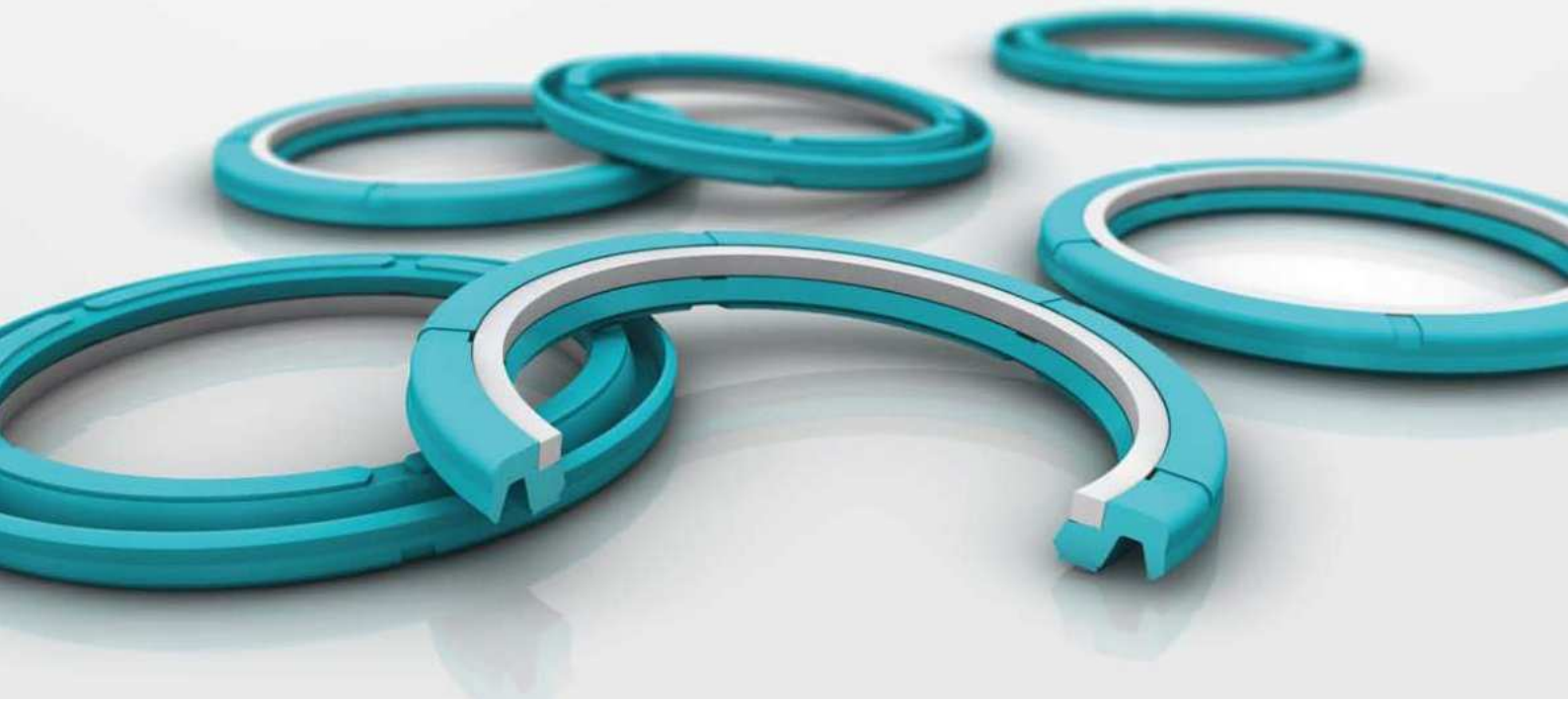

Zurcon® Buffer Seal

Introduction

In heavy duty applications, leak free performance and high service life cannot be assured by a single sealing element; therefore, specially developed "system seals" are arranged in series, building a "tandem configuration".

Each sealing element in a system has its specific function and their interaction needs to be secured to get a redundant sealing system. The primary seal in Zurcon® material has an excellent wear and extrusion resistance under extreme working conditions. It allows a fine lubrication film passing this first barrier, ensuring the necessary lubrication of the secondary sealing element for long service life.

The ”tandem arrangement” requires an outstanding backpumping ability of the primary seal and the secondary seal, if a double acting scraper is installed.

By utilizing two materials, the performance of the product is enhanced and life is extended. The Zurcon® Buffer Seal is designed in such a way that sealing performance is not compromised under system pressure extremes. At low system pressure, the resilience of the Zurcon® material allows for effective sealing. At high system pressure, the Back-up ring is designed to contract into the extrusion gap, protecting the Zurcon® Seal ring.

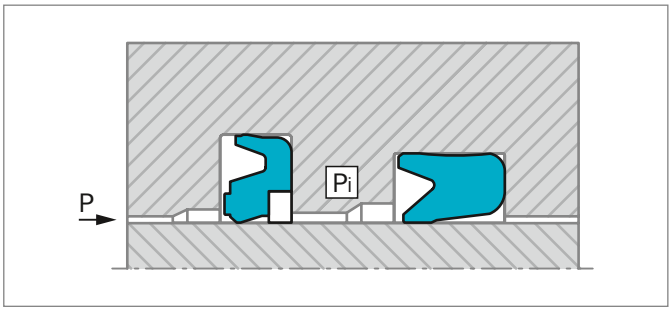

Figure 60: Tandem configuration

DESCRIPTION

The single-acting Zurcon® Buffer Seal is designed as a heavy duty primary rod seal. The design of the product incorporates a combination of a Zurcon® sealing ring long with a Back-up ring.

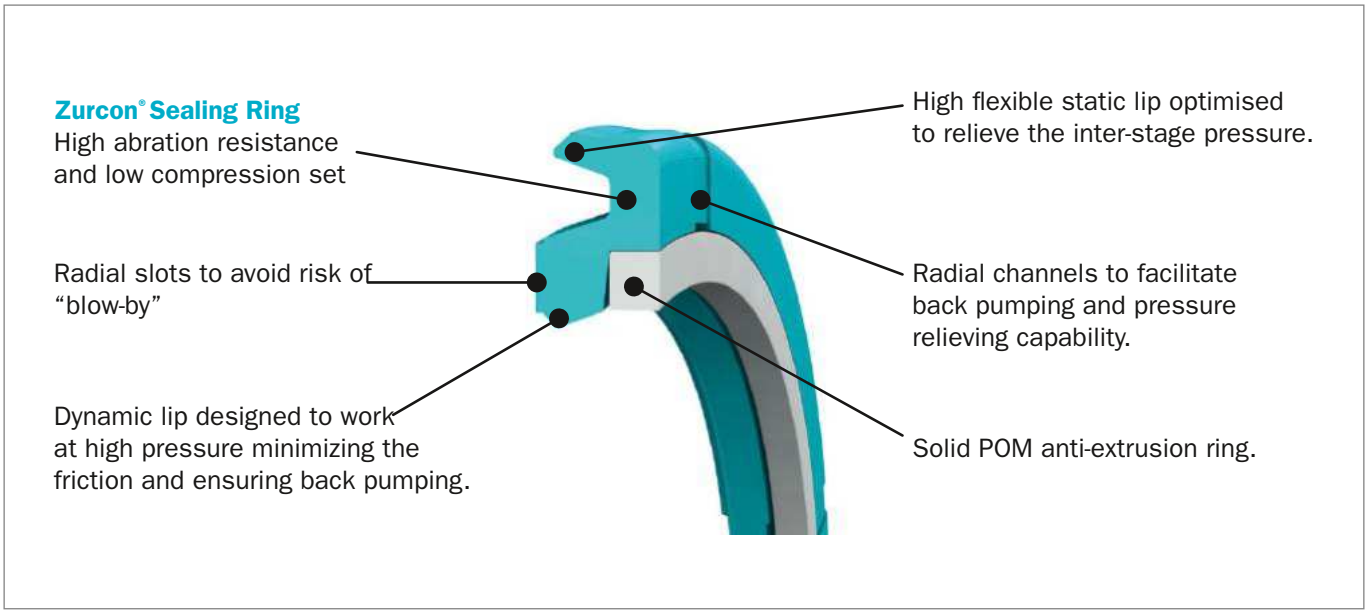

Figure 61: Zurcon® Buffer Seal design features

FRICTION

The Zurcon® Buffer Seal with its special U shape and its rounded dynamic lip is able to guarantee an optimal pressure distribution and a constant lubrication of the rod across the entire pressure range.

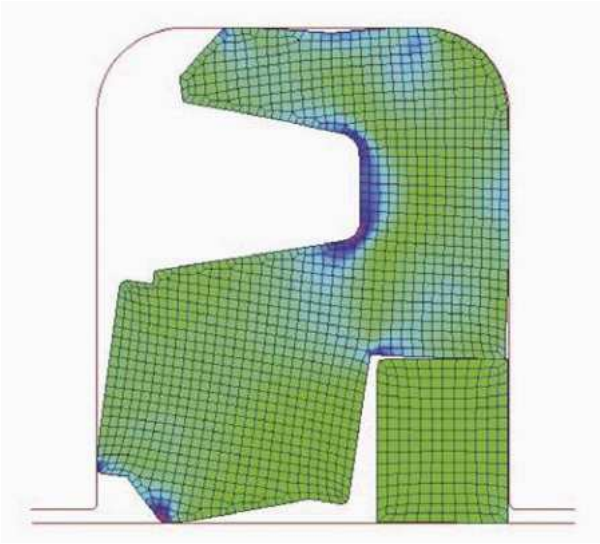

Figure 62: Zurcon® Buffer Seal un-pressurized

In un-pressurized conditions, head-on slots on the dynamic lip assure correct positioning, avoiding any risk of blow-by. The Zurcon® Buffer Seal is ready for fast activation, protecting the secondary seal from the peak of pressure.

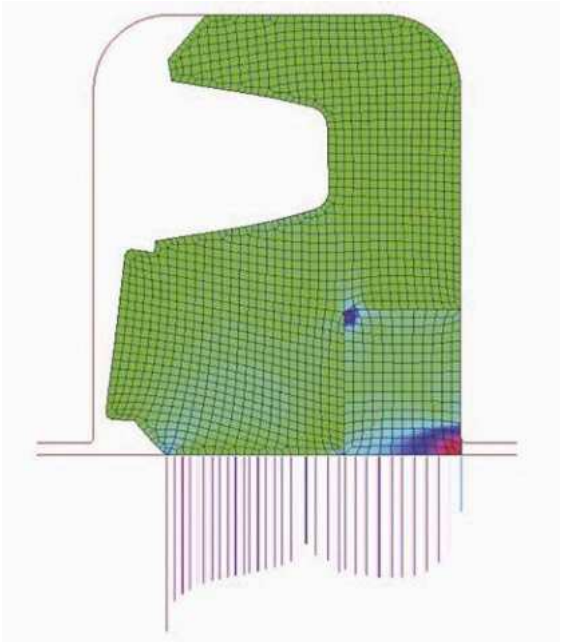

Figure 63: Pressure distribution at 40 MPa (5800 psi)

PRESSURE RELIEF

In a tandem configuration the Zurcon® Buffer Seal must assure a quick and complete pressure relief in order to reduce friction and wear of the secondary seal increasing the life and overall sealing performance. The relief mechanism is activated by the special seal design through its thin, short and flexible static lip. The radial channels on the back side offer the fluid a direct stream up to both lips. A minimum difference between the pressure trapped and the pressure in the chamber is able to deflect the seal and recover the same pressure level.

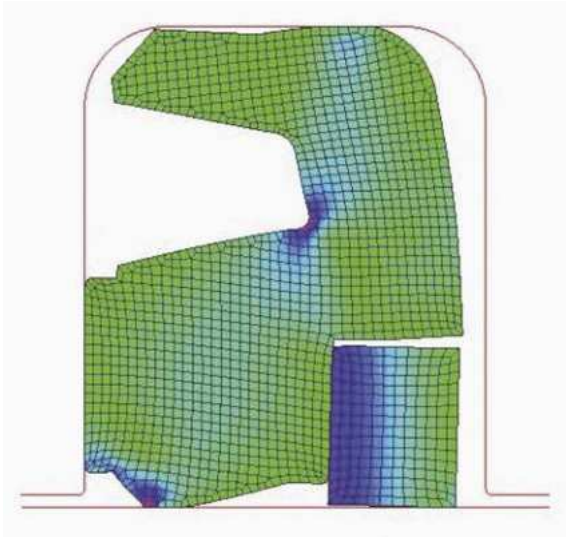

Figure 64: Pressure relief with a back pressure bigger of 0.5 MPa (72.5 psi)

ADVANTAGES

- Manufactured from Zurcon® and high-performance materials
- Conforms to ISO 7425/2 groove standards
- Suitable also for Stepseal® groove
- Excellent back-pumping over entire pressure range
- Resistant against high temperature and pressure
- Special design of dynamic seal lip for superior performance
- Designed with radial relief notches to prevent pressure
- Trapping of foreign particles
- Superior wear and abrasion resistance
- Low compression set

APPLICATION EXAMPLES

Medium and heavy duty applications:

- Mobile equipment
- Lift trucks
- Earthmoving equipment

MATERIALS - STANDARD APPLICATION

For hydraulic components in mineral oils or media with good lubricating performance.
Seal Ring: Zurcon® Z20 Standard polyurethane
Back-up Ring: Polyacetal resin (POM)
Set reference: Z2054

The Zurcon® polyurethane has high abrasion resistance, a low compression set, high extrusion resistance and a wide temperature range.

OPERATING CONDITIONS

The Zurcon® Buffer Seal is designed for high pressure rod sealing applications in extreme conditions.

Pressure:	Up to 40 MPa Up to 60 MPa peak
Velocity:	Up to 1 m/s
Temperature: Zurcon® Z20 Standard:	-35 °C to +110 °C
Media: Hydraulic fluids based on mineral oil:	-35 °C to +110 °C
Synthetic and natural ester HEES, HETG:	Up to +60 °C
Flame-retardant hydraulic fluids HFA/HFB:	Up to +40 °C

Table 46: Materials

Material Code	Material Description	Temp. Range	Application
Zurcon® Z20	High performance Polyurethane 94 Shore A; standard grade for hydraulic	-35 °C to +110 °C- 31 °F to +230 °F	Excellent abrasion and extrusion resistance, minimal swelling in mineral oil, acceptable hydrolysis resistance.

Installation Recommendation

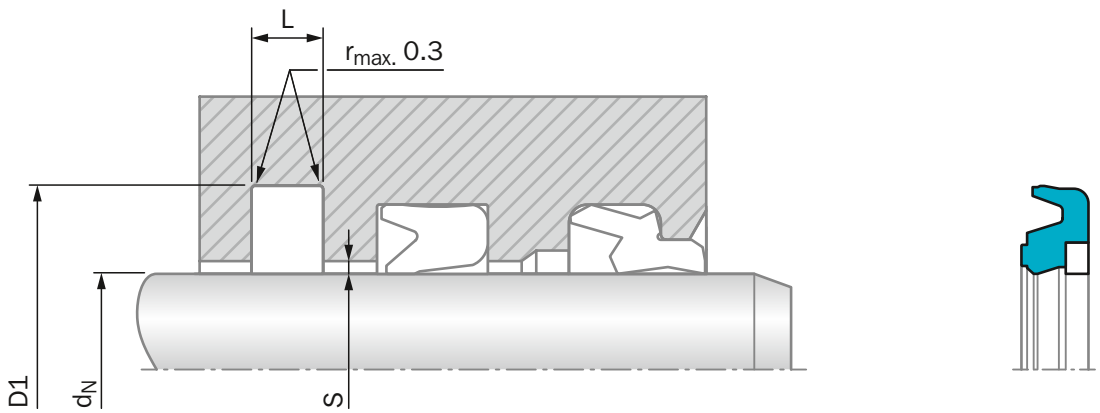

Figure 65: Installation Drawing

ORDERING EXAMPLE

Buffer Seal Type RUK

Rod Diameter:	d_N = 63.0 mm
Groove Diameter:	D1 = 78.5 mm
Groove Width:	L = 6.3 mm
TSS Part No.:	RUK3B0630 -

TSS Article No. **RUK3 B 0630 - Z2054**

- TSS Series No. — RUK3
- Type (Standard) — B
- Rod Diameter x 10 — 0630
- Quality Index (Standard) — -
- Material Code — Z2054

MATERIAL

Compound: Z2054
(Zurcon® Z20 + POM Back-up Ring)

Table 47: Installation Dimensions

Rod Diameter	Groove Diameter	Groove Width	Radial Clearance	TSS Article No.
d_N f8/h9	D1 +0.2	L +0.25	S_{max}	
40.0	55.5	6.3	0.4	RUK3B0400-Z2054
45.0	**60.5**	**6.3**	**0.4**	**RUK3B0450-Z2054**
50.0	**65.5**	**6.3**	**0.4**	**RUK3B0500-Z2054**
55.0	70.5	6.3	0.4	RUK3B0550-Z2054
56.0	**71.5**	**6.3**	**0.4**	**RUK3B0560-Z2054**
60.0	75.5	6.3	0.4	RUK3B0600-Z2054
63.0	**78.5**	**6.3**	**0.4**	**RUK3B0630-Z2054**
65.0	80.5	6.3	0.4	RUK3B0650-Z2054
70.0	**85.5**	**6.3**	**0.4**	**RUK3B0700-Z2054**
75.0	90.5	6.3	0.4	RUK3B0750-Z2054

Rod Diameter	Groove Diameter	Groove Width	Radial Clearance	TSS Article No.
d_N f8/h9	D1 +0.2	L +0.25	S_{max}	
80.0	**95.5**	**6.3**	**0.4**	**RUK3B0800-Z2054**
85.0	100.5	6.3	0.4	RUK3B0850-Z2054
90.0	**105.5**	**6.3**	**0.4**	**RUK3B0900-Z2054**
95.0	**110.5**	**6.3**	**0.4**	**RUK3B0950-Z2054**
100.0	**115.5**	**6.3**	**0.4**	**RUK3B1000-Z2054**
105.0	120.5	6.3	0.4	RUK3B1050-Z2054
110.0	**125.5**	**6.3**	**0.4**	**RUK3B1100-Z2054**
115.0	130.5	6.3	0.4	RUK3B1150-Z2054
125.0	**140.5**	**6.3**	**0.4**	**RUK3B1250-Z2054**
120.0	135.5	6.3	0.4	RUK3B1200 -Z2054
130.0	145.5	6.3	0.4	RUK3B1300 -Z2054
140.0	**155.5**	**6.3**	**0.4**	**RUK3B1400-Z2054**

Turcon® Variseal® M2

Single-acting

Spring Energized Plastic U-Cup

Material:
Turcon® and Zurcon®

Turcon® Variseal® M2

Description

Turcon® Variseal® M2 is a single acting seal consisting of a U-shaped jacket and a V-shaped corrosion resistant spring. Variseal® M2 has an asymmetric seal profile. The optimized front angle offers good leakage control, reduced friction and long service life.

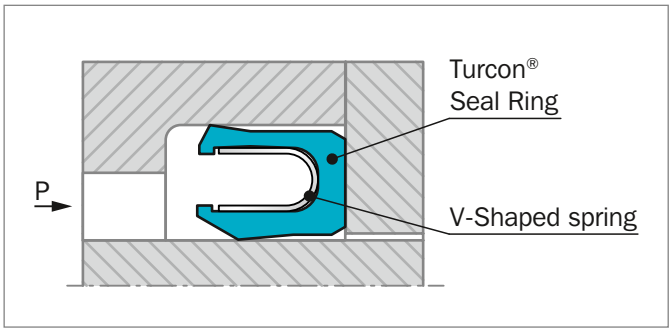

Figure 66: Turcon® Variseal® M2

AREAS OF APPLICATION

- Hydraulic components, e.g. cylinders, valves, pumps, etc.
- Chemical processing equipment
- Pharmaceutical processing
- Food and beverage processing
- Spindle seals for machine tools
- Pneumatics, cylinders and valves

ADVANTAGES

- Suitable for reciprocating and rotary applications
- Low coefficient of friction
- Stick-slip free operating
- High abrasion resistance
- Dimensionally stable
- Resistant to most fluids, chemicals and gases
- Withstands rapid changes in temperature
- No vulcanizing between seal and hardware
- Excellent resistance to aging
- Can be sterilized
- Available in Hi-Clean version
- Interchangeable with O-Ring and Back-up Ring combinations to AS4716 and ISO 6194

OPERATING CONDITIONS

Pressure:	Maximum dynamic load: 20 MPa Maximum static load: 40 MPa (207 MPa with back-up ring)
Speed:	Reciprocating up to 15 m/s Rotating up to 1.27 m/s
Operating temperature:	-70 °C to +300 °C Special Turcon and Zurcon® materials as well as alternative spring materials are available for applications outside this temperature range.
Media compatibility:	Virtually all fluids, chemicals and gases

IMPORTANT NOTE

The above data are maximum values and cannot be used at the same time. e.g. the maximum operating speed depends on material type, pressure, temperature and gap value. Temperature range also dependent on media.

GENERAL

Turcon® Variseal® are single acting, spring-energized seals which are used for dynamic and static applications.

Variseal® are effective in a wide range of applications. They are chosen when higher resistance to chemical media is required, if the seal is required to operate in extremes of temperature and/or where good extrusion and compression characteristics are needed.

Turcon® Variseal® designs have three main characteristics:

- Application specific U-shaped seal profile
- Spring geometry suited to the particular application
- Proven high-performance Turcon® or Zurcon® polymers

Standard or custom geometries available in metric, inch and intermediate sizes ranging from 2 to 3300 mm.

METHOD OF OPERATION

All Variseal® designs included in this catalog have the same operating principle and differ only in their profile form and type of metallic spring used.

The Variseal® spring supplies the load required for sealing at low pressures (Figure 67). The "U" shaped jacket allows fluid pressure to energize the sealing lips, so total sealing pressure rises with increasing operating pressure (Figure 68).

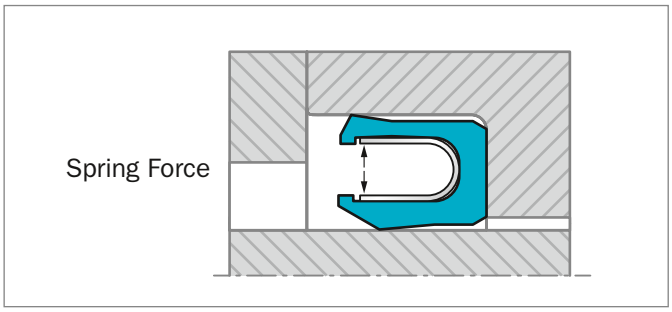

Figure 67: Turcon® Variseal® without system pressure

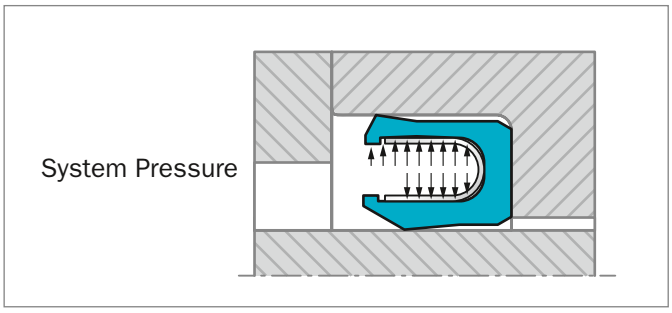

Figure 68: Turcon® Variseal® with system pressure

PERFORMANCE

The different types of Variseal® designs combined with the properties of Turcon® and Zurcon® materials offer design engineers a wide range of solutions to a large number of applications.

The most important characteristics of Variseal® designs are listed below:

- Very low coefficient of friction
- Good dynamic and static sealing
- Capable of sealing at high speeds up to 15 m/s
- Almost universal chemical compatibility
- Operating temperature of -253 °C up to +300 °C
- Very good thermal resistance
- Properties unaffected by contact with chemicals
- Good aging characteristics
- Low compression set
- Capable of withstanding high pressures above 200 MPa (2000 bar / 29000 psi) when using Back-up Rings
- Very good dry-running properties
- Can be installed in grooves according to AS4716 (Mil-G-5514 is an old spec) and DIN 3771

MATERIALS

All materials used are physiologically safe. They contain no odor or taste-affecting substances.

The following material combination has proved effective for most fluid applications:

Seal ring: Turcon® T40

Spring: Stainless Steel Material No. AISI 301
Code S

For gas application use:

Seal ring: Turcon® T05/Zurcon® Z80

For use in accordance with the demands of the "Food and Drug Administration", suitable materials are available on request.

Table 48: Turcon® and Zurcon® Materials for Variseal® M2

Material Code	Material Description	Operating Temp.* °C	Mating Surface Material	MPa max.
Turcon® T05	Premium grade modified PTFE. Light duty material with greater wear resistance than Turcon T01. Reciprocating and slow rotary applications. Color: Turquoise	-200 to + 260	Steel Steel, chromeplated Cast iron Stainless steel Aluminum Bronze Alloys	20
Turcon® T40	High-grade formulation of virgin polytetrafluoroethylene (PTFE) based material compounded with carbon fiber additive. Excellent wear and low friction characteristics. Suited to reciprocating and rotary applications. Suitable for use in media with poor lubricating properties and for dry-running situations. Color: Black / gray	-60 to + 300	Steel, hardened Steel, chromeplated	40
Zurcon® Z48	TPE (thermoplastic elastomer) for tight sealing with long wear life in applications without high temperatures or corrosive chemicals. Color: Black	-62 to +135	Steel Steel, chromeplated Cast iron Stainless steel Aluminum Bronze Alloys Ceramic coating	40
Zurcon® Z80	UHMW Polyethylene. Excellent wear and abrasion resistance. Very good lubricity in water based media. Color: Translucent white	-253 to + 93	Steel Steel, chromeplated Stainless steel Aluminum Bronze Ceramic coating	40

* Depending on media.
Highlighted material is standard.

Spring Materials

The standard spring material for Turcon® Variseal® is stainless steel (spring code S).

Table 49: Spring Material

Media	Spring materials	Spring order code
For General use e.g. Oil Grease Air Water, steam Solvents Food, drugs Gas	**Stainless steel** DIN Mat No. 1.4310/1.4319 AISI 301/302 UNS 30100	S (Standard spring material)
For use in corrosive media e.g. Acids Caustics Seawater	**Hastelloy®** C-276 DIN Mat No. 2.4819 UNS N10276	H
For petrochemical use e.g. Crude oil Sour gas	**Elgiloy®** 1) DIN Mat No. 2.4711 UNSR30003	E

® Hastelloy is a registered trademark of Haynes International, Inc.
® Elgiloy is a registered trademark of the Elgiloy Specialty Metals
Alternative brand may be used.
1) NACE-approval

Groove Design

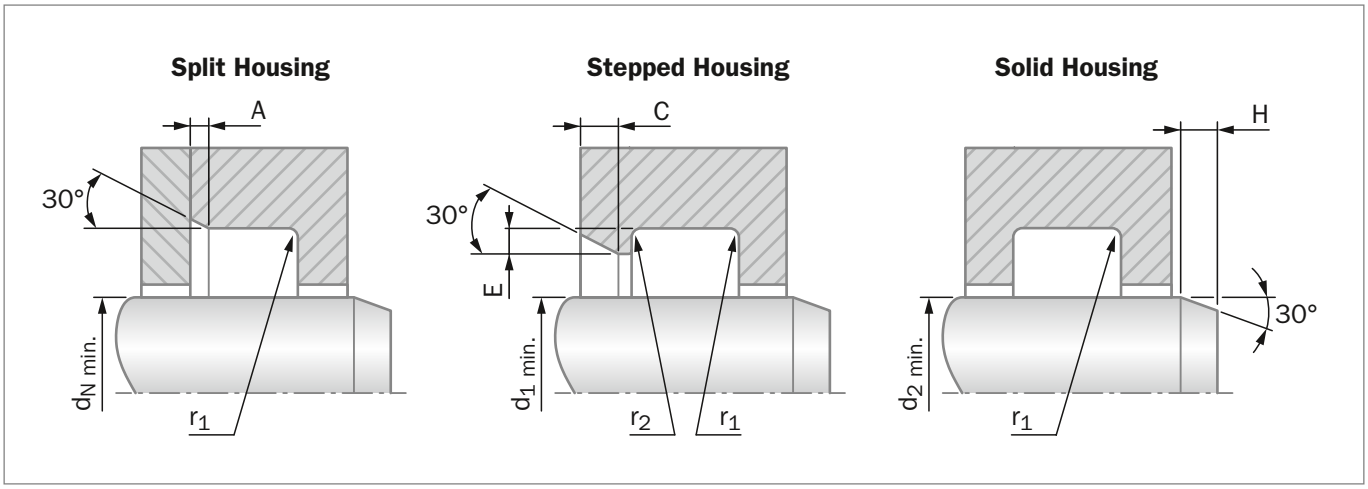

Figure 69: Variseal Groove Configurations

Installation lead-in chamfers and steps to include blend radii and are to be polished.

Table 50: Dimensions for Groove Designs

Series	Rod / Piston Groove Dimensions					
	A Chamfer	r1 Maximum Radius	C Minimum Chamfer	r2 Maximum Radius	E Minimum Step Height	H Minimum Chamfer
000	0.25 / 0.38	0.25	0.70	0.13	0.40	1.20
100	0.38 / 0.51	0.38	1.10	0.13	0.60	1.50
200	0.38 / 0.51	0.38	1.25	0.18	0.70	2.50
300	0.51 / 0.69	0.38	1.40	0.25	0.80	4.50
400	0.51 / 0.69	0.51	1.60	0.25	0.90	6.00
500	0.76 / 1.02	0.51	2.60	0.38	1.50	11.00

Table 51: Groove Design for Rod

Series	Rod Diameter Recommendations		
	Split Groove Ø d_N Minimum	Stepped Groove Ø d_1 Minimum	Solid Groove Ø d_2 Minimum
000	3.00	20.00	31.75
100	6.00	30.00	69.85
200	10.00	35.00	111.13
300	20.00	40.00	298.45
400	35.00	45.00	495.30
500	80.00	80.00	762.00

Installation Recommendation

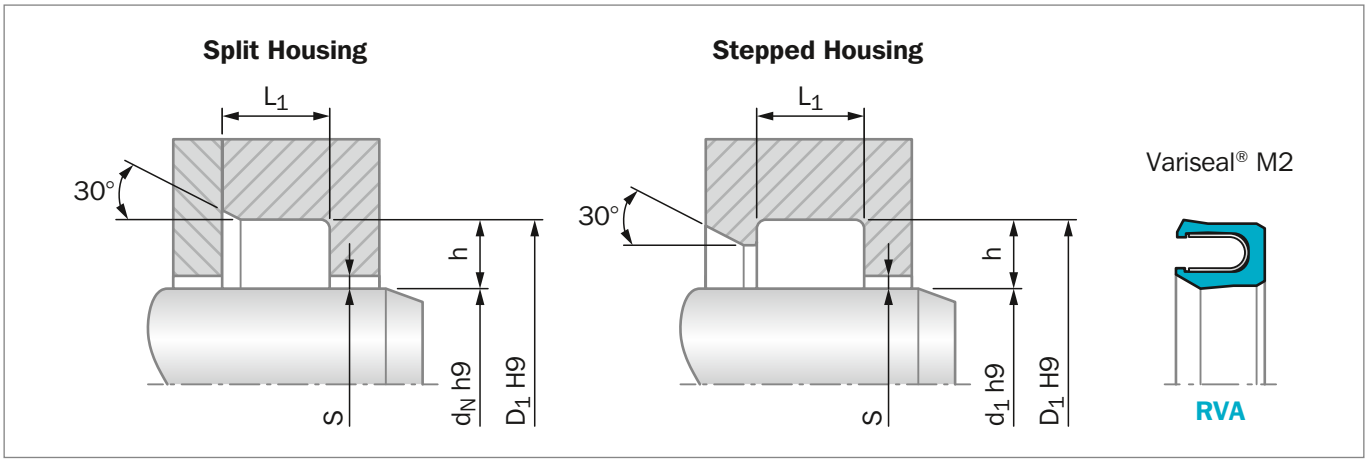

Figure 70: Installation Drawing (see Figure 69 for additional groove details)

Table 52: Installation Dimensions

Series No.	Rod Diameter d_N/d_1 H9		Groove Diameter	Groove Width	Radial Clearance S_{max}*			
	Recommended Range	Extended Range	D_1 H9	L_1 +0.2	<2 MPa	<10 MPa	<20 MPa	<40 MPa
RVA0	3.0 - 9.9	3.0 - 40.0	d_N/d_1 + 2.9	2.4	0.20	0.10	0.08	0.05
RVA1	10.0 - 19.9	6.0 - 200.0[3)]	d_N/d_1 + 4.5	3.6	0.25	0.15	0.10	0.07
RVA2	20.0 - 39.9	10.0 - 400.0[3)]	d_N/d_1 + 6.2	4.8	0.35	0.20	0.15	0.08
RVA3	40.0 - 119.9	20.0 - 700.0[3)]	d_N/d_1 + 9.4	7.1	0.50	0.25	0.20	0.10
RVA4	120.0 - 999.0	35.0 - 1600.0[3)]	d_N/d_1 + 12.2	9.5	0.60	0.30	0.25	0.12
RVA5	1000.0 - 2500.0	80.0 - 2500.0[3)]	d_N/d_1 + 19.0	15.0	0.90	0.50	0.40	0.20

ORDERING EXAMPLE

Turcon® Variseal® M2, recommended range.

Series:	Series RVA3 (from Table 51)
Rod Diameter:	d_N = 80.0 mm
TSS Part No.:	RVA300800 (from Table 52)

For other seal and spring materials please contact the Trelleborg Sealing Solutions representative.

TSS Article No. RVA3 0 0800 - T40 S M

- TSS Series No. — RVA3
- Type (Standard) — 0
- Rod Diameter x 10** — 0800
- Quality Index (Standard) — -
- Material Code (Seal Ring) — T40
- Material Code (Spring) — S
- Spring Load Medium — M

** For diameters ≥ 1000.0 mm multiply only by factor 1.
Example: RVA5 for diameter 1200.0 mm.
TSS Article No.: RVA5**X1200** - T40SM according to 15 digit part number system of latest Variseal catalog.

Table 53: Installation Dimensions / TSS Part No.

d_N	D_1	TSS Part No.	d_N	D_1	TSS Part No.	d_N	D_1	TSS Part No.
3.0	**5.9**	**RVA0_0030**	**32.0**	**38.2**	**RVA2_0320**	**80.0**	**89.4**	**RVA3_0800**
4.0	**6.9**	**RVA0_0040**	35.0	41.2	RVA2_0350	85.0	94.4	RVA3_0850
5.0	**7.9**	**RVA0_0050**	**36.0**	**42.2**	**RVA2_0360**	**90.0**	**99.4**	**RVA3_0900**
6.0	**8.9**	**RVA0_0060**	**40.0**	**49.4**	**RVA3_0400**	95.0	104.4	RVA3_0950
8.0	**10.9**	**RVA0_0080**	42.0	51.4	RVA3_0420	**100.0**	**109.4**	**RVA3_1000**
10.0	**14.5**	**RVA1_0100**	**45.0**	**54.4**	**RVA3_0450**	105.0	114.4	RVA3_1050
12.0	**16.5**	**RVA1_0120**	48.0	57.4	RVA3_0480	**110.0**	**119.4**	**RVA3_1100**
14.0	**18.5**	**RVA1_0140**	**50.0**	**59.4**	**RVA3_0500**	115.0	124.4	RVA3_1150
15.0	**19.5**	**RVA1_0150**	52.0	61.4	RVA3_0520	120.0	132.2	RVA4_1200
16.0	**20.5**	**RVA1_0160**	55.0	64.4	RVA3_0550	**125.0**	**137.2**	**RVA4_1250**
18.0	**22.5**	**RVA1_0180**	**56.0**	**65.4**	**RVA3_0560**	130.0	142.2	RVA4_1300
20.0	**26.2**	**RVA2_0200**	60.0	69.4	RVA3_0600	135.0	147.2	RVA4_1350
22.0	**28.2**	**RVA2_0220**	**63.0**	**72.4**	**RVA3_0630**	**140.0**	**152.2**	**RVA4_1400**
25.0	**31.2**	**RVA2_0250**	65.0	74.4	RVA3_0650			
28.0	**34.2**	**RVA2_0280**	**70.0**	**79.4**	**RVA3_0700**			
30.0	36.2	RVA2_0300	75.0	84.4	RVA3_0750			

Turcon® VL Seal®

Single-acting

Rubber-energized plastic-faced seal

Material:
Turcon®, Zurcon® and Elastomer

Turcon® VL Seal® *

Description

Turcon® VL Seal® is a unidirectional Rod seal for the same groove dimensions as standard O-Rings - Figure 71.

The design is optimized with regard to performance, friction, leakage and service life through meticulous simulation, in-house testing and qualification in the most demanding Aerospace applications.

VL Seal® effectively provides static sealing by the O-Ring. The O-Ring is protected from damage under pressure cycles by the contoured O-Ring contact zone which supports the O-Ring and keeps it in position also at high working pressure.

VL Seal® is designed with hydrodynamic back-pumping effect which allows the seal to relieve pressure trapped between tandem seals or between seals and double-acting scrapers.

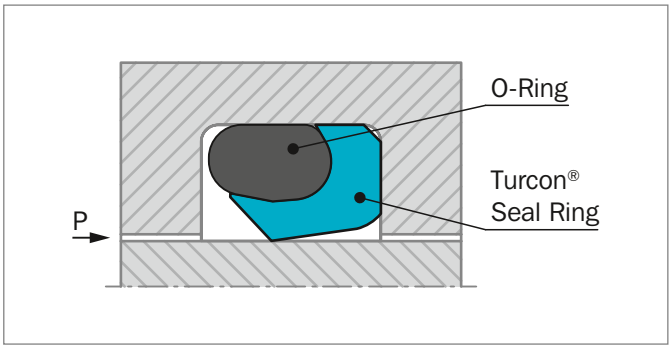

Figure 71: Turcon® VL Seal® mounted in O-Ring groove

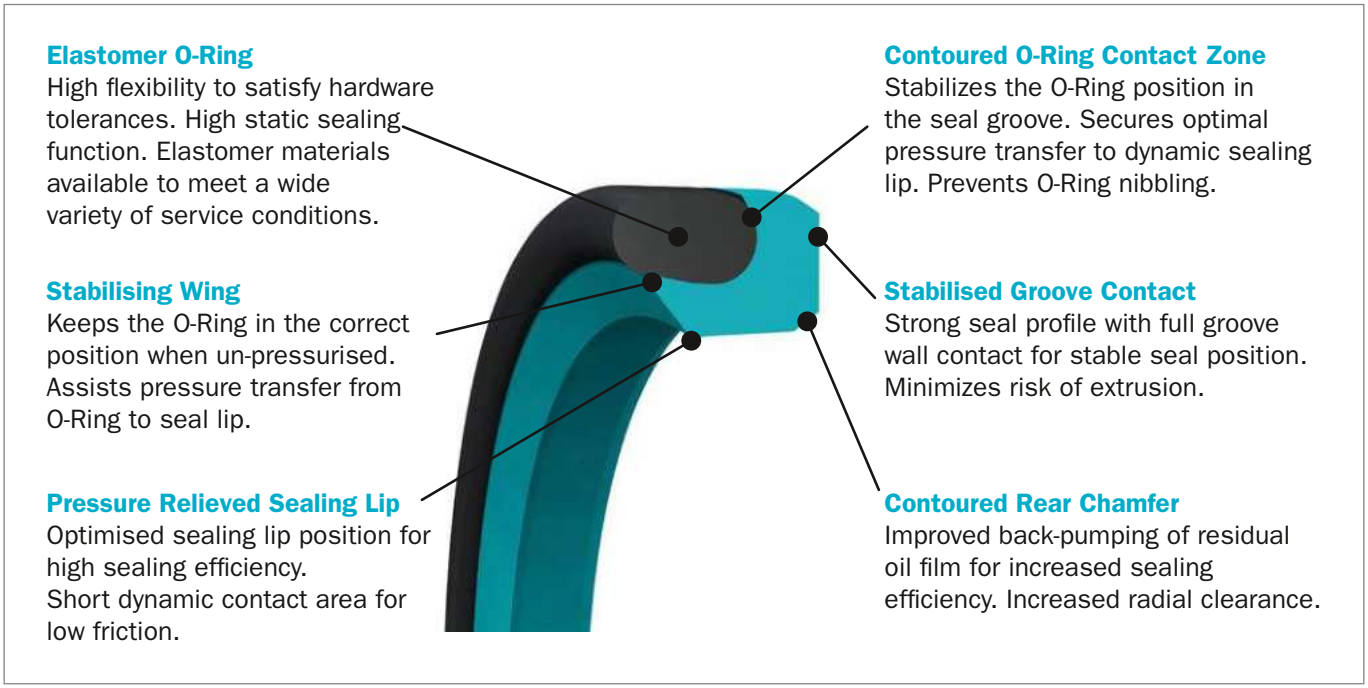

Figure 72: Turcon® VL Seal® design features

* Patent pending. (US Patent No. 6,497,415)

METHOD OF OPERATION

The sealing mechanism of VL Seal® is based on the hydrodynamic properties of the seal. The specially formed seal edge has a steep contact pressure gradient on the high pressure side and a shallow contact pressure gradient on the low pressure side. This ensures that the fluid film adhering to the piston rod is returned to the high pressure chamber on the return stroke of the rod, minimizing the risk of leaks.

This also prevents the build-up of inter-seal pressure normally associated with tandem seal configurations - Figure 73. Inter-seal pressure depends on the system pressure, speed, stroke length and groove design.

ADVANTAGES

- Groove design with shallow radial depth
- Optimized leakage control and service life
- Low friction with small contact area between seal and counter surface
- Featuring the Turcon® Stepseal® 2K back pumping effect
- Utilize standard O-Ring installation groove
- Available in all diameter sizes from 6 to 2600 mm

APPLICATION EXAMPLES

VL Seal® is recommended for hydraulics and general machine construction as an alternative to Stepseal® 2K and other single-acting seals for example in:

- Aerospace hydraulics
- Machine tools
- Automation
- Handling devises
- Telescopic cylinders
- Automobile industry
- Servo hydraulics
- Valves
- Valve stems
- Down-hole tools
- O-Ring replacement

OPERATING CONDITIONS

Pressure:	Up to 60 MPa
Speed:	Up to 15 m/s with linear movements, frequency up to 5 Hz
Temperature:	-45 °C to +200 °C depending on O-Ring material
Media:	Mineral oil-based hydraulic fluids, flame retardant hydraulic fluids, environmentally friendly hydraulic fluids (bio-oils), phosphate ester, water and others, depending on the seal and O-Ring material compatibility see Table 54
Clearance:	The maximum permissible radial clearance S_{max} is shown in Table 55, as a function of the operating pressure and functional diameter.

IMPORTANT NOTE

The above data are maximum values and cannot be used at the same time. e.g. the maximum operating speed depends on material type, pressure, temperature and gap value. Temperature range also dependent on media.

RADIAL NOTCH

VL Seal® can be delivered with radial notches at the low pressure side. This is an advantage if the seal is used in rotary applications. Notches can prevent the seal from rotating in the groove by avoiding pressurised fluid being trapped between seal and groove corner.

REDUNDANT SEALING SYSTEM

In many applications, secondary seal systems are required. Figure 71 shows such a tandem configuration with VL Seal® .

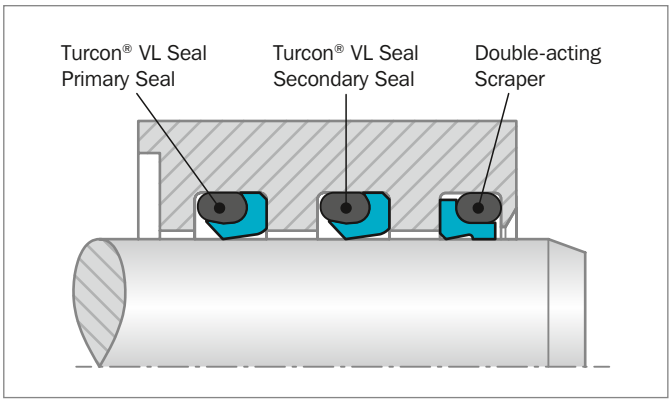

Figure 73: Turcon® VL Seal® in tandem configuration

INSTALLATION INSTRUCTIONS

VL Seal® is dimensionally interchangeable with seals for O-Ring housings, like Turcon® Double Delta® and Turcon® Variseal® M2. Groove dimensions, radial clearances and recommended seal series in relation to diameter are as illustrated in Table 55.

VL Seal® is preferably installed in closed grooves according to Figure 11 page 33. Depending on type and size installation in split grooves is also possible. Recommended minimum diameters for installation in closed grooves see Table 7 page 33.

RECOMMENDED MATERIALS

The following material combinations have proven effective for hydraulic applications:

Turcon® VL Seal ® in Turcon® M12
All round material for light to heavy hydraulic applications with linear, short stroke or helical movements in mineral oils, flame retardant hydraulic fluids, phosphate ester, bio-oils or fluids having lubricating properties:

O-Ring:	NBR 70 Shore A	N
	FKM 70 Shore A	V

Set code: M12N or M12V

Turcon® VL Seal ® in Turcon® T46
For media to heavy applictions with linear movements in mineral oils and other media with good lubrication.

O-Ring:	NBR 70 Shore A	N
	FKM 70 Shore A	V

Set code: T46N or T46V

Zurcon® Z52 is recommended for VL Seal® as an alternative to polyurethane U-Cups especially outside the size range of these products.

For specific applications, all Turcon® materials are available.

Other material combinations are listed in Table 54.

Table 54: Turcon® and Zurcon® Materials for VL Seal®

Material, Applications, Properties	Code	O-Ring Material Shore A	Code	O-Ring Operating Temp.* °C	Mating Surface Material	MPa max. Dynamic
Turcon® M12 First material choice for seals in linear motion Overall improved properties For new constructions and updating For all commonly applied hydraulic fluids including fluids with low lubrication performance Lowest friction and best sliding properties Lowest wear on seals Improved absorption of abrasive contaminants Low wear or abrasion of counter surface BAM tested Mineral fiber and Additives filled Color: Dark Gray	M12	NBR 70	N	-30 to +100	Steel Steel hardened Steel chrome plated (rod) Steel plated (rod) Cast iron Stainless steel Titanium	50
		NBR 70 Low temp.	T	-45 to +80		
		FKM 70	V	-10 to +200		
Turcon® T05 For lubricating fluids Also for gas service Very low friction Very good sliding and sealing properties Color: Turquoise	T05	NBR 70	N	-30 to +100	Steel Steel hardened Steel chrome plated (rod)	20
		NBR 70 Low temp.	T	-45 to +80		
		FKM 70	V	-10 to +200		
Turcon® T08 For lubricating fluids and linear motion Very high compressive strength and extrusion resistance Hard counter surfaces is recommended Bronze filled Color: Light to dark brown, which may have variations in shading	T08	NBR 70	N	-30 to +100	Steel hardened Steel chrome plated (rod) Cast iron	60
		NBR 70 Low temp.	T	-45 to +80		
		FKM 70	V	-10 to +200		
Turcon® T29 For lubricating and non-lubricating fluids Good extrusion resistance Surface texture is not suitable for gas sealing Not for electrically conducting fluids Carbon fiber filled Color: Gray	T29	NBR 70 S	N	-30 to +100	Steel Steel hardened Steel chrome plated (rod) Cast iron Stainless steel	30
		NBR 70 Low temp.	T	-45 to +80		
		FKM 70	V	-10 to +200		
		EPDM 70	E**	-45 to +145		
Turcon® T40 For lubricating and non-lubricating fluids High frequency and short strokes Water hydraulics Surface texture is not suitable for gas sealing Carbon fiber filled Color: Gray	T40	NBR 70	N	-30 to +100	Steel Steel hardened Steel chrome plated (rod) Cast iron Stainless steel Aluminum	25
		NBR 70 Low temp.	T	-45 to +80		
		FKM 70	V	-10 to +200		
		EPDM 70	E**	-45 to +145		

Table continues on next page

Material, Applications, Properties	Code	O-Ring Material Shore A	Code	O-Ring Operating Temp.* °C	Mating Surface Material	MPa max. Dynamic
Turcon® T46 For lubricated hydraulics in linear motion High compressive strength High extrusion resistance Very good sliding and wear properties BAM tested Bronze filled Color: Light to dark brown, which may have variations in shading.	T46	NBR 70	N	-30 to +100	Steel hardened Steel chrome plated (rod) Cast iron	50
		NBR 70 Low temp.	T	-45 to +80		
		FKM 70	V	-10 to +200		
Zurcon® Z51*** For mineral oil based fluids Very high abrasion and extrusion resistance For counter surface with rougher surface finish Limited chemical resistance Max. working temperature 110 °C Cast polyurethane Color: Yellow to light-brown	Z51	NBR 70	N	-30 to +100	Steel Steel hardened Steel chrome plated (rod) Cast iron Stainless steel Ceramic coating	60
		NBR 70 Low temp.	T	-45 to +80		
Zurcon® Z52*** For mineral oil based fluids Linear and slowly turning movements High abrasion resistance For counter surface with rougher surface finish Good extrusion resistance Limited chemical resistance Max. working temperature 110 °C Cast polyurethane Color: Turquoise	Z52	NBR 70	N	-30 to +100	Steel Steel hardened Steel chrome plated (rod) Cast iron Stainless steel Ceramic coating	25
		NBR 70 Low temp.	T	-45 to +80		
Zurcon® Z80 For lubricating and non-lubricating fluids Water based fluids, air and gases Dry air pneumatics High abrasion and extrusion resistance For service in abrasive conditions and media with particles Good chemical resistance Limited temperature capability (-60 to +80 °C) UHMWPE (Ultra High Molecular Weight Polyethylene) Color: White to off-white	Z80	NBR 70	N	-30 to +100	Steel Steel hardened Steel chrome plated (rod) Stainless steel Aluminum Ceramic coating	35
		NBR 70 Low temp.	T	-45 to +80		
		EPDM 70	E**	-45 to (+145)		

* The O-Ring Operation Temperature is only valid in mineral hydraulic oil.

** Material not suitable for mineral oils.

*** Max. diameter 2200 mm.

BAM: Tested by "Bundesanstalt Materialprüfung, Germany".

Highlighted materials are recommended.

Installation Recommendation

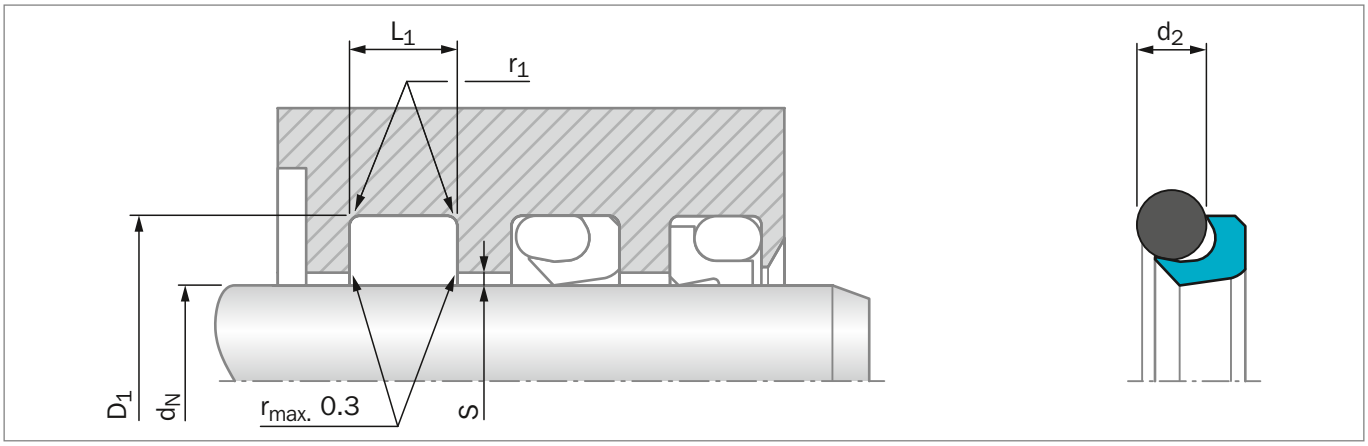

Figure 74: Installation Drawing

Table 55: Installation Dimensions - Standard Recommendations

Series No.	Rod Diameter d_N f8/h9		Groove Diameter	Groove Width	Radius	Radial Clearance S_{max}*			O-Ring Cross Section
	Standard Application	Available Range	D_1 H9	L_1 +0.2	$r_{1\,max}$	10 MPa	20 MPa	30 MPa	d_2
REL10	10 - 19.9	6 - 100.0	d_N + 4.5	3.6	0.4	0.40	0.25	0.15	1.78
REL20	20 - 39.9	10 - 200.0	d_N + 6.2	4.8	0.6	0.40	0.25	0.20	2.62
REL30	40 - 119.9	20 - 400.0	d_N + 9.4	7.1	0.8	0.50	0.30	0.20	3.53
REL40	120 - 399.9	35 - 650.0	d_N + 12.2	9.5	0.8	0.60	0.35	0.25	5.33
REL50	400 - 649.9	125 - 999.9	d_N + 15.9	12.2	0.8	0.70	0.50	0.30	7.00
REL60	650 - 999.9	400 - 999.9	d_N + 19.0	15.0	0.8	1.00	0.70	0.60	8.40
REL6X	1000 - 2600		d_N + 19.0	15.0	0.8	1.00	0.70	0.60	8.40

* At pressures **> 40 MPa** use diameter tolerance H8/f8 (bore/rod) in the area behind seal or consult your local Trelleborg Sealing Solutions marketing company for alternative material or profiles.
Slydring® / Wear Rings are not applicable at very small radial clearances please consult the Slydring® catalog.
For minimum diameter installation in closed grooves see Table 7 page 33.

ORDERING EXAMPLE

Turcon® VL Seal® complete with O-Ring, standard application:

Series:	REL40 from Table 55
Rod diameter:	d_N = 250.0 mm
TSS Part No.:	REL402500 from Table 56

Select the material from Table 54. The corresponding code numbers are appended to the TSS Part No. Together these form the TSS Article Number. The TSS Article Number for all intermediate sizes can be determined by following the example.

TSS Article No. **REL4 0 2500 - M12 N**

- Series No. — REL4
- Type (Standard)*** — 0
- Rod Diameter x 10** — 2500
- Quality Index (Standard) — -
- Material Code (Seal Ring) — M12
- Material Code (O-Ring) — N

** For diameters $d_N \geq$ 1,000.0 mm multiply only by factor 1.
Example: REL6X for diameter d_N = 1200.0 mm
TSS Article No.: REL6**X1200** - M12N

*** Use suffix "N" for seals with radial notches, for diameter d_N < 1000 mm. (Radial notches for diameter d_N ≥1000 mm a special part number is required).

Table 56: Installation Dimensions - Part No.

Rod Dia. d_N f8/h9	Groove Dia. D_1 H9	Groove Width L_1 +0.2	TSS Part No.	O-Ring Size
6.0	**10.5**	**3.6**	**REL100060**	**7.10 x 1.80**
8.0	**12.5**	**3.6**	**REL100080**	**9.25 x 1.78**
9.0	13.5	3.6	REL100090	10.60 x 1.80
10.0	**14.5**	**3.6**	**REL100100**	**11.20 x 1.80**
12.0	**16.5**	**3.6**	**REL100120**	**13.20 x 1.80**
12.7	17.2	3.6	REL100127	14.00 x 1.78
14.0	**18.5**	**3.6**	**REL100140**	**15.60 x 1.78**
15.0	19.5	3.6	REL100150	17.17 x 1.78
16.0	**20.5**	**3.6**	**REL100160**	**17.17 x 1.78**
18.0	**22.5**	**3.6**	**REL100180**	**19.00 x 1.80**
19.0	25.2	4.8	REL200190	20.29 x 2.62
20.0	**24.5**	**3.6**	**REL100200**	**21.95 x 1.78**
20.0	**26.2**	**4.8**	**REL200200**	**21.89 x 2.62**
22.0	**26.5**	**3.6**	**REL100220**	**23.52 x 1.78**
22.0	**28.2**	**4.8**	**REL200220**	**23.47 x 2.62**
24.0	28.5	3.6	REL100240	25.12 x 1.78
25.0	**29.5**	**3.6**	**REL100250**	**26.70 x 1.78**
25.0	**31.2**	**4.8**	**REL200250**	**26.64 x 2.62**
25.4	29.9	3.6	REL100254	26.70 x 1.78
25.4	31.6	4.8	REL200254	26.64 x 2.62
26.0	30.5	3.6	REL100260	28.30 x 1.78
26.0	32.2	4.8	REL200260	28.24 x 2.62
28.0	**32.5**	**3.6**	**REL100280**	**29.87 x 1.78**
28.0	**34.2**	**4.8**	**REL200280**	**29.82 x 2.62**
30.0	34.5	3.6	REL100300	31.47 x 1.78
30.0	36.2	4.8	REL200300	31.42 x 2.62
32.0	**36.5**	**3.6**	**REL100320**	**33.05 x 1.78**
32.0	**38.2**	**4.8**	**REL200320**	**34.59 x 2.62**
35.0	39.5	3.6	REL100350	37.82 x 1.78
35.0	41.2	4.8	REL200350	36.17 x 2.62
36.0	**40.5**	**3.6**	**REL100360**	**37.82 x 1.78**
36.0	**42.2**	**4.8**	**REL200360**	**37.77 x 2.62**
37.0	41.5	3.6	REL100370	37.82 x 1.78
37.0	43.2	4.8	REL200370	39.34 x 2.62
38.0	44.2	4.8	REL200380	39.34 x 2.62
38.0	47.4	7.1	REL300380	40.87 x 3.53
40.0	**46.2**	**4.8**	**REL200400**	**42.52 x 2.62**
40.0	**49.4**	**7.1**	**REL300400**	**44.04 x 3.53**
42.0	48.2	4.8	REL200420	44.12 x 2.62
42.0	51.4	7.1	REL300420	44.04 x 3.53

Rod Dia. d_N f8/h9	Groove Dia. D_1 H9	Groove Width L_1 +0.2	TSS Part No.	O-Ring Size
43.0	49.2	4.8	REL200430	44.12 x 2.62
45.0	**51.2**	**4.8**	**REL200450**	**47.29 x 2.62**
45.0	**54.4**	**7.1**	**REL300450**	**47.22 x 3.53**
48.0	54.2	4.8	REL200480	50.47 x 2.62
48.0	57.4	7.1	REL300480	50.39 x 3.53
50.0	**56.2**	**4.8**	**REL200500**	**52.07 x 2.62**
50.0	**59.4**	**7.1**	**REL300500**	**53.57 x 3.53**
50.8	57.0	4.8	REL200508	52.07 x 2.62
50.8	60.2	7.1	REL300508	53.57 x 3.53
52.0	58.2	4.8	REL200520	53.64 x 2.62
52.0	61.4	7.1	REL300520	56.74 x 3.53
54.0	63.4	7.1	REL300540	56.74 x 3.53
55.0	61.2	4.8	REL200550	56.82 x 2.62
55.0	64.4	7.1	REL300550	59.92 x 3.53
56.0	**62.2**	**4.8**	**REL200560**	**58.42 x 2.62**
56.0	**65.4**	**7.1**	**REL300560**	**59.92 x 3.53**
56.0	**68.2**	**9.5**	**REL400560**	**59.69 x 5.33**
60.0	66.2	4.8	REL200600	61.60 x 2.62
60.0	69.4	7.1	REL300600	63.09 x 3.53
63.0	**69.2**	**4.8**	**REL200630**	**64.77 x 2.62**
63.0	**72.4**	**7.1**	**REL300630**	**66.27 x 3.53**
65.0	71.2	4.8	REL200650	66.34 x 2.62
65.0	74.4	7.1	REL300650	69.44 x 3.53
70.0	**76.2**	**4.8**	**REL200700**	**71.12 x 2.62**
70.0	**79.4**	**7.1**	**REL300700**	**72.62 x 3.53**
70.0	**82.2**	**9.5**	**REL400700**	**75.57 x 5.33**
72.0	78.2	4.8	REL200720	75.87 x 2.62
75.0	81.2	4.8	REL200750	77.00 x 2.62
75.0	84.4	7.1	REL300750	78.97 x 3.53
76.2	85.6	7.1	REL300762	78.97 x 3.53
80.0	**86.2**	**4.8**	**REL200800**	**82.22 x 2.62**
80.0	**89.4**	**7.1**	**REL300800**	**82.14 x 3.53**
80.0	**92.2**	**9.5**	**REL400800**	**85.09 x 5.33**
85.0	91.2	4.8	REL200850	88.57 x 2.62
85.0	94.4	7.1	REL300850	88.49 x 3.53
85.0	97.2	9.5	REL400850	88.27 x 5.33
90.0	**96.2**	**4.8**	**REL200900**	**94.92 x 2.62**
90.0	**99.4**	**7.1**	**REL300900**	**94.84 x 3.53**
90.0	**102.2**	**9.5**	**REL400900**	**94.62 x 5.33**
95.0	101.2	4.8	REL200950	97.00 x 2.62

Rod Dia. d_N f8/h9	Groove Dia. D_1 H9	Groove Width L_1 +0.2	TSS Part No.	O-Ring Size
95.0	104.4	7.1	REL300950	98.02 x 3.53
100.0	**106.2**	**4.8**	**REL201000**	**101.27 x 2.62**
100.0	**109.4**	**7.1**	**REL301000**	**104.37 x 3.53**
100.0	**112.2**	**9.5**	**REL401000**	**104.14 x 5.33**
101.6	111.0	7.1	REL301016	104.37 x 3.53
105.0	114.4	7.1	REL301050	107.54 x 3.53
105.0	117.2	9.5	REL401050	110.49 x 5.33
110.0	**116.2**	**4.8**	**REL201100**	**113.97 x 2.62**
110.0	**119.4**	**7.1**	**REL301100**	**113.89 x 3.53**
110.0	**122.2**	**9.5**	**REL401100**	**113.67 x 5.33**
115.0	124.4	7.1	REL301150	117.07 x 3.53
120.0	129.4	7.1	REL301200	123.42 x 3.53
120.0	132.2	9.5	REL401200	123.19 x 5.33
125.0	**134.4**	**7.1**	**REL301250**	**129.77 x 3.53**
125.0	**137.2**	**9.5**	**REL401250**	**129.54 x 5.33**
127.0	136.4	7.1	REL301270	129.77 x 3.53
130.0	139.4	7.1	REL301300	132.94 x 3.53
130.0	142.2	9.5	REL401300	132.72 x 5.33
135.0	141.2	4.8	REL201350	139.37 x 2.62
135.0	144.4	7.1	REL301350	139.29 x 3.53
140.0	**146.2**	**4.8**	**REL201400**	**145.72 x 2.62**
140.0	**149.4**	**7.1**	**REL301400**	**142.47 x 3.53**
140.0	**152.2**	**9.5**	**REL401400**	**145.42 x 5.33**
145.0	154.4	7.1	REL301450	148.82 x 3.53
145.0	157.2	9.5	REL401450	148.49 x 5.33
150.0	159.4	7.1	REL301500	158.34 x 3.53
150.0	162.2	9.5	REL401500	158.12 x 5.33
155.0	164.4	7.1	REL301550	158.34 x 3.53
160.0	**169.4**	**7.1**	**REL301600**	**164.69 x 3.53**
160.0	**172.2**	**9.5**	**REL401600**	**164.47 x 5.33**
165.0	174.4	7.1	REL301650	171.04 x 3.53
170.0	179.4	7.1	REL301700	177.39 x 3.53
170.0	182.2	9.5	REL401700	177.17 x 5.33
175.0	184.4	7.1	REL301750	177.39 x 3.53
180.0	**189.4**	**7.1**	**REL301800**	**183.74 x 3.53**
180.0	**192.2**	**9.5**	**REL401800**	**183.52 x 5.33**
185.0	194.4	7.1	REL301850	190.09 x 3.53
185.0	197.2	9.5	REL401850	189.87 x 5.33
190.0	199.4	7.1	REL301900	196.44 x 3.53
190.0	202.2	9.5	REL401900	196.22 x 5.33
195.0	204.4	7.1	REL301950	202.79 x 3.53

Rod Dia. d_N f8/h9	Groove Dia. D_1 H9	Groove Width L_1 +0.2	TSS Part No.	O-Ring Size
200.0	**209.4**	**7.1**	**REL302000**	**202.79 x 3.53**
200.0	**212.2**	**9.5**	**REL402000**	**202.57 x 5.33**
205.0	217.2	9.5	REL402050	208.92 x 5.33
210.0	222.2	9.5	REL402100	215.27 x 5.33
215.0	227.2	9.5	REL402150	221.62 x 5.33
220.0	**232.2**	**9.5**	**REL402200**	**227.97 x 5.33**
225.0	237.2	9.5	REL402250	227.97 x 5.33
230.0	239.4	7.1	REL302300	234.54 x 3.53
230.0	242.2	9.5	REL402300	234.32 x 5.33
235.0	247.2	9.5	REL402350	240.67 x 5.33
240.0	252.2	9.5	REL402400	247.02 x 5.33
245.0	257.2	9.5	REL402450	253.37 x 5.33
250.0	**262.2**	**9.5**	**REL402500**	**253.37 x 5.33**
270.0	282.2	9.5	REL402700	278.77 x 5.33
275.0	287.2	9.5	REL402750	278.77 x 5.33
280.0	**292.2**	**9.5**	**REL402800**	**291.47 x 5.33**
285.0	297.2	9.5	REL402850	291.47 x 5.33
290.0	302.2	9.5	REL402900	304.17 x 5.33
295.0	307.2	9.5	REL402950	304.17 x 5.33
300.0	312.2	9.5	REL403000	304.17 x 5.33
310.0	322.2	9.5	REL403100	313.00 x 5.33
320.0	**332.2**	**9.5**	**REL403200**	**329.57 x 5.33**
330.0	342.2	9.5	REL403300	333.00 x 5.33
340.0	352.2	9.5	REL403400	354.97 x 5.33
350.0	362.2	9.5	REL403500	354.97 x 5.33
360.0	**372.2**	**9.5**	**REL403600**	**365.00 x 5.30**
370.0	382.2	9.5	REL403700	380.37 x 5.33
380.0	392.2	9.5	REL403800	383.00 x 5.33
390.0	402.2	9.5	REL403900	405.26 x 5.33
400.0	412.2	9.5	REL404000	405.26 x 5.33
400.0	415.9	12.2	REL504000	405.26 x 7.00
410.0	422.2	9.5	REL404100	413.00 x 5.33
420.0	432.2	9.5	REL404200	430.66 x 5.33
420.0	435.9	12.2	REL504200	430.66 x 7.00
430.0	442.2	9.5	REL404300	433.00 x 5.33
440.0	452.2	9.5	REL404400	456.06 x 5.33
450.0	462.2	9.5	REL404500	456.06 x 5.33
450.0	465.9	12.2	REL504500	456.06 x 7.00
460.0	472.2	9.5	REL404600	481.38 x 5.33
470.0	482.2	9.5	REL404700	481.38 x 5.33
480.0	492.2	9.5	REL404800	483.00 x 5.33

Rod Dia. d_N f8/h9	Groove Dia. D_1 H9	Groove Width L_1 +0.2	TSS Part No.	O-Ring Size
480.0	495.9	12.2	REL504800	494.16 x 7.00
490.0	502.2	9.5	REL404900	506.78 x 5.33
500.0	512.2	9.5	REL405000	506.78 x 5.33
500.0	515.9	12.2	REL505000	506.86 x 7.00
510.0	522.2	9.5	REL405100	532.18 x 5.33
520.0	532.2	9.5	REL405200	532.18 x 5.33
520.0	535.9	12.2	REL505200	532.26 x 7.00
530.0	542.2	9.5	REL405300	533.00 x 5.33
540.0	552.2	9.5	REL405400	557.58 x 5.33
550.0	562.2	9.5	REL405500	557.58 x 5.33
550.0	565.9	12.2	REL505500	557.66 x 7.00
560.0	572.2	9.5	REL405600	582.68 x 5.33
570.0	582.2	9.5	REL405700	582.68 x 5.33
580.0	592.2	9.5	REL405800	582.68 x 5.33
580.0	595.9	12.2	REL505800	608.08 x 7.00
590.0	602.2	9.5	REL405900	608.08 x 5.33
600.0	612.2	9.5	REL406000	608.08 x 5.33
600.0	615.9	12.2	REL506000	608.08 x 7.00
610.0	622.2	9.5	REL406100	633.48 x 5.33
620.0	632.2	9.5	REL406200	633.48 x 5.33
620.0	635.9	12.2	REL506200	633.48 x 7.00
630.0	642.2	9.5	REL406300	633.48 x 5.33
640.0	652.2	9.5	REL406400	658.88 x 5.33
650.0	665.9	12.2	REL506500	658.88 x 7.00
650.0	669.0	15.0	REL606500	654.00 x 8.40
660.0	675.9	12.2	REL506600	664.00 x 7.00
660.0	679.0	15.0	REL606600	664.00 x 8.40
680.0	695.9	12.2	REL506800	684.00 x 7.00
680.0	699.0	15.0	REL606800	684.00 x 8.40
700.0	715.9	12.2	REL507000	704.00 x 7.00
700.0	719.0	15.0	REL607000	704.00 x 8.40
710.0	725.9	12.2	REL507100	714.00 x 7.00
710.0	729.0	15.0	REL607100	714.00 x 8.40
730.0	745.9	12.2	REL507300	734.00 x 7.00
730.0	749.0	15.0	REL607300	734.00 x 8.40
760.0	775.9	12.2	REL507600	764.00 x 7.00
760.0	779.0	15.0	REL607600	764.00 x 8.40
780.0	795.9	12.2	REL507800	784.00 x 7.00
780.0	799.0	15.0	REL607800	784.00 x 8.40
790.0	805.9	12.2	REL507900	794.00 x 7.00
790.0	809.0	15.0	REL607900	794.00 x 8.40

Rod Dia. d_N f8/h9	Groove Dia. D_1 H9	Groove Width L_1 +0.2	TSS Part No.	O-Ring Size
800.0	815.9	12.2	REL508000	804.00 x 7.00
800.0	819.0	15.0	REL608000	804.00 x 8.40
810.0	825.9	12.2	REL508100	814.00 x 7.00
810.0	829.0	15.0	REL608100	814.00 x 8.40
820.0	835.9	12.2	REL508200	824.00 x 7.00
820.0	839.0	15.0	REL608200	824.00 x 8.40
830.0	845.9	12.2	REL508300	834.00 x 7.00
830.0	849.0	15.0	REL608300	834.00 x 8.40
850.0	865.9	12.2	REL508500	854.00 x 7.00
850.0	869.0	15.0	REL608500	854.00 x 8.40
870.0	885.9	12.2	REL508700	874.00 x 7.00
870.0	889.0	15.0	REL608700	874.00 x 8.40
880.0	895.9	12.2	REL508800	884.00 x 7.00
880.0	899.0	15.0	REL608800	884.00 x 8.40
890.0	905.9	12.2	REL508900	894.00 x 7.00
890.0	909.0	15.0	REL608900	894.00 x 8.40
930.0	945.9	12.2	REL509300	934.00 x 7.00
930.0	949.0	15.0	REL609300	934.00 x 8.40
1000.0	1019.0	15.0	REL6X1000	1004.00 x 8.40
1050.0	1069.0	15.0	REL6X1050	1054.00 x 8.40
1100.0	1119.0	15.0	REL6X1100	1104.00 x 8.40
1200.0	1219.0	15.0	REL6X1200	1204.00 x 8.40
1500.0	1519.0	15.0	REL6X1500	1504.00 x 8.40
1600.0	1619.0	15.0	REL6X1600	1604.00 x 8.40
2000.0	2019.0	15.0	REL6X2000	2004.00 x 8.40
2600.0	2619.0	15.0	REL6X2600	2604.00 x 8.40

The rod diameters in **bold** type are in accordance with the recommendations of ISO 3320.

Other dimensions and all intermediate sizes up to 2600 mm diameter, including imperial (inch) sizes converted to mm, can be supplied.

Turcon® Glyd Ring®

Double-acting

Rubber-energized plastic-faced seal

Material:
Turcon®, Zurcon® and Elastomer

Turcon® Glyd Ring®

Description

Turcon® Glyd Ring® is a very effective and reliable low friction seal. It is particularly suitable as a rod seal in both high and low pressure systems.

The double-acting Glyd Ring® is a combination of a Turcon® based slipper seal and an energizing O-Ring. It has an interference fit which together with the squeeze of the O-Ring ensures a good sealing effect even at low pressure. At higher system pressures, the O-Ring is energized by the fluid, pushing Glyd Ring® against the sealing face with increased force.

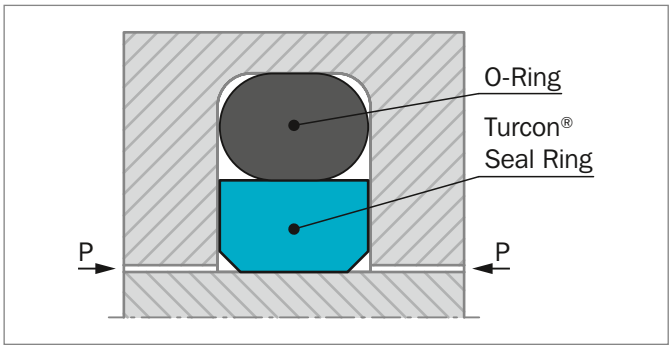

Figure 75: Turcon® Glyd Ring®

The geometry of Glyd Ring® ensures good static sealing and allows the lubricating hydrodynamic fluid film to be built under the seal in linear applications.

ADVANTAGES

- No stick-slip effect when starting for smooth operation
- Minimum static and dynamic friction for a minimum energy loss and operating temperature
- Suitable for non lubricating fluids depending on seal material for optimum design flexibility
- High wear resistance ensures long service life
- Fits standard Stepseal® groove dimensions as well as ISO 7425-2 seal housing
- No adhesive effect to the mating surface during long period of inactivity or storage
- Suitable for most hydraulic fluids in relation with most modern hardware materials and surface finish depending on material selected.
- Suitable for environmentally friendly hydraulic fluids
- Available for all rod diameters up to 2600 mm

APPLICATIONS EXAMPLES

Over several decades Glyd Ring® has been successfully implemented in a large variety applications as double acting Rod seals in hydraulic components such as:

- Injection molding machines
- Machine tools
- Presses
- Handling machinery
- Valve stems
- Valves for hydraulic & pneumatic circuits.
- Servo equipment
- Hydraulic motors
- Brake booster
- Jacks

OPERATING CONDITIONS

Glyd Ring® is recommended for linear (with a length of stroke at least twice the groove width) and helical movements.

Pressure:	Up to 60 MPa
Speed:	Up to 15 m/s
Frequency:	Up to 5 Hz.
Temperature:	-45 °C to +200 °C depending on O-Ring material
Media:	Mineral oil-based hydraulic fluids, flame retardant hydraulic fluids, environmentally friendly hydraulic fluids (bio-oils), phosphate ester, water, air and others, depending on the seal and O-Ring material compatibility , see Table 57.
Clearance:	The maximum permissible radial clearance S_{max} is shown in Table 58, as a function of the operating pressure and functional diameter.

IMPORTANT NOTE

The above data are maximum values and cannot be used at the same time, e.g. the maximum operating speed depends on material type, pressure, temperature and gap value. Temperature range also depends on media.

NOTCHES

To assure that a rapid energizing of the seal takes place at sudden changes of pressure and direction of motion, the seal can be delivered with radial notches on both sides.

Ordering of Glyd Ring® with notches see page 179.

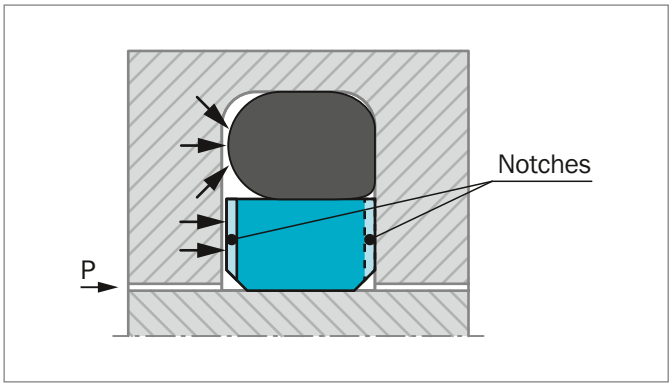

Figure 76: Turcon® Glyd Ring® with notches

INSTALLATION INSTRUCTIONS

Glyd Ring® is installed according to information on page 31 and page 32

Closed groove installation applies same dimensions as for Turcon® Stepseal® 2K in Table 6 page 32.

RECOMMENDED MATERIALS

The following material combinations have proven effective for hydraulic applications:

Turcon® Glyd Ring® in Turcon® M12
All round material for light to heavy hydraulic applications with linear or helical movements in mineral oils, flame retardant hydraulic fluids, phosphate ester, bio-oils or fluids having low lubricating properties:

O-Ring:	NBR 70 Shore A	N
	FKM 70 Shore A	V
Set code:	M12N or M12V	

Turcon® Glyd Ring® in Turcon® T46
For media to heavy applications with linear movements in mineral oils and other media with good lubrication:

O-Ring:	NBR 70 Shore A	N
	FKM 70 Shore A	V
Set code:	T46N or T46V	

For specific applications, all Turcon® materials are available. Other material combinations are listed in Table 57.

Table 57: Turcon® and Zurcon® Materials for Glyd Ring®

Material, Applications, Properties	Code	O-Ring Material Shore A	Code	O-Ring Operating Temp.* °C	Mating Surface Material	MPa max. Dynamic
Turcon® M12 First material choice for seals in linear motion Overall improved properties For new constructions and updating For all commonly applied hydraulic fluids including fluids with low lubrication performance Lowest friction and best sliding properties Lowest wear on seals Improved absorption of abrasive contaminanants Low wear or abrasion of counter surface BAM tested Mineral fiber and Additives filled Color: Dark gray	M12	NBR 70	N	-30 to +100	Steel Steel hardened Steel chrome plated (rod) Steel plated (rod) Cast iron Stainless steel Titanium	50
		NBR 70 Low temp.	T	-45 to +80		
		FKM 70	V	-10 to +200		
Turcon® T05 For lubricating fluids Also for gas service Very low friction Very good sliding and sealing properties Color: Turquoise	T05	NBR 70	N	-30 to +100	Steel Steel, hardened Steel chrome plated (rod)	20
		NBR 70 Low temp.	T	-45 to +80		
		FKM 70	V	-10 to +200		
Turcon® T08 For lubricating fluids and linear motion Very high compressive strength and good extrusion resistance Hard counter surfaces is recommended Bronze filled Color: Light to dark brown which may have variations in shading	T08	NBR 70	N	-30 to +100	Steel, hardened Steel chrome plated (rod) Cast iron	60
		NBR 70 Low temp.	T	-45 to +80		
		FKM 70	V	-10 to +200		
Turcon® T10 For hydraulic and pneumatic For lubricating and non-lubricating fluids High extrusion resistance Good chemical resistance Not for electrically conducting fluids BAM tested. Carbon, graphite filled Color: Black	T10	NBR 70	N	-30 to +100	Steel Steel hardened Steel chrome plated (rod) Stainless steel	40
		NBR 70 Low temp.	T	-45 to +80		
		FKM 70	V	-10 to +200		
		EPDM 70	E**	-45 to +145		
Turcon® T29 For all lubricating and non-lubricating fluids Good extrusion resistance Surface texture is not suitable for gas sealing Not for electrically conducting fluids Carbon fiber filled Color: Gray	T29	NBR 70	N	-30 to +100	Steel Steel hardened Steel chrome plated (rod) Cast iron Stainless steel	30
		NBR 70 Low temp.	T	-45 to +80		
		FKM 70	V	-10 to +200		
		EPDM 70	E**	-45 to +145		

Table continues on next page

Material, Applications, Properties	Code	O-Ring Material Shore A	Code	O-Ring Operating Temp.* °C	Mating Surface Material	MPa max. Dyna-mic
Turcon® T40 For all lubricating and non-lubricating fluids Water hydraulics Surface texture not suitable for gas sealing Carbon fiber filled Color: Gray	T40	NBR 70	N	-30 to +100	Steel Steel hardened Steel chrome plated (rod) Cast iron Stainless steel Aluminum	25
		NBR 70 Low temp.	T	-45 to +80		
		FKM 70	V	-10 to +200		
		EPDM 70	E**	-45 to +145		
Turcon® T46 For lubricated hydraulics in linear motion High compressive strength High extrusion resistance Very good sliding and wear properties BAM tested Bronze filled Color: Light to dark brown, which may have variations in shading	T46	NBR 70	N	-30 to +100	Steel hardened Steel chrome plated (rod) Cast iron	50
		NBR 70 Low temp	T	-45 to +80		
		FKM 70	V	-10 to +200		
Zurcon® Z51*** For mineral oil based fluids Very high abrasion and extrusion resistance For counter surface with rougher surface finish Limited chemical resistance. Max. working termperature 110 °C Cast polyurethane Color: Yellow to light-brown	Z51	NBR 70	N	-30 to +100	Steel Steel hardened Steel chrome plated (rod) Cast iron Ceramic coating Stainless steel	60
		NBR 70 Low temp.	T	-45 to +80		
Zurcon® Z80 For lubricating and non-lubricating fluids Water based fluids, air and gases Dry air pneumatics High abrasion and extrusion resistance For service in abrasive conditions and media with particles Good chemical resistance Limited temperature capability (-60 to +80 °C) UHMWPE (Ultra High Molecular Weight Polyethylene) Color: White to off-white	Z80	NBR 70	N	-30 to (+100)	Steel Steel hardened Steel, chrome plated (rod) Stainless steel Aluminum Ceramic coating	35
		NBR 70 Low temp.	T	-45 to +80		
		EPDM 70	E**	-45 to (+145)		

* The O-Ring Operation Temperature is only valid in mineral hydraulic oil (except EPDM).

** Material not suitable for mineral oils.

*** Max. diameter 2200 mm

BAM: Tested by "Bundesanstalt Materialprüfung, Germany"

Highlighted materials are recommended.

Installation Recommendation

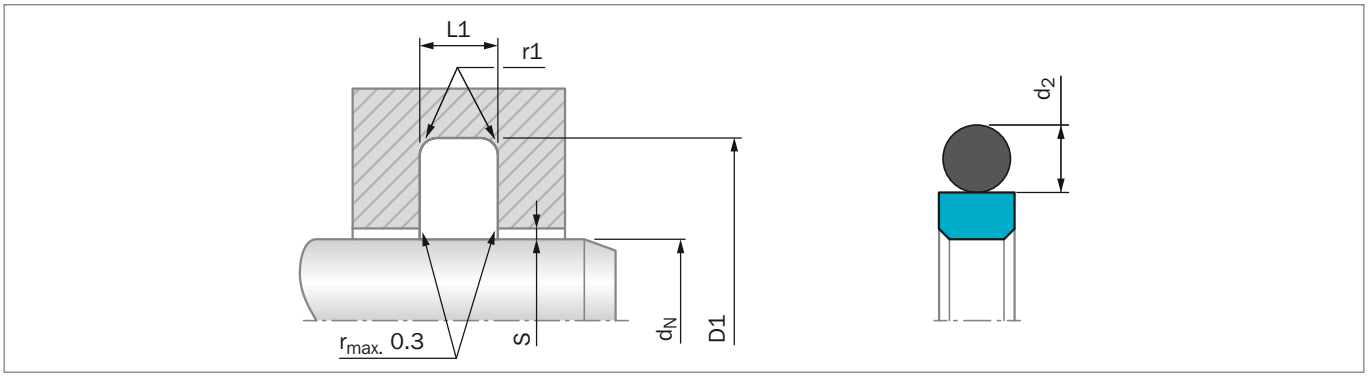

Figure 77: Installation Drawing

Table 58: Installation Dimensions – Standard Recommendations

Rod Diameter d_N f8/h9			Groove Diameter*	Groove Width	Radius	Radial Clearance S_{max}**			O-Ring Cross Section
Series No. RG 43 Standard Application	**Series No. RG 45 Light Application**	**Series No. RG 41 Heavy Duty Application**	**D1** H9	**L1** +0.2	$r_{1\,max}$	**10 MPa**	**20 MPa**	**40 MPa**	d_2
3 - 7.9	8 - 18.9	-	d_N + 4.9	2.2	0.4	0.30	0.20	0.15	1.78
8 - 18.9	19 - 37.9	3 - 7.9	d_N + 7.3	3.2	0.6	0.40	0.25	0.15	2.62
19 - 37.9	38 - 199.9	8 - 18.9	d_N + 10.7	4.2	1.0	0.40	0.25	0.20	3.53
38 - 199.9	200 - 255.9	19 - 37.9	d_N + 15.1	6.3	1.3	0.50	0.30	0.20	5.33
200 - 255.9	256 - 649.9	38 - 199.9	d_N + 20.5	8.1	1.8	0.60	0.35	0.25	7.00
256 - 649.9	650 - 999.9	200 - 255.9	d_N + 24.0	8.1	1.8	0.60	0.35	0.25	7.00
650 - 999.9	1000 - 1200	256 - 649.9	d_N + 27.3	9.5	2.5	0.70	0.50	0.30	8.40
1000 - 2600***	-	650 - 999.9	d_N + 38.0	13.8	3.0	1.00	0.70	0.60	12.00

* Installation with groove dimensions to ISO 7425-2 is also recommendable.
** At pressures **> 40 MPa** use diameter tolerance H8/f8 (bore/rod) in the area of the seal or consult your local Trelleborg Sealing Solutions marketing company for alternative material or profiles.
Slydring® / Wear Rings are not applicable at very small radial clearances please consult the Slydring® catalog.
*** O-Rings with 12 mm cross section are delivered as special profile ring.

ORDERING EXAMPLE

Turcon® Glyd Ring® complete with O-Ring, standard application:

Series:	RG43 from Table 58
Rod diameter:	d_N = 80.0 mm
TSS Part No.:	RG4300800 from Table 59

Select the material from Table 57. The corresponding code numbers are appended to the TSS Part No. Together these form the TSS Article Number. The TSS Article Number for all intermediate sizes can be determined by following the example.

TSS Article No. RG43 0 0800 - M12 N

- Series No. — RG43
- Type (Standard)***** — 0
- Rod Diameter x 10**** — 0800
- Quality Index (Standard) — -
- Material Code (Seal Ring) — M12
- Material Code (O-Ring) — N

**** For diameters $d_N \geq 1000.0$ mm multiply only by factor 1.
Example: RG43 for diamater d_N = 1200.0 mm
TSS Article No.: RG43**X1200** - M12N

***** Ordering Glyd Ring® with radial notches, please use suffix "N" in the fifth character, for diameter d_N < 1000 mm (Radial notches for diameter dN ≥ 1000 mm a special part number is required).

Table 59: Installation Dimensions / TSS Part No.

Rod Dia. d_N f8/h9	Groove Dia. D_1 H9	Groove Width L_1 +0.2	TSS Part No.	O-Ring Size
3.0	7.9	2.2	RG4300030	4.47 x 1.78
4.0	**8.9**	**2.2**	**RG4300040**	**5.60 x 1.80**
5.0	**9.9**	**2.2**	**RG4300050**	**6.70 x 1.80**
6.0	**10.9**	**2.2**	**RG4300060**	**7.65 x 1.78**
7.0	11.9	2.2	RG4300070	8.75 x 1.80
8.0	**12.9**	**2.2**	**RG4500080**	**9.50 x 1.80**
8.0	**15.3**	**3.2**	**RG4300080**	**10.77 x 2.62**
10.0	**14.9**	**2.2**	**RG4500100**	**11.80 x 1.80**
10.0	**17.3**	**3.2**	**RG4300100**	**12.37 x 2.62**
12.0	**16.9**	**2.2**	**RG4500120**	**13.20 x 1.80**
12.0	**19.3**	**3.2**	**RG4300120**	**14.50 x 2.65**
14.0	**18.9**	**2.2**	**RG4500140**	**15.60 x 1.78**
14.0	**21.3**	**3.2**	**RG4300140**	**17.12 x 2.62**
15.0	19.9	2.2	RG4500150	17.17 x 1.78
15.0	22.3	3.2	RG4300150	18.00 x 2.65
16.0	**20.9**	**2.2**	**RG4500160**	**17.17 x 1.78**
16.0	**23.3**	**3.2**	**RG4300160**	**18.72 x 2.62**
18.0	**22.9**	**2.2**	**RG4500180**	**19.00 x 1.80**
18.0	**25.3**	**3.2**	**RG4300180**	**20.29 x 2.62**
19.0	29.7	4.2	RG4300190	23.40 x 3.53
20.0	**27.3**	**3.2**	**RG4500200**	**21.89 x 2.62**
20.0	**30.7**	**4.2**	**RG4300200**	**23.40 x 3.53**
22.0	**29.3**	**3.2**	**RG4500220**	**25.07 x 2.62**
22.0	**32.7**	**4.2**	**RG4300220**	**26.58 x 3.53**
24.0	31.3	3.2	RG4500240	26.64 x 2.62
25.0	**32.3**	**3.2**	**RG4500250**	**28.24 x 2.62**
25.0	**35.7**	**4.2**	**RG4300250**	**29.75 x 3.53**
25.4	32.7	3.2	RG4500254	28.24 x 2.62
25.4	36.1	4.2	RG4300254	29.75 x 3.53
26.0	33.3	3.2	RG4500260	28.24 x 2.62
26.0	36.7	4.2	RG4300260	29.75 x 3.53
27.0	34.3	3.2	RG4500270	29.82 x 2.62
28.0	**35.3**	**3.2**	**RG4500280**	**29.82 x 2.62**
28.0	**38.7**	**4.2**	**RG4300280**	**32.92 x 3.53**
28.575	35.9	3.2	RG4500286	31.42 x 2.62
29.0	36.3	3.2	RG4500290	31.42 x 2.62
30.0	37.3	3.2	RG4500300	32.99 x 2.62
30.0	40.7	4.2	RG4300300	34.52 x 3.53
32.0	**39.3**	**3.2**	**RG4500320**	**34.59 x 2.62**
32.0	**42.7**	**4.2**	**RG4300320**	**36.09 x 3.53**

Rod Dia. d_N f8/h9	Groove Dia. D_1 H9	Groove Width L_1 +0.2	TSS Part No.	O-Ring Size
35.0	42.3	3.2	RG4500350	37.77 x 2.62
35.0	45.7	4.2	RG4300350	37.69 x 3.53
36.0	**43.3**	**3.2**	**RG4500360**	**39.34 x 2.62**
36.0	**46.7**	**4.2**	**RG4300360**	**40.87 x 3.53**
38.0	48.7	4.2	RG4500380	40.87 x 3.53
38.0	53.1	6.3	RG4300380	43.82 x 5.33
39.0	49.7	4.2	RG4500390	44.04 x 3.53
40.0	**50.7**	**4.2**	**RG4500400**	**44.04 x 3.53**
40.0	**55.1**	**6.3**	**RG4300400**	**43.82 x 5.33**
42.0	52.7	4.2	RG4500420	47.22 x 3.53
42.0	57.1	6.3	RG4300420	46.99 x 5.33
44.0	54.7	4.2	RG4500440	47.22 x 3.53
44.45	59.5	6.3	RG4300444	50.17 x 5.33
45.0	**55.7**	**4.2**	**RG4500450**	**50.39 x 3.53**
45.0	**60.1**	**6.3**	**RG4300450**	**50.17 x 5.33**
48.0	58.7	4.2	RG4500480	51.50 x 3.55
48.0	63.1	6.3	RG4300480	53.34 x 5.33
50.0	**60.7**	**4.2**	**RG4500500**	**53.57 x 3.53**
50.0	**65.1**	**6.3**	**RG4300500**	**56.52 x 5.33**
50.8	61.5	4.2	RG4500508	53.57 x 3.53
50.8	65.9	6.3	RG4300508	56.52 x 5.33
52.0	62.7	4.2	RG4500520	56.74 x 3.53
52.0	67.1	6.3	RG4300520	56.52 x 5.33
54.0	69.1	6.3	RG4300540	59.69 x 5.33
55.0	65.7	4.2	RG4500550	59.92 x 3.53
55.0	70.1	6.3	RG4300550	59.69 x 5.33
56.0	**66.7**	**4.2**	**RG4500560**	**59.92 x 3.53**
56.0	**71.1**	**6.3**	**RG4300560**	**62.87 x 5.33**
58.0	73.1	6.3	RG4300580	62.87 x 5.33
60.0	70.7	4.2	RG4500600	63.09 x 3.53
60.0	75.1	6.3	RG4300600	66.04 x 5.33
63.0	**73.7**	**4.2**	**RG4500630**	**66.27 x 3.53**
63.0	**78.1**	**6.3**	**RG4300630**	**69.22 x 5.33**
65.0	80.1	6.3	RG4300650	69.22 x 5.33
67.0	77.7	4.2	RG4500670	72.62 x 3.53
70.0	**80.7**	**4.2**	**RG4500700**	**75.79 x 3.53**
70.0	**85.1**	**6.3**	**RG4300700**	**75.57 x 5.33**
72.0	82.7	4.2	RG4500720	75.79 x 3.53
75.0	85.7	4.2	RG4500750	78.97 x 3.53
75.0	90.1	6.3	RG4300750	81.92 x 5.33

Rod Dia. d_N f8/h9	Groove Dia. D_1 H9	Groove Width L_1 +0.2	TSS Part No.	O-Ring Size
80.0	**90.7**	**4.2**	**RG4500800**	**85.32 x 3.53**
80.0	**95.1**	**6.3**	**RG4300800**	**85.09 x 5.33**
83.0	93.7	4.2	RG4500830	88.49 x 3.53
85.0	100.1	6.3	RG4300850	91.44 x 5.33
86.0	96.7	4.2	RG4500860	91.67 x 3.53
90.0	**100.7**	**4.2**	**RG4500900**	**94.84 x 3.53**
90.0	**105.1**	**6.3**	**RG4300900**	**94.62 x 5.33**
92.0	102.7	4.2	RG4500920	98.02 x 3.53
95.0	105.7	4.2	RG4500950	101.19 x 3.53
95.0	110.1	6.3	RG4300950	100.97 x 5.33
100.0	**110.7**	**4.2**	**RG4501000**	**104.37 x 3.53**
100.0	**115.1**	**6.3**	**RG4301000**	**107.32 x 5.33**
101.6	112.3	4.2	RG4501016	107.54 x 3.53
101.6	116.7	6.3	RG4301016	107.32 x 5.33
104.7	119.8	6.3	RG4301047	110.49 x 5.33
105.0	115.7	4.2	RG4501050	110.72 x 3.53
105.0	120.1	6.3	RG4301050	110.49 x 5.33
110.0	**120.7**	**4.2**	**RG4501100**	**113.89 x 3.53**
110.0	**125.1**	**6.3**	**RG4301100**	**116.84 x 5.33**
110.0	**130.5**	**8.1**	**RG4101100**	**116.84 x 7.00**
112.0	127.1	6.3	RG4301120	116.84 x 5.33
115.0	125.7	4.2	RG4501150	120.24 x 3.53
115.0	130.1	6.3	RG4301150	120.02 x 5.33
118.0	133.1	6.3	RG4301180	123.19 x 5.33
120.0	130.7	4.2	RG4501200	123.42 x 3.53
120.0	135.1	6.3	RG4301200	126.37 x 5.33
125.0	**135.7**	**4.2**	**RG4501250**	**129.77 x 3.53**
125.0	**140.1**	**6.3**	**RG4301250**	**129.54 x 5.33**
129.0	139.7	4.2	RG4501290	132.94 x 3.53
130.0	140.7	4.2	RG4501300	136.12 x 3.53
130.0	145.1	6.3	RG4301300	135.89 x 5.33
135.0	145.7	4.2	RG4501350	139.29 x 3.53
135.0	150.1	6.3	RG4301350	142.24 x 5.33
140.0	**150.7**	**4.2**	**RG4501400**	**145.64 x 3.53**
140.0	**155.1**	**6.3**	**RG4301400**	**145.42 x 5.33**
145.0	155.7	4.2	RG4501450	148.82 x 3.53
145.0	160.1	6.3	RG4301450	151.77 x 5.33
150.0	165.1	6.3	RG4301500	158.12 x 5.33
160.0	**175.1**	**6.3**	**RG4301600**	**164.47 x 5.33**
160.0	**180.5**	**8.1**	**RG4101600**	**170.82 x 7.00**

Rod Dia. d_N f8/h9	Groove Dia. D_1 H9	Groove Width L_1 +0.2	TSS Part No.	O-Ring Size
165.0	180.1	6.3	RG4301650	170.82 x 5.33
170.0	180.7	4.2	RG4501700	177.39 x 3.53
170.0	185.1	6.3	RG4301700	177.17 x 5.33
175.0	190.1	6.3	RG4301750	183.52 x 5.33
180.0	**190.7**	**4.2**	**RG4501800**	**183.74 x 3.53**
180.0	**195.1**	**6.3**	**RG4301800**	**183.52 x 5.33**
180.0	**200.5**	**8.1**	**RG4101800**	**189.87 x 7.00**
190.0	200.7	4.2	RG4501900	196.44 x 3.53
190.0	205.1	6.3	RG4301900	196.22 x 5.33
200.0	**215.1**	**6.3**	**RG4502000**	**208.92 x 5.33**
200.0	**220.5**	**8.1**	**RG4302000**	**208.90 x 7.00**
205.0	220.1	6.3	RG4502050	208.92 x 5.33
210.0	225.1	6.3	RG4502100	215.27 x 5.33
220.0	**235.1**	**6.3**	**RG4502200**	**227.97 x 5.33**
220.0	**240.5**	**8.1**	**RG4302200**	**227.97 x 7.00**
230.0	245.1	6.3	RG4502300	234.32 x 5.33
230.0	250.5	8.1	RG4302300	240.67 x 7.00
240.0	255.1	6.3	RG4502400	247.02 x 5.33
240.0	260.5	8.1	RG4302400	253.37 x 7.00
250.0	**270.5**	**8.1**	**RG4302500**	**266.07 x 7.00**
260.0	284.0	8.1	RG4302600	266.07 x 7.00
270.0	294.0	8.1	RG4302700	278.77 x 7.00
270.0	290.5	8.1	RG4502700	278.77 x 7.00
275.0	299.0	8.1	RG4302750	291.47 x 7.00
280.0	**304.0**	**8.1**	**RG4302800**	**291.47 x 7.00**
280.0	**300.5**	**8.1**	**RG4502800**	**291.47 x 7.00**
290.0	314.0	8.1	RG4302900	304.17 x 7.00
290.0	310.5	8.1	RG4502900	304.17 x 7.00
300.0	324.0	8.1	RG4303000	316.87 x 7.00
310.0	334.0	8.1	RG4303100	316.87 x 7.00
310.0	330.5	8.1	RG4503100	316.87 x 7.00
320.0	**344.0**	**8.1**	**RG4303200**	**329.57 x 7.00**
330.0	354.0	8.1	RG4303300	342.27 x 7.00
340.0	364.0	8.1	RG4303400	354.97 x 7.00
350.0	374.0	8.1	RG4303500	367.67 x 7.00
350.0	370.5	8.1	RG4503500	354.97 x 7.00
360.0	**384.0**	**8.1**	**RG4303600**	**367.67 x 7.00**
370.0	394.0	8.1	RG4303700	380.37 x 7.00
370.0	390.5	8.1	RG4503700	380.37 x 7.00
380.0	404.0	8.1	RG4303800	393.07 x 7.00

Rod Dia. d_N f8/h9	Groove Dia. D_1 H9	Groove Width L_1 +0.2	TSS Part No.	O-Ring Size
390.0	414.0	8.1	RG4303900	405.26 x 7.00
400.0	424.0	8.1	RG4304000	417.96 x 7.00
400.0	420.5	8.1	RG4504000	405.26 x 7.00
410.0	434.0	8.1	RG4304100	417.96 x 7.00
420.0	444.0	8.1	RG4304200	430.66 x 7.00
430.0	454.0	8.1	RG4304300	443.36 x 7.00
440.0	464.0	8.1	RG4304400	456.06 x 7.00
450.0	474.0	8.1	RG4304500	468.76 x 7.00
460.0	484.0	8.1	RG4304600	468.76 x 7.00
470.0	494.0	8.1	RG4304700	481.38 x 7.00
480.0	504.0	8.1	RG4304800	494.16 x 7.00
490.0	514.0	8.1	RG4304900	506.86 x 7.00
500.0	524.0	8.1	RG4305000	506.86 x 7.00
510.0	534.0	8.1	RG4305100	532.26 x 7.00
520.0	544.0	8.1	RG4305200	532.26 x 7.00
530.0	554.0	8.1	RG4305300	557.66 x 7.00
540.0	564.0	8.1	RG4305400	557.66 x 7.00
550.0	574.0	8.1	RG4305500	557.66 x 7.00
560.0	584.0	8.1	RG4305600	582.68 x 7.00
570.0	594.0	8.1	RG4305700	582.68 x 7.00
570.0	594.0	8.1	RG4305700	582.68 x 7.00
580.0	604.0	8.1	RG4305800	608.08 x 7.00
590.0	614.0	8.1	RG4305900	608.08 x 7.00
600.0	624.0	8.1	RG4306000	608.08 x 7.00
610.0	634.0	8.1	RG4306100	633.48 x 7.00
620.0	644.0	8.1	RG4306200	633.48 x 7.00
630.0	654.0	8.1	RG4306300	658.88 x 7.00
640.0	664.0	8.1	RG4306400	658.88 x 7.00
650.0	677.3	9.5	RG4306500	663.00 x 8.40
660.0	687.3	9.5	RG4306600	673.00 x 8.40
670.0	697.3	9.5	RG4306700	683.00 x 8.40
680.0	707.3	9.5	RG4306800	693.00 x 8.40
688.0	715.3	9.5	RG4306880	701.00 x 8.40
690.0	717.3	9.5	RG4306900	703.00 x 8.40
700.0	724.0	8.1	RG4507000	712.00 x 7.00
710.0	737.3	9.5	RG4307100	723.00 x 8.40
740.0	767.3	9.5	RG4307400	753.00 x 8.40
760.0	784.0	8.1	RG4507600	772.00 x 7.00
770.0	797.3	9.5	RG4307700	783.00 x 8.40
800.0	827.3	9.5	RG4308000	813.00 x 8.40

Rod Dia. d_N f8/h9	Groove Dia. D_1 H9	Groove Width L_1 +0.2	TSS Part No.	O-Ring Size
850.0	877.3	9.5	RG4308500	863.00 x 8.40
870.0	897.3	9.5	RG4308700	883.00 x 8.40
900.0	927.3	9.5	RG4309000	913.00 x 8.40
910.0	937.3	9.5	RG4309100	923.00 x 8.40
950.0	977.3	9.5	RG4309500	963.00 x 8.40
960.0	987.3	9.5	RG4309600	973.00 x 8.40
1000.0	1027.3	9.5	RG45X1000	1013.00 x 8.40
1000.0	1038.0	13.8	RG43X1000	1016.00 x 12.00
1050.0	1077.3	9.5	RG45X1050	1063.00 x 8.40
1050.0	1088.0	13.8	RG43X1050	1066.00 x 12.00
1100.0	1138.0	13.8	RG43X1100	1116.00 x 12.00
1160.0	1187.3	9.5	RG45X1160	1173.00 x 8.40
1200.0	1227.3	9.5	RG45X1200	1213.00 x 8.40
1200.0	1238.0	13.8	RG43X1200	1216.00 x 12.00
1300.0	1327.3	9.5	RG45X1300	1313.00 x 8.40
1300.0	1338.0	13.8	RG43X1300	1316.00 x 12.00
1500.0	1527.3	9.5	RG45X1500	1513.00 x 8.40
1500.0	1538.0	13.8	RG43X1500	1516.00 x 12.00
1600.0	1638.0	13.8	RG43X1600	1616.00 x 12.00
2000.0	2038.0	13.8	RG43X2000	2016.00 x 12.00
2600.0	2638.0	13.8	RG43X2600	2616.00 x 12.00

The rod diameters in **bold** type are in accordance with the recommendations of ISO 3320.

Other dimensions and all intermediate sizes up to 2600 mm diameter, including imperial (inch) sizes converted to mm, can be supplied.

All O-Rings with 12 mm cross section are delivered as special profile ring.

Turcon® Glyd Ring® T

Double-acting

Rubber-energized plastic-faced seal

Material:
Turcon®, Zurcon® and Elastometer

Turcon® Glyd Ring® T*

■ Description

Turcon® Glyd Ring® T is a further technical development of Turcon® Glyd Ring® . It is fully interchangeable with earlier Glyd Ring® seals in all new applications.

The main benefits of the patented seal are provided by the innovative functional principle of the trapezoidal profile cross section. The sides of the seal profile tapers towards the seal surface. The profile can thus retain the robust and compact form typical of piston seals without losing any of the flexibility required to achieve a pressure-related maximum compression - Figure 78.

The edge angle of Glyd Ring® T permits an additional degree of freedom and enables a slight tilting movement of the seal. The maximum compression is thus always shifted towards the area of the seal edge directly exposed to the pressure.

On the low-pressure edge of the seal, Glyd Ring® T exhibits only zones with neutral strains without compressive or shearing loads, thus effectively reducing the danger of gap extrusion. The resulting benefits are as follows below.

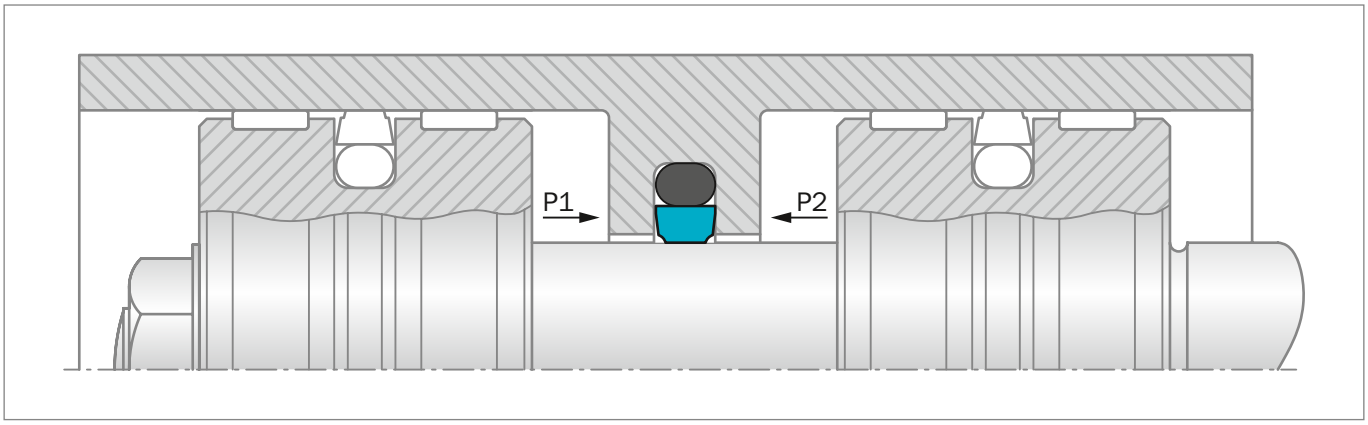

Figure 78: Turcon® Glyd Ring® T

ADVANTAGES

- Very good static sealing performance
- Increased clearance possible (approximately +50%), depending on the operating conditions
- Low friction, no stick-slip effect
- Simple groove design
- Fits standard Stepseal® groove dimensions as well as ISO 7425-2 seal housing
- Adaptable to the operating conditions due to a wide range of materials (Turcon® , Zurcon®)
- Suitable for environmentally friendly hydraulic fluids
- Available for all rod diameters up to 2600 mm

* Patent-No.:

DE	41 40833 C3
EP	0 582 593
Japan	2 799 367
USA	5,433,452

APPLICATION EXAMPLES

Glyd Ring® T is the recommended sealing element for double acting inside sealing seal for hydraulic components such as:

- Injection molding machines
- Machine tools
- Presses
- Handling machinery
- Servo equipment
- Agriculture
- Valves.

It is particularly recommended for heavy duty and large diameter applications.

OPERATING CONDITIONS

Pressure:	Up to 60 MPa
Speed:	Up to 15 m/s
Frequency:	Up to 5 Hz.
Temperature:	-45 °C to +200 °C depending on O-Ring material
Media:	Mineral oil-based hydraulic fluids, flame retardant hydraulic fluids, environmentally friendly hydraulic fluids (bio-oils), phosphate ester, water, air and others, depending on the seal and O-Ring material compatibility see Table 61.
Clearance:	The maximum permissible radial clearance S_{max} is shown in Table 62 as a function of the operating pressure and functional diameter.

IMPORTANT NOTE

The above data are maximum values and cannot be used at the same time, e.g. the maximum operating speed depends on material type, pressure, temperature and gap value. Temperature range also depends on media.

SERIES

Different cross section sizes are recommended as a function of the seal diameters.

Table 60 shows the relationship between the series number according to the seal diameter range and the different application class sizes.

Standard application:	General applications without exceptional operating conditions.
Light application:	Applications with demands for reduced friction or for smaller grooves.
Heavy-duty application:	For exceptional operating loads such as high pressures, pressure peaks, etc.

Table 60: Available Range

Series No.	Rod Diameter d_N f8/h9
RT00	2.0 - 130.0
RT01	4.0 - 240.0
RT02	6.0 - 450.0
RT03	12.0 - 650.0
RT04	38.0 - 650.0
RT08	200.0 - 999.9
RT05	256.0 - 999.9
RT05X	1000.0 - 1200.0
RT06	650.0 - 999.9
RT06X	1000.0 - 2600.0

For the recommended Standard Application range see Table 62.

INSTALLATION INSTRUCTIONS

Glyd Ring® T is installed according to information on page 31 to 32.

Closed groove installation applies same dimensions as for Turcon® Stepseal® 2K in Table 6 page 32.

RECOMMENDED MATERIALS

The following material combinations have proven effective for hydraulic applications:

Turcon® Glyd Ring® T in Turcon® M12
All round material for light to heavy hydraulic applications with linear or helical movements in mineral oils, flame retardant hydraulic fluids, phosphate ester, bio-oils or fluids having low lubricating properties:

O-Ring:	NBR 70 Shore A	N
	FKM 70 Shore A	V

Set code: M12N or M12V

Turcon® Glyd Ring® T in Turcon® T46
For medium to heavy applications with linear movements in mineral oils and other media with good lubrication:

O-Ring:	NBR 70 Shore A	N
	FKM 70 Shore A	V

Set code: T46N or T46V

For specific applications, all Turcon® materials are available. Other material combinations are listed in Table 61.

Table 61: Turcon® and Zurcon® Materials for Glyd Ring® T

Material, Applications, Properties	Code	O-Ring Material Shore A	Code	O-Ring Operating Temp.* °C	Mating Surface Material	MPa max. Dynamic
Turcon® M12 First material choice for seals in linear motion Overall improved properties For new constructions and updating For all commonly applied hydraulic fluids including fluids with low lubrication performance Lowest friction and best sliding properties Lowest wear on seals Improved absorption of abrasive contaminants Low wear or abrasion of counter surface BAM tested Mineral fiber an Additives filled Color: Dark gray	M12	NBR 70	N	-30 to +100	Steel Steel hardened Steel chrome plated (rod) Steel plated (rod) Cast iron Stainless steel Titanium	40
		NBR 70 Low temp.	T	-45 to +80		
		FKM 70	V	-10 to +200		
Turcon® T40 For lubricating and non-lubricating fluids **Water hydraulics** Surface texture is not suitable for gas sealing Carbon fiber filled Color: Gray	T40	NBR 70	N	-30 to +100	Steel Steel hardened Steel chrome plated (rod) Cast iron Stainless steel Aluminum	25
		NBR 70 Low temp.	T	-45 to +80		
		FKM 70	V	-10 to +200		
		EPDM 70	E**	-45 to +145		
Turcon® T46 For lubricated hydraulics in linear motion High compressive strength High extrusion resistance Very good sliding and wear properties BAM tested Bronze filled Color: Light to dark brown, which may have variations in shading.	T46	NBR 70	N	-30 to +100	Steel hardened Steel chrome plated (rod) Cast iron	50
		NBR 70 Low temp.	T	-45 to +80		
		FKM 70	V	-10 to +200		
Zurcon® Z51*** For mineral oil based fluids **Very high abrasion and extrusion resistance** For counter surface with rougher surface finish Hard to install Limited chemical resistance Max. working temperature +110 °C Cast polyurethane Color: Yellow to light-brown	Z51	NBR 70	N	-30 to +100	Steel Steel hardened Steel chrome plated (rod) Cast iron Stainless steel Ceramic coating	60
		NBR 70 Low temp.	T	-45 to +80		

Table continues on next page

Material, Applications, Properties	Code	O-Ring Material Shore A	Code	O-Ring Operating Temp.* °C	Mating Surface Material	MPa max. Dyna-mic
Zurcon® Z80 For lubricating and non-lubricating fluids Water based fluids, air and gases Dry air pneumatics High abrasion and extrusion resistance For service in abrasive conditions and media with particles Good chemical resistance Limited temperature capability (-60 to +80 °C) UHMWPE (Ultra High Molecular Weight Polyethylene) Color: White to off-white	Z80	NBR 70	N	-30 to (+100)	Steel Steel hardened Steel chrome plated (rod) Stainless steel Aluminum Ceramic coating	35
		NBR 70 Low temp.	T	-45 to +80		
		EPDM 70	E**	-45 to (+145)		

* The O-Ring Operation Temperature is only valid in mineral hydraulic oil (except EPDM).

** Material not suitable for mineral oils.

*** Max. diameter 2200 mm

BAM: Tested by "Bundesanstalt Materialprüfung, Germany"

Highlighted materials are recommended.

Installation Recommendation

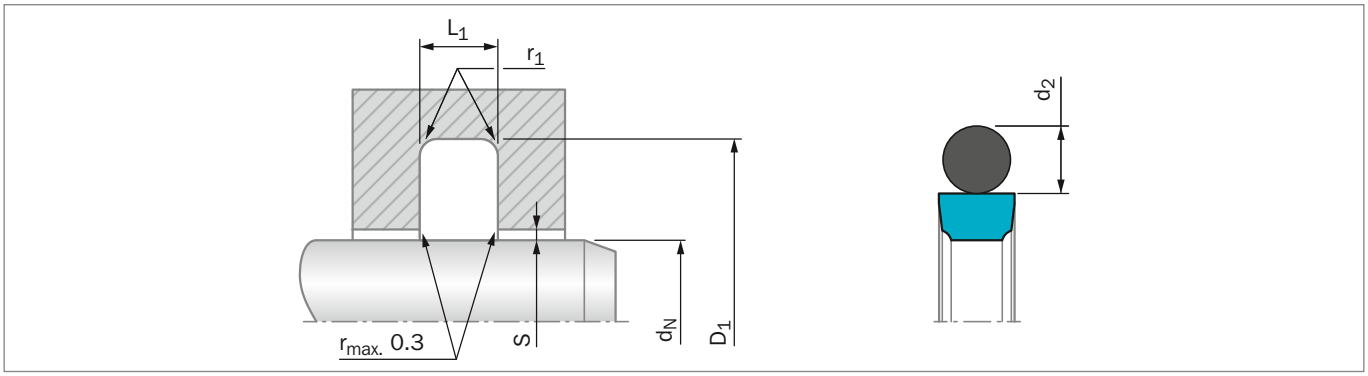

Figure 79: Installation Drawing

Table 62: Installation Dimensions – Standard Recommendations

Series No.	Rod Diameter d_N f8/h9			Groove Diameter*	Groove Width	Radius	Radial Clearance S_{max}**			O-Ring Cross Section
	Standard Application	Light Application	Heavy Duty Application	D_1 H9	L_1 +0.2	$r_{1\,max}$	10 MPa	20 MPa	40 MPa	d_2
RT00	3 - 7.9	8 - 18.9	-	d_N + 4.9	2.2	0.4	0.40	0.30	0.20	1.78
RT01	8 - 18.9	19 - 37.9	-	d_N + 7.3	3.2	0.6	0.60	0.50	0.30	2.62
RT02	19 - 37.9	38 - 199.9	8 - 18.9	d_N + 10.7	4.2	1.0	0.70	0.50	0.30	3.53
RT03	38 - 199.9	200 - 255.9	19 - 37.9	d_N + 15.1	6.3	1.3	0.80	0.60	0.40	5.33
RT04	200 - 255.9	256 - 649.9	38 - 199.9	d_N + 20.5	8.1	1.8	0.80	0.60	0.40	7.00
RT08	256 - 649.9	650 - 999.9	200 - 255.9	d_N + 24.0	8.1	1.8	0.90	0.70	0.50	7.00
RT05	650 - 999.9	-	256 - 649.9	d_N + 27.3	9.5	2.5	1.00	0.80	0.60	8.40
RT05X	-	1000 - 1200	-	d_N + 27.3	9.5	2.5	1.00	0.80	0.60	8.40
RT06***	-	-	650 - 999.9	d_N + 38.0	13.8	3.0	1.20	0.90	0.70	12.00
RT06X***	1000 - 2600	-	-	d_N + 38.0	13.8	3.0	1.20	0.90	0.70	12.00

* Installation with groove dimensions to ISO 7425-2 is also recommendable.
** At pressures > **40 MPa** use diameter tolerance H8/f8 (bore/rod) in the area of the seal or consult your local Trelleborg Sealing Solutions marketing company for alternative material or profiles.
Slydring® / Wear Rings are not applicable at very small radial clearances please consult the Slydring® section in this catalog.
*** O-Rings with 12 mm cross section are delivered as special profile ring.

ORDERING EXAMPLE

Turcon® Glyd Ring® T complete with O-Ring, standard application:

Series:	RT03 from Table 62
Rod diameter:	dN = 80.0 mm
TSS Part No.:	RT0300800 from Table 63

Select the material from Table 61. The corresponding code numbers are appended to the TSS Part No. Together these form the TSS Article Number. The TSS Article Number for all intermediate sizes can be determined by following the example.

TSS Article No. **RT03 0 0800 - M12 N**

- Series No. — RT03
- Type (Standard) — 0
- Rod Diameter x 10**** — 0800
- Quality Index (Standard) — -
- Material Code (Seal Ring) — M12
- Material Code (O-Ring) — N

**** For diameters $d_N \geq 1000.0$ mm multiply only by factor 1.
Example: RT06 for diameter d_N = 1200.0 mm
TSS Article No.: RT06**X1200** - M12N

Table 63: Installation Dimensions / TSS Part No.

Rod Dia. d_N f8/h9	Groove Dia. D_1 H9	Groove Width L_1 +0.2	TSS Part No.	O-Ring Size
3.0	7.9	2.2	RT0000030	4.80 x 1.80
4.0	**8.9**	**2.2**	**RT0000040**	**5.60 x 1.80**
5.0	**9.9**	**2.2**	**RT0000050**	**6.70 x 1.80**
6.0	**10.9**	**2.2**	**RT0000060**	**7.65 x 1.78**
7.0	11.9	2.2	RT0000070	8.75 x 1.80
8.0	**12.9**	**2.2**	**RT0000080**	**9.50 x 1.80**
8.0	**15.3**	**3.2**	**RT0100080**	**10.77 x 2.62**
10.0	**14.9**	**2.2**	**RT0000100**	**11.80 x 1.80**
10.0	**17.3**	**3.2**	**RT0100100**	**12.37 x 2.62**
12.0	**16.9**	**2.2**	**RT0000120**	**14.00 x 1.78**
12.0	**19.3**	**3.2**	**RT0100120**	**14.50 x 2.65**
14.0	**18.9**	**2.2**	**RT0000140**	**15.60 x 1.78**
14.0	**21.3**	**3.2**	**RT0100140**	**17.12 x 2.62**
15.0	19.9	2.2	RT0000150	17.17 x 1.78
15.0	22.3	3.2	RT0100150	18.00 x 2.65
16.0	**20.9**	**2.2**	**RT0000160**	**17.17 x 1.78**
16.0	**23.3**	**3.2**	**RT0100160**	**18.72 x 2.62**
18.0	**22.9**	**2.2**	**RT0000180**	**20.35 x 1.78**
18.0	**25.3**	**3.2**	**RT0100180**	**20.29 x 2.62**
19.0	29.7	4.2	RT0200190	23.40 x 3.53
20.0	**27.3**	**3.2**	**RT0100200**	**21.89 x 2.62**
20.0	**30.7**	**4.2**	**RT0200200**	**25.00 x 3.53**
22.0	**29.3**	**3.2**	**RT0100220**	**25.07 x 2.62**
22.0	**32.7**	**4.2**	**RT0200220**	**26.58 x 3.53**
24.0	31.3	3.2	RT0100240	26.64 x 2.62
25.0	**32.3**	**3.2**	**RT0100250**	**28.24 x 2.62**
25.0	**35.7**	**4.2**	**RT0200250**	**29.75 x 3.53**
25.4	32.7	3.2	RT0100254	28.24 x 2.62
25.4	36.1	4.2	RT0200254	29.75 x 3.53
26.0	33.3	3.2	RT0100260	28.24 x 2.62
26.0	36.7	4.2	RT0200260	29.75 x 3.53
27.0	34.3	3.2	RT0100270	29.82 x 2.62
28.0	**35.3**	**3.2**	**RT0100280**	**29.82 x 2.62**
28.0	**38.7**	**4.2**	**RT0200280**	**32.92 x 3.53**
28.575	35.875	3.2	RT0100286	31.42 x 2.62
29.0	36.3	3.2	RT0100290	31.42 x 2.62
30.0	37.3	3.2	RT0100300	32.99 x 2.62
30.0	40.7	4.2	RT0200300	34.52 x 3.53
32.0	**39.3**	**3.2**	**RT0100320**	**34.59 x 2.62**
32.0	**42.7**	**4.2**	**RT0200320**	**36.09 x 3.53**

Rod Dia. d_N f8/h9	Groove Dia. D_1 H9	Groove Width L_1 +0.2	TSS Part No.	O-Ring Size
35.0	42.3	3.2	RT0100350	37.77 x 2.62
35.0	45.7	4.2	RT0200350	37.69 x 3.53
36.0	**43.3**	**3.2**	**RT0100360**	**39.34 x 2.62**
36.0	**46.7**	**4.2**	**RT0200360**	**40.87 x 3.53**
38.0	48.7	4.2	RT0200380	40.87 x 3.53
38.0	53.1	6.3	RT0300380	43.82 x 5.33
39.0	49.7	4.2	RT0200390	44.04 x 3.53
40.0	**50.7**	**4.2**	**RT0200400**	**44.04 x 3.53**
40.0	**55.1**	**6.3**	**RT0300400**	**43.82 x 5.33**
42.0	52.7	4.2	RT0200420	47.22 x 3.53
42.0	57.1	6.3	RT0300420	46.99 x 5.33
44.0	54.7	4.2	RT0200440	47.22 x 3.53
44.4	59.5	6.3	RT0300444	50.17 x 5.33
45.0	**55.7**	**4.2**	**RT0200450**	**50.39 x 3.53**
45.0	**60.1**	**6.3**	**RT0300450**	**50.17 x 5.33**
48.0	58.7	4.2	RT0200480	53.57 x 3.53
48.0	63.1	6.3	RT0300480	53.34 x 5.33
50.0	**60.7**	**4.2**	**RT0200500**	**53.57 x 3.53**
50.0	**65.1**	**6.3**	**RT0300500**	**56.52 x 5.33**
50.8	61.5	4.2	RT0200508	53.57 x 3.53
50.8	65.9	6.3	RT0300508	56.52 x 5.33
52.0	62.7	4.2	RT0200520	56.74 x 3.53
52.0	67.1	6.3	RT0300520	56.52 x 5.33
54.0	69.1	6.3	RT0300540	59.69 x 5.33
55.0	65.7	4.2	RT0200550	59.92 x 3.53
55.0	70.1	6.3	RT0300550	59.69 x 5.33
56.0	**66.7**	**4.2**	**RT0200560**	**59.92 x 3.53**
56.0	**71.1**	**6.3**	**RT0300560**	**62.87 x 5.33**
58.0	73.1	6.3	RT0300580	62.87 x 5.33
60.0	70.7	4.2	RT0200600	63.09 x 3.53
60.0	75.1	6.3	RT0300600	66.04 x 5.33
63.0	**73.7**	**4.2**	**RT0200630**	**66.27 x 3.53**
63.0	**78.1**	**6.3**	**RT0300630**	**69.22 x 5.33**
65.0	80.1	6.3	RT0300650	69.22 x 5.33
67.0	77.7	4.2	RT0200670	72.62 x 3.53
70.0	**80.7**	**4.2**	**RT0200700**	**75.79 x 3.53**
70.0	**85.1**	**6.3**	**RT0300700**	**75.57 x 5.33**
72.0	82.7	4.2	RT0200720	75.79 x 3.53
75.0	85.7	4.2	RT0200750	78.97 x 3.53
75.0	90.1	6.3	RT0300750	81.92 x 5.33

Rod Dia. d_N f8/h9	Groove Dia. D_1 H9	Groove Width L_1 +0.2	TSS Part No.	O-Ring Size
80.0	**90.7**	**4.2**	**RT0200800**	**85.32 x 3.53**
80.0	**95.1**	**6.3**	**RT0300800**	**85.09 x 5.33**
83.0	93.7	4.2	RT0200830	88.49 x 3.53
85.0	100.1	6.3	RT0300850	91.44 x 5.33
86.0	96.7	4.2	RT0200860	91.67 x 3.53
90.0	**100.7**	**4.2**	**RT0200900**	**94.84 x 3.53**
90.0	**105.1**	**6.3**	**RT0300900**	**94.62 x 5.33**
92.0	102.7	4.2	RT0200920	98.02 x 3.53
95.0	105.7	4.2	RT0200950	101.19 x 3.53
95.0	110.1	6.3	RT0300950	100.97 x 5.33
100.0	**110.7**	**4.2**	**RT0201000**	**104.37 x 3.53**
100.0	**115.1**	**6.3**	**RT0301000**	**107.32 x 5.33**
101.6	112.3	4.2	RT0201016	107.54 x 3.53
101.6	116.7	6.3	RT0301016	107.32 x 5.33
104.7	119.8	6.3	RT0301047	110.49 x 5.33
105.0	115.7	4.2	RT0201050	110.72 x 3.53
105.0	120.1	6.3	RT0301050	110.49 x 5.33
110.0	**120.7**	**4.2**	**RT0201100**	**113.89 x 3.53**
110.0	**125.1**	**6.3**	**RT0301100**	**116.84 x 5.33**
110.0	**130.5**	**8.1**	**RT0401100**	**120.02 x 7.00**
112.0	127.1	6.3	RT0301120	116.84 x 5.33
115.0	125.7	4.2	RT0201150	120.24 x 3.53
115.0	130.1	6.3	RT0301150	120.02 x 5.33
118.0	133.1	6.3	RT0301180	123.19 x 5.33
120.0	130.7	4.2	RT0201200	123.42 x 3.53
120.0	135.1	6.3	RT0301200	126.37 x 5.33
125.0	**135.7**	**4.2**	**RT0201250**	**129.77 x 3.53**
125.0	**140.1**	**6.3**	**RT0301250**	**129.54 x 5.33**
129.0	139.7	4.2	RT0201290	132.94 x 3.53
130.0	140.7	4.2	RT0201300	136.12 x 3.53
130.0	145.1	6.3	RT0301300	135.89 x 5.33
135.0	145.7	4.2	RT0201350	139.29 x 3.53
135.0	150.1	6.3	RT0301350	142.24 x 5.33
140.0	**150.7**	**4.2**	**RT0201400**	**145.64 x 3.53**
140.0	**155.1**	**6.3**	**RT0301400**	**145.42 x 5.33**
145.0	155.7	4.2	RT0201450	148.82 x 3.53
145.0	160.1	6.3	RT0301450	151.77 x 5.33
150.0	165.1	6.3	RT0301500	158.12 x 5.33
160.0	**175.1**	**6.3**	**RT0301600**	**164.47 x 5.33**
160.0	**180.5**	**8.1**	**RT0401600**	**170.82 x 7.00**

Rod Dia. d_N f8/h9	Groove Dia. D_1 H9	Groove Width L_1 +0.2	TSS Part No.	O-Ring Size
165.0	180.1	6.3	RT0301650	170.82 x 5.33
170.0	180.7	4.2	RT0201700	177.39 x 3.53
170.0	185.1	6.3	RT0301700	177.17 x 5.33
175.0	190.1	6.3	RT0301750	183.52 x 5.33
180.0	**190.7**	**4.2**	**RT0201800**	**183.74 x 3.53**
180.0	**195.1**	**6.3**	**RT0301800**	**183.52 x 5.33**
180.0	**200.5**	**8.1**	**RT0401800**	**189.87 x 7.00**
190.0	200.7	4.2	RT0201900	196.44 x 3.53
190.0	205.1	6.3	RT0301900	196.22 x 5.33
200.0	**215.1**	**6.3**	**RT0302000**	**208.92 x 5.33**
200.0	**220.5**	**8.1**	**RT0402000**	**208.90 x 7.00**
205.0	220.1	6.3	RT0302050	208.92 x 5.33
210.0	225.1	6.3	RT0302100	215.27 x 5.33
220.0	235.1	6.3	RT0302200	227.97 x 5.33
220.0	**240.5**	**8.1**	**RT0402200**	**227.97 x 7.00**
230.0	245.1	6.3	RT0302300	234.32 x 5.33
230.0	250.5	8.1	RT0402300	240.67 x 7.00
240.0	255.1	6.3	RT0302400	247.02 x 5.33
240.0	260.5	8.1	RT0402400	253.37 x 7.00
250.0	**270.5**	**8.1**	**RT0402500**	**266.07 x 7.00**
260.0	284.0	8.1	RT0802600	266.07 x 7.00
270.0	290.5	8.1	RT0402700	278.77 x 7.00
270.0	294.0	8.1	RT0802700	278.77 x 7.00
275.0	299.0	8.1	RT0802750	291.47 x 7.00
280.0	**300.5**	**8.1**	**RT0402800**	**291.47 x 7.00**
280.0	**304.0**	**8.1**	**RT0802800**	**291.47 x 7.00**
290.0	310.5	8.1	RT0402900	304.17 x 7.00
290.0	314.0	8.1	RT0802900	304.17 x 7.00
300.0	324.0	8.1	RT0803000	316.87 x 7.00
310.0	330.5	8.1	RT0403100	316.87 x 7.00
310.0	334.0	8.1	RT0803100	316.87 x 7.00
320.0	**344.0**	**8.1**	**RT0803200**	**329.57 x 7.00**
330.0	354.0	8.1	RT0803300	342.27 x 7.00
340.0	364.0	8.1	RT0803400	354.97 x 7.00
350.0	370.5	8.1	RT0403500	354.97 x 7.00
350.0	374.0	8.1	RT0803500	367.67 x 7.00
360.0	**384.0**	**8.1**	**RT0803600**	**367.67 x 7.00**
370.0	390.5	8.1	RT0403700	380.37 x 7.00
370.0	394.0	8.1	RT0803700	380.37 x 7.00
380.0	404.0	8.1	RT0803800	393.07 x 7.00

Rod Dia. d_N f8/h9	Groove Dia. D_1 H9	Groove Width L_1 +0.2	TSS Part No.	O-Ring Size
390.0	414.0	8.1	RT0803900	405.26 x 7.00
400.0	420.5	8.1	RT0404000	405.26 x 7.00
400.0	424.0	8.1	RT0804000	417.96 x 7.00
410.0	434.0	8.1	RT0804100	417.96 x 7.00
420.0	444.0	8.1	RT0804200	430.66 x 7.00
430.0	454.0	8.1	RT0804300	443.36 x 7.00
440.0	464.0	8.1	RT0804400	456.06 x 7.00
450.0	474.0	8.1	RT0804500	468.76 x 7.00
460.0	484.0	8.1	RT0804600	468.76 x 7.00
470.0	494.0	8.1	RT0804700	481.38 x 7.00
480.0	504.0	8.1	RT0804800	494.16 x 7.00
490.0	514.0	8.1	RT0804900	506.86 x 7.00
500.0	524.0	8.1	RT0805000	506.86 x 7.00
510.0	534.0	8.1	RT0805100	532.26 x 7.00
520.0	544.0	8.1	RT0805200	532.26 x 7.00
530.0	554.0	8.1	RT0805300	557.66 x 7.00
540.0	564.0	8.1	RT0805400	557.66 x 7.00
550.0	574.0	8.1	RT0805500	557.66 x 7.00
560.0	584.0	8.1	RT0805600	582.68 x 7.00
570.0	594.0	8.1	RT0805700	582.68 x 7.00
580.0	604.0	8.1	RT0805800	608.08 x 7.00
590.0	614.0	8.1	RT0805900	608.08 x 7.00
600.0	624.0	8.1	RT0806000	608.08 x 7.00
610.0	634.0	8.1	RT0806100	633.48 x 7.00
620.0	644.0	8.1	RT0806200	633.48 x 7.00
630.0	654.0	8.1	RT0806300	658.88 x 7.00
640.0	664.0	8.1	RT0806400	658.88 x 7.00
650.0	677.3	9.5	RT0506500	663.00 x 8.40
660.0	687.3	9.5	RT0506600	673.00 x 8.40
670.0	697.3	9.5	RT0506700	683.00 x 8.40
680.0	707.3	9.5	RT0506800	693.00 x 8.40
688.0	715.3	9.5	RT0506880	701.00 x 8.40
690.0	717.3	9.5	RT0506900	703.00 x 8.40
700.0	724.0	8.1	RT0807000	721.00 x 7.00
710.0	737.3	9.5	RT0507100	723.00 x 8.40
740.0	767.3	9.5	RT0507400	753.00 x 8.40
760.0	784.0	8.1	RT0807600	772.00 x 7.00
770.0	797.3	9.5	RT0507700	783.00 x 8.40
800.0	827.3	9.5	RT0508000	813.00 x 8.40
850.0	877.3	9.5	RT0508500	863.00 x 8.40

Rod Dia. d_N f8/h9	Groove Dia. D_1 H9	Groove Width L_1 +0.2	TSS Part No.	O-Ring Size
870.0	897.3	9.5	RT0508700	883.00 x 8.40
900.0	927.3	9.5	RT0509000	913.00 x 8.40
910.0	937.3	9.5	RT0509100	923.00 x 8.40
950.0	977.3	9.5	RT0509500	963.00 x 8.40
960.0	987.3	9.5	RT0509600	973.00 x 8.40
1000.0	1027.3	9.5	RT05X1000	1013.00 x 8.40
1000.0	1038.0	13.8	RT06X1000	1016.00 x 12.00
1050.0	1077.3	9.5	RT05X1050	1063.00 x 8.40
1050.0	1088.0	13.8	RT06X1050	1066.00 x 12.00
1100.0	1138.0	13.8	RT06X1100	1116.00 x 12.00
1160.0	1187.3	9.5	RT05X1160	1173.00 x 8.40
1200.0	1227.3	9.5	RT05X1200	1213.00 x 8.40
1200.0	1238.0	13.8	RT06X1200	1216.00 x 12.00
1300.0	1338.0	13.8	RT06X1300	1316.00 x 12.00
1500.0	1538.0	13.8	RT06X1500	1516.00 x 12.00
1600.0	1638.0	13.8	RT06X1600	1616.00 x 12.00
2000.0	2038.0	13.8	RT06X2000	2016.00 x 12.00
2600.0	2638.0	13.8	RT06X2600	2616.00 x 12.00

The rod diameters in **bold** type are in accordance with the recommendations of ISO 3320.

Other dimensions and all intermediate sizes up to 2600 mm diameter, including imperial (inch) sizes converted to mm, can be supplied.

All O-Rings with 12 mm cross section are delivered as a special profile ring.

Turcon® Glyd Ring® Hz

Double-acting

Rubber-energized plastic-faced seal

Material:
Turcon®, Zurcon® and Elastomer

Turcon® Glyd Ring® Hz

Description

Glyd Ring® Hz is a symmetric single- and double-acting rod seal for applications with short-stroke high-frequency linear movements. It is designed to fit into ISO 7425-2 housing grooves.

Glyd Ring® Hz is wider than Turcon® Glyd Ring® giving a tighter fit in the housing groove and limiting its axial movement. It also prevents the seal from being damaged under short-stroke high-frequency movement. Furthermore it eliminates the risk of wear between O-Ring and seal.

Glyd Ring® Hz has notches on both sides to ensure system pressure can instantly activate the O-Ring under the seal despite the tighter fit and the fast alternation of pressure direction.

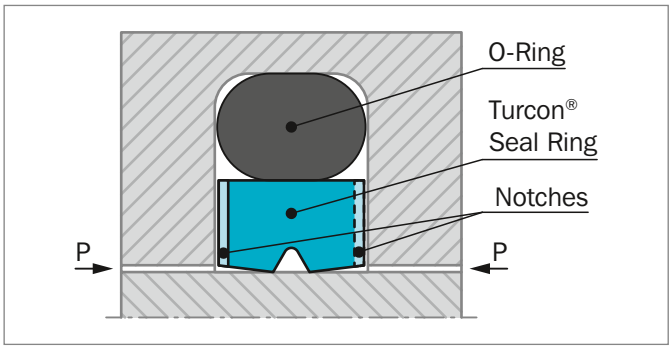

Figure 80: Turcon® Glyd Ring® Hz – short-stroke

The angled contact faces ensure that oil film is not scraped away from the surface but is transported into the groove in the middle of the contact area forming an oil reservoir for lubrication. Wear particles are also likely to be captured in this groove, thus preventing them from embedding in the surface where the highest contact force occurs.

DEFINITION

Short-stroke high-frequency movements are conditions, which in combination can cause problems in hydraulic systems:

Short-Stroke: ≤ 3 x G (Groove width).
Very short reciprocating movements can cause reduced service life due to insufficient lubrication film, giving an increasing temperature on a limited area. These factors increase wear on seal and hardware and wear particles will not be removed from the seal face.

High-Frequency: Reciprocating movement above 5 Hz.
With an increasing frequency the formation of lubrication under the contact face is reduced. High-frequency is most often occurring in connection with short-strokes. These two types of movements together accelerate the wear on hardware and seal.

ADVANTAGES

- Seal face gets lubricated in short-stroke high-frequency linear movements
- Low friction
- No stick-slip effect
- Single and double acting
- High wear resistance
- Installation grooves acc. to ISO 7425-2
- No adhesive effect to the mating surface during long period of inactivity or storage
- Available for all cylinder diameters up to 999.9 mm. (For diameter ≥ 1000 mm special part number is required)

APPLICATIONS EXAMPLES

Glyd Ring® Hz has been successfully implemented in a large variety of applications as double acting rod seal for hydraulic components such as:

- Injection molding machines
- Machine tools
- Press brakes
- Handling machinery
- Servo equipment
- Pressure intensifiers
- Shock absorbers
- Wind power pitch cylinders

OPERATING CONDITIONS

Pressure:	Up to 30 MPa with mineral oil depending on seal material
Speed:	Up to 15 m/s with linear movements
Frequency:	-45 °C to +200 °C depending on Seal and O-Ring material
Media:	Mineral oil and other fluids with very high lubricity depending on temperature, seal and O-Ring material compatibility
Clearance:	The maximum permissible radial clearance S_{max} is shown in Table 65 as a function of the operating pressure and functional diameter.

IMPORTANT NOTE

The above data are maximum values and cannot be used at the same time, e.g. the maximum operating speed depends on material type, pressure, temperature and gap value. Temperature range also depends on media.

HARDWARE

Short-stroke high-frequency can cause heavy wear on hardware due to poor lubrication under the seal and the fact that wear products cannot be removed from the contact area. The hardest possible hardware material should be recommended, especially when system pressure is above 10 MPa.

INSTALLATION INSTRUCTIONS

Glyd Ring® Hz is installed according to information on page 31 and 32.

Closed groove installation applies the same limits for diameter d_N as for Turcon® Stepseal® 2K in Table 6 page 32.

Tandem seal installation of Glyd Ring® Hz cannot be recommended as the short-strokes create a risk of pressure build-up between the seals.

When used as rod seal we recommend two possibilities, either one Glyd Ring® Hz and one Turcon® Excluder® 2 with drain in between - Figure 81 - or one Glyd Ring® Hz and a single-acting Turcon® Excluder® 1 - Figure 82.

All elements should be in one of the recommended materials.

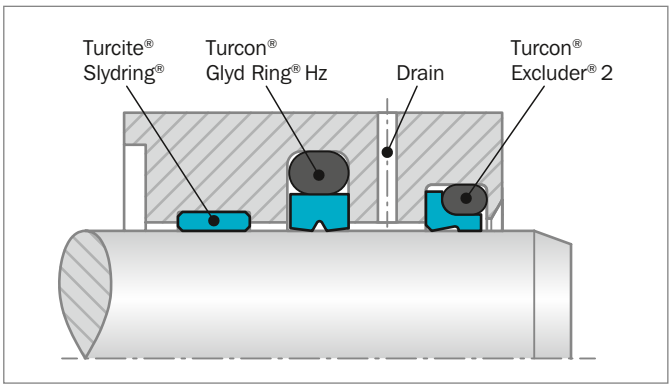

Figure 81: Glyd Ring® Hz with Turcon® Excluder® 2 and Turcite® Slydring®

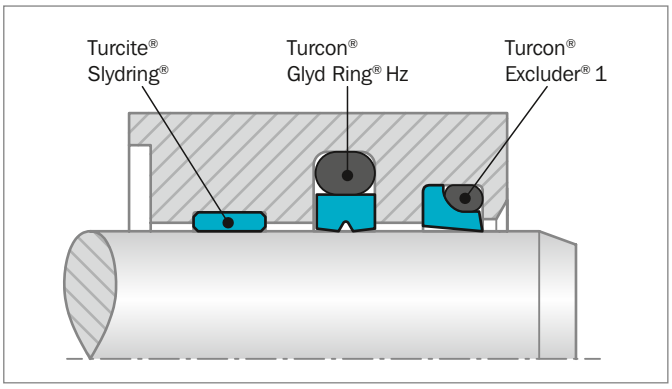

Figure 82: Glyd Ring® Hz with Turcon® Excluder® 1 and Turcite® Slydring®

RECOMMENDED MATERIALS

The following material combinations have proven effective for short-stroke and/or high-frequency applications:

Turcon® Glyd Ring® Hz in Turcon® M12
All round material for hydraulic applications with linear, short-stroke and /or high-frequency movements in mineral oils and fluids having high lubricating properties:

O-Ring:	NBR 70 Shore A	N
	FKM 70 Shore A	V
	depending on medium and temperature	
Set code:	M12N, M12V or M12E	

Turcon® Glyd Ring® Hz in Turcon® T49
For medium to heavy applications with linear, short-stroke and/ or high-frequency movements in mineral oils:

O-Ring:	NBR 70 Shore A	N
	FKM 70 Shore A	V
	depending on media and temperature	

Set code: T49N or T49V

Turcon® Glyd Ring® Hz in Turcon® T40
For light to medium applications with linear, short-stroke and/ or high-frequency movements in fluids with lower lubricating properties:

O-Ring:	NBR 70 Shore A	N
	FKM 70 Shore A	V
	EPDM 70 Shore A	E
	depending on media and temperature	

Set code: T40N, T40V or T40E

Zurcon® Glyd Ring® Hz in Zurcon® Z80
For light applications with linear, short-stroke and/or high-frequency movements in water based fluids, air and gases at reduced pressure and frequencies due to the temperature limitation of the material:

O-Ring:	NBR 70 Shore A	N
	EPDM 70 Shore A	E
	depending on media and temperature	

Set code: Z80N or Z80E

Table 64: Turcon® and Zurcon® Materials for Glyd Ring® Hz

Material, Applications, Properties	Code	O-Ring Material Shore A	Code	O-Ring Operating Temp.* °C	Mating Surface Material	MPa max. Dyna-mic
Turcon® M12 First material choice for seals in linear motion with high-frequency and short-strokes For new constructions and updating For commonly applied hydraulic fluids Lowest friction and best sliding properties Lowest wear on seals Improved absorption of abrasive contaminants Low wear or abrasion of counter surface BAM tested Mineral fiber and Additives filled Color: Dark gray	M12	NBR 70	N	-30 to +100	Steel Steel hardened Steel chrome plated (rod) Steel plated (rod) Cast iron Stainless steel Titanium	30
		NBR 70 Low temp.	T	-45 to +80		
		FKM 70	V	-10 to +200		
Turcon® T40 For lubricating fluids and fluids with lower lubrication performance Water hydraulics at reduced pressure and frequency Surface texture is only suitable for gas sealing when lubricated with fluid Carbon fiber filled Color: Gray	T40	NBR 70	N	-30 to +100	Steel Steel hardened Steel chrome plated (rod) Cast iron Stainless steel Aluminum	25
		NBR 70 Low temp.	T	-45 to +80		
		FKM 70	V	-10 to +200		
		EPDM-70	E**	-45 to +145		
Turcon® T49 For lubricated hydraulics in linear motion High compressive strength High extrusion resistance Very good sliding and wear properties Surface treated for very quick run-in BAM tested Bronze filled Color: Light to dark brown, which may have variations in shading.	T49	NBR 70	N	-30 to +100	Steel (tubes) Steel hardened Steel chrome plated (rod) Cast iron	30
		NBR 70 Low temp.	T	-45 to +80		
		FKM 70	V	-10 to +200		

Table continues on next page

Material, Applications, Properties	Code	O-Ring Material Shore A	Code	O-Ring Operating Temp.* °C	Mating Surface Material	MPa max. Dyna-mic
Zurcon® Z80 For low frequencies due to the temperature limitation of the material For lubricating fluids and fluids with lower lubrication performance Water based fluids, air and gases at reduced pressure Dry air pneumatics High abrasion and extrusion resistance For service in abrasive conditions and media with particles Good chemical resistance Limited temperature capability (-60 to +80 °C) UHMWPE (Ultra High Molecular Weight Polyethylene) Color: White to off-white	Z80	NBR 70	N	-30 to (+100)	Steel Steel hardened Steel chrome plated (rod) Stainless steel Aluminum Ceramic coating	25
		NBR 70 Low temp.	T	-45 to +80		
		EPDM 70	E**	-45 to (+145)		

* The O-Ring Operation Temperature is only valid in mineral hydraulic oil (except EPDM).

** Material not suitable for mineral oils.

BAM: Tested by "Bundes-anstalt Materialprüfung, Germany"

Highlighted materials are recommended.

Installation Recommendation

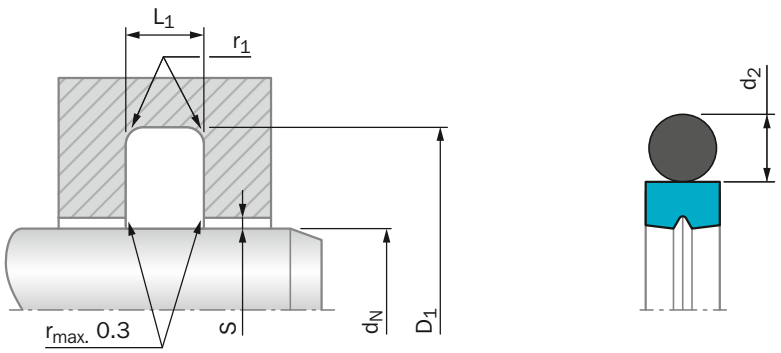

Figure 83: Installation Drawing

Table 65: Installation Dimensions – Standard Recommendations

Series No.	Rod Diameter d_N f8/h9		Groove Diameter	Groove Width	Radius	Radial Clearance S_{max}*			O-Ring Cross Section
	Standard Range	Available Range	D_1 H9	L_1 +0.2	r_1 max	10 MPa	20 MPa	30 MPa	d_2
RGS0	5 - 7.9	5 - 150.0	d_N + 5.0**	2.2	0.4	0.25	0.20	0.15	1.78
RGS1	8 - 18.9	8 - 260.0	d_N + 7.5	3.2	0.6	0.40	0.25	0.15	2.62
RGS2	19 - 37.9	19 - 480.0	d_N + 11.0	4.2	1.0	0.45	0.25	0.20	3.53
RGS3	38 - 199.9	19 - 750.0	d_N + 15.5	6.3	1.3	0.55	0.30	0.20	5.33
RGS4	200 - 255.9	38 - 750.0	d_N + 21.0	8.1	1.8	0.60	0.35	0.25	7.00
RGS8***	256 - 649.9	120 - 999.9	d_N + 24.5	8.1	1.8	0.60	0.35	0.25	7.00
RGS5***	650 - 999.9	256 - 999.9	d_N + 28.0	9.5	2.5	0.65	0.50	0.30	8.40

* At pressures > 30 MPa use diameter tolerance H8/f8 (bore/rod) in the area of the seal or consult your local Trelleborg Sealing Solutions marketing company for alternative material or profiles.
Slydring® / Wear Rings are not applicable at very small radial clearances please consult the Slydring® section in this catalog.
** Can also be used in Turcon® Glyd Ring® T groove d_N + 4.9 mm.
*** Grooves are not according to ISO 7425-2.

ORDERING EXAMPLE

Glyd Ring® Hz complete with O-Ring, Standard application:

Series:	RGS30 from Table 65
Rod diameter:	d_N = 80.0 mm
TSS Part No.:	RGS300800 from Table 66

Select the material from Table 64. The corresponding code numbers are appended to the TSS Part No. Together they form the TSS Article Number.
The TSS Article Number for all intermediate sizes can be determined by following the example:

TSS Article No. RGS3 0 0800 - M12 N

- Series No. — RGS3
- Type (Standard) — 0
- Rod Diameter x 10**** — 0800
- Quality Index (Standard) — -
- Material Code (Seal Ring) — M12
- Material Code (O-Ring) — N

**** For diameters d_N ≥ 1000 mm only on TSS Special Article Number.

IMPORTANT NOTE

Installation Dimensions: For rod sealing the groove diameters are **not** identical to diameters for Stepseal® 2K, Glyd Ring® T and Glyd Ring® PG43.

Table 66: Installation Dimensions / TSS Part No.

Rod Dia. d_N f8/h9	Groove Dia. D_1 H9	Groove Width L_1 +0.2	TSS Part No.	O-Ring Size
8.0	**13.0**	**2.2**	**RGS000080**	**9.50 x 1.80**
8.0	**15.5**	**3.2**	**RGS100080**	**10.77 x 2.62**
10.0	**15.0**	**2.2**	**RGS000100**	**11.80 x 1.80**
10.0	**17.5**	**3.2**	**RGS100100**	**12.37 x 2.62**
12.0	**17.0**	**2.2**	**RGS000120**	**14.00 x 1.78**
12.0	**19.5**	**3.2**	**RGS100120**	**14.50 x 2.65**
14.0	**19.0**	**2.2**	**RGS000140**	**15.60 x 1.78**
14.0	**21.5**	**3.2**	**RGS100140**	**17.12 x 2.62**
15.0	20.0	2.2	RGS000150	17.17 x 1.78
15.0	22.5	3.2	RGS100150	18.00 x 2.65
16.0	**21.0**	**2.2**	**RGS000160**	**17.17 x 1.78**
16.0	**23.5**	**3.2**	**RGS100160**	**18.72 x 2.62**
18.0	**23.0**	**2.2**	**RGS000180**	**20.35 x 1.78**
18.0	**25.5**	**3.2**	**RGS100180**	**20.29 x 2.62**
19.0	30.0	4.2	RGS200190	23.40 x 3.53
20.0	**27.5**	**3.2**	**RGS100200**	**21.89 x 2.62**
20.0	**31.0**	**4.2**	**RGS200200**	**25.00 x 3.53**
22.0	**29.5**	**3.2**	**RGS100220**	**25.07 x 2.62**
22.0	**33.0**	**4.2**	**RGS200220**	**26.58 x 3.53**
24.0	31.5	3.2	RGS100240	26.64 x 2.62
25.0	**32.5**	**3.2**	**RGS100250**	**28.24 x 2.62**
25.0	**36.0**	**4.2**	**RGS200250**	**29.75 x 3.53**
25.4	32.9	3.2	RGS100254	28.24 x 2.62
25.4	36.4	4.2	RGS200254	29.75 x 3.53
26.0	33.5	3.2	RGS100260	28.24 x 2.62
26.0	37.0	4.2	RGS200260	31.35 x 3.53
27.0	34.5	3.2	RGS100270	29.82 x 2.62
28.0	**35.5**	**3.2**	**RGS100280**	**31.42 x 2.62**
28.0	**39.0**	**4.2**	**RGS200280**	**32.92 x 3.53**
28.6	36.1	3.2	RGS100286	31.42 x 2.62
29.0	36.5	3.2	RGS100290	31.42 x 2.62
30.0	37.5	3.2	RGS100300	32.99 x 2.62
30.0	41.0	4.2	RGS200300	34.52 x 3.53
32.0	**43.0**	**4.2**	**RGS200320**	36.09 x 3.53
35.0	46.0	4.2	RGS200350	40.87 x 3.53
36.0	**43.5**	**3.2**	**RGS100360**	**39.34 x 2.62**
36.0	**47.0**	**4.2**	**RGS200360**	**40.87 x 3.53**
38.0	49.0	4.2	RGS200380	44.04 x 3.53
38.0	53.5	6.3	RGS300380	43.82 x 5.33
39.0	50.0	4.2	RGS200390	44.04 x 3.53
40.0	**51.0**	**4.2**	**RGS200400**	**44.04 x 3.53**

Rod Dia. d_N f8/h9	Groove Dia. D_1 H9	Groove Width L_1 +0.2	TSS Part No.	O-Ring Size
40.0	**55.5**	**6.3**	**RGS300400**	**46.99 x 5.33**
42.0	53.0	4.2	RGS200420	47.22 x 3.53
42.0	57.5	6.3	RGS300420	46.99 x 5.33
44.0	55.0	4.2	RGS200440	47.22 x 3.53
44.4	59.9	6.3	RGS300444	50.17 x 5.33
45.0	**56.0**	**4.2**	**RGS200450**	**50.39 x 3.53**
45.0	**60.5**	**6.3**	**RGS300450**	**50.17 x 5.33**
48.0	59.0	4.2	RGS200480	53.57 x 3.53
48.0	63.5	6.3	RGS300480	53.34 x 5.33
50.0	**61.0**	**4.2**	**RGS200500**	**53.57 x 3.53**
50.0	**65.5**	**6.3**	**RGS300500**	**56.52 x 5.33**
50.8	61.8	4.2	RGS200508	53.57 x 3.53
50.8	66.3	6.3	RGS300508	56.52 x 5.33
52.0	63.0	4.2	RGS200520	56.74 x 3.53
52.0	67.5	6.3	RGS300520	56.52 x 5.33
54.0	69.5	6.3	RGS300540	59.69 x 5.33
55.0	66.0	4.2	RGS200550	59.92 x 3.53
55.0	70.5	6.3	RGS300550	59.69 x 5.33
56.0	**67.0**	**4.2**	**RGS200560**	**59.92 x 3.53**
56.0	**71.5**	**6.3**	**RGS300560**	**62.87 x 5.33**
58.0	73.5	6.3	RGS300580	62.87 x 5.33
60.0	71.0	4.2	RGS200600	63.09 x 3.53
60.0	75.5	6.3	RGS300600	66.04 x 5.33
63.0	**74.0**	**4.2**	**RGS200630**	**66.27 x 3.53**
63.0	**78.5**	**6.3**	**RGS300630**	**69.22 x 5.33**
65.0	80.5	6.3	RGS300650	72.39 x 5.33
67.0	78.0	4.2	RGS200670	72.62 x 3.53
70.0	**81.0**	**4.2**	**RGS200700**	**75.79 x 3.53**
70.0	**85.5**	**6.3**	**RGS300700**	**75.57 x 5.33**
72.0	83.0	4.2	RGS200720	75.79 x 3.53
75.0	86.0	4.2	RGS200750	78.97 x 3.53
75.0	90.5	6.3	RGS300750	81.92 x 5.33
80.0	**91.0**	**4.2**	**RGS200800**	**85.32 x 3.53**
80.0	**95.5**	**6.3**	**RGS300800**	**85.09 x 5.33**
83.0	94.0	4.2	RGS200830	88.49 x 3.53
85.0	100.5	6.3	RGS300850	91.44 x 5.33
86.0	97.0	4.2	RGS200860	91.67 x 3.53
90.0	**101.0**	**4.2**	**RGS200900**	**94.84 x 3.53**
90.0	**105.5**	**6.3**	**RGS300900**	**97.79 x 5.33**
92.0	103.0	4.2	RGS200920	98.02 x 3.53
95.0	106.0	4.2	RGS200950	101.19 x 3.53

Rod Dia. d_N f8/h9	Groove Dia. D_1 H9	Groove Width L_1 +0.2	TSS Part No.	O-Ring Size
95.0	110.5	6.3	RGS300950	100.97 x 5.33
100.0	**111.0**	**4.2**	**RGS201000**	**104.37 x 3.53**
100.0	**115.5**	**6.3**	**RGS301000**	**107.32 x 5.33**
101.6	112.6	4.2	RGS201016	107.54 x 3.53
101.6	117.1	6.3	RGS301016	107.32 x 5.33
104.7	120.2	6.3	RGS301047	110.49 x 5.33
105.0	116.0	4.2	RGS201050	110.72 x 3.53
105.0	120.5	6.3	RGS301050	110.49 x 5.33
110.0	**121.0**	**4.2**	**RGS201100**	**113.89 x 3.53**
110.0	**125.5**	**6.3**	**RGS301100**	**116.84 x 5.33**
110.0	**131.0**	**8.1**	**RGS401100**	**120.02 x 7.00**
112.0	127.5	6.3	RGS301120	116.84 x 5.33
115.0	126.0	4.2	RGS201150	120.24 x 3.53
115.0	130.5	6.3	RGS301150	120.02 x 5.33
118.0	133.5	6.3	RGS301180	123.19 x 5.33
120.0	131.0	4.2	RGS201200	126.59 x 3.53
120.0	135.5	6.3	RGS301200	126.37 x 5.33
125.0	**136.0**	**4.2**	**RGS201250**	**129.77 x 3.53**
125.0	**140.5**	**6.3**	**RGS301250**	**132.72 x 5.33**
129.0	140.0	4.2	RGS201290	132.94 x 3.53
130.0	141.0	4.2	RGS201300	136.12 x 3.53
130.0	145.5	6.3	RGS301300	135.89 x 5.33
135.0	146.0	4.2	RGS201350	139.29 x 3.53
135.0	150.5	6.3	RGS301350	142.24 x 5.33
140.0	**151.0**	**4.2**	**RGS201400**	**145.64 x 3.53**
140.0	**155.5**	**6.3**	**RGS301400**	**145.42 x 5.33**
145.0	156.0	4.2	RGS201450	148.82 x 3.53
145.0	160.5	6.3	RGS301450	151.77 x 5.33
150.0	165.5	6.3	RGS301500	158.12 x 5.33
160.0	**175.5**	**6.3**	**RGS301600**	**164.47 x 5.33**
160.0	**181.0**	**8.1**	**RGS401600**	**170.82 x 7.00**
165.0	180.5	6.3	RGS301650	170.82 x 5.33
170.0	181.0	4.2	RGS201700	177.39 x 3.53
170.0	185.5	6.3	RGS301700	177.17 x 5.33
175.0	190.5	6.3	RGS301750	183.52 x 5.33
180.0	**191.0**	**4.2**	**RGS201800**	**183.74 x 3.53**
180.0	**195.5**	**6.3**	**RGS301800**	**189.87 x 5.33**
180.0	**201.0**	**8.1**	**RGS401800**	**189.87 x 7.00**
190.0	201.0	4.2	RGS201900	196.44 x 3.53
190.0	205.5	6.3	RGS301900	196.22 x 5.33
200.0	**215.5**	**6.3**	**RGS302000**	**208.92 x 5.33**
200.0	**221.0**	**8.1**	**RGS402000**	**208.90 x 7.00**

Rod Dia. d_N f8/h9	Groove Dia. D_1 H9	Groove Width L_1 +0.2	TSS Part No.	O-Ring Size
205.0	220.5	6.3	RGS302050	208.92 x 5.33
210.0	225.5	6.3	RGS302100	215.27 x 5.33
220.0	**235.5**	**6.3**	**RGS302200**	**227.97 x 5.33**
220.0	**241.0**	**8.1**	**RGS402200**	**227.97 x 7.00**
230.0	245.5	6.3	RGS302300	234.32 x 5.33
230.0	251.0	8.1	RGS402300	240.67 x 7.00
240.0	255.5	6.3	RGS302400	247.02 x 5.33
240.0	261.0	8.1	RGS402400	253.37 x 7.00
250.0	**271.0**	**8.1**	**RGS402500**	**266.07 x 7.00**
260.0	284.5	8.1	RGS802600	266.07 x 7.00
270.0	291.0	8.1	RGS402700	278.77 x 7.00
270.0	294.5	8.1	RGS802700	278.77 x 7.00
275.0	299.5	8.1	RGS802750	291.47 x 7.00
280.0	**301.0**	**8.1**	**RGS402800**	**291.47 x 7.00**
280.0	**304.5**	**8.1**	**RGS802800**	**291.47 x 7.00**
290.0	311.0	8.1	RGS402900	304.17 x 7.00
290.0	314.5	8.1	RGS802900	304.17 x 7.00
300.0	324.5	8.1	RGS803000	316.87 x 7.00
310.0	331.0	8.1	RGS403100	316.87 x 7.00
310.0	334.5	8.1	RGS803100	316.87 x 7.00
320.0	**344.5**	**8.1**	**RGS803200**	**329.57 x 7.00**
330.0	354.5	8.1	RGS803300	342.27 x 7.00
340.0	364.5	8.1	RGS803400	354.97 x 7.00
350.0	371.0	8.1	RGS403500	354.97 x 7.00
350.0	374.5	8.1	RGS803500	367.67 x 7.00
360.0	384.5	8.1	**RGS803600**	367.67 x 7.00
370.0	391.0	8.1	RGS403700	380.37 x 7.00
370.0	394.5	8.1	RGS803700	380.37 x 7.00
380.0	404.5	8.1	RGS803800	393.07 x 7.00
390.0	414.5	8.1	RGS803900	405.26 x 7.00
400.0	421.0	8.1	RGS404000	405.26 x 7.00
400.0	424.5	8.1	RGS804000	417.96 x 7.00
410.0	434.5	8.1	RGS804100	417.96 x 7.00
420.0	444.5	8.1	RGS804200	430.66 x 7.00
430.0	454.5	8.1	RGS804300	443.36 x 7.00
440.0	464.5	8.1	RGS804400	456.06 x 7.00
450.0	474.5	8.1	RGS804500	468.76 x 7.00
460.0	484.5	8.1	RGS804600	468.76 x 7.00
470.0	494.5	8.1	RGS804700	481.38 x 7.00
500.0	524.5	8.1	RGS805000	506.86 x 7.00
550.0	574.5	8.1	RGS805500	557.66 x 7.00
560.0	584.5	8.1	RGS805600	582.68 x 7.00

Rod Dia.	Groove Dia.	Groove Width	TSS Part No.	O-Ring Size
d_N f8/h9	D_1 H9	L_1 +0.2		
570.0	594.5	8.1	RGS805700	582.68 x 7.00
580.0	604.5	8.1	RGS805800	608.08 x 7.00
590.0	614.5	8.1	RGS805900	608.08 x 7.00
600.0	624.5	8.1	RGS806000	608.08 x 7.00
630.0	654.5	8.1	RGS806300	658.88 x 7.00
650.0	678.0	9.5	RGS506500	662.90 x 8.40
660.0	688.0	9.5	RGS506600	672.90 x 8.40
670.0	698.0	9.5	RGS506700	682.90 x 8.40
680.0	708.0	9.5	RGS506800	692.90 x 8.40
700.0	724.5	8.1	RGS807000	712.90 x 8.40
800.0	828.0	9.5	RGS508000	812.90 x 8.40
850.0	878.0	9.5	RGS508500	862.90 x 8.40
900.0	928.0	9.5	RGS509000	912.90 x 8.40
950.0	978.0	9.5	RGS509500	962.90 x 8.40
960.0	988.0	9.5	RGS509600	972.90 x 8.40

The rod diameters in **bold** type correspond to the recommendations of ISO 3320.

Part No. for other dimensions and **all** intermediate sizes up to 999.9 mm diameter including imperial (inch) sizes can be supplied.

Larger sizes up to 2600 mm are available upon request.

Turcon® AQ-Seal® with Bean Seal

Double-acting

Rubber-energized plastic-faced seal

Material:
Turcon®, and Zurcon® and Elastometer

■ Turcon® AQ-Seal® with Bean Seal*

■ Description

Turcon® AQ-Seal® with Bean Seal is a double-acting seal consisting of a seal ring of Turcon® material, a Bean Seal in Zurcon® Z52 and an O-Ring as energizing element.

The Turcon® seal ring and the Bean Seal together create the dynamic sealing function while the O-Ring performs the static sealing function.

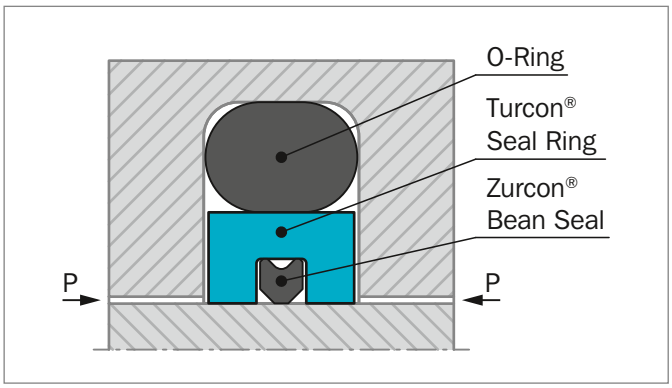

Figure 84: Turcon® AQ-Seal® with Bean Seal

AQ-Seal® with Bean Seal combines the benefits of a low-friction Turcon® slipper seal with the high sealing characteristics of an elastomeric seal by incorporating a limited foot print Bean Seal in the dynamic sealing face. This optimizes leakage control while minimizing friction.

ADVANTAGES

- High sealing effect in applications requiring media separation, e.g. fluid/fluid or fluid/gas
- Double security through the combination of low friction special materials with elastomer seals
- Higher pressure application, higher sliding speed compared to AQ-Seal® with Quad-Ring®
- Outstanding sliding properties, no stick-slip effect.
- Simple groove design, small installation space. Interchangeable with Turcon® Glyd Ring® , Turcon® Glyd Ring® T and Turcon® Stepseal® 2K groove. Installation according to ISO 7425-2 possible.
- Available for any rod diameters from 18 and up to 2200 mm.

APPLICATION EXAMPLES

AQ-Seal® with Bean Seal is the recommended sealing element for double acting positioning and holding cylinders for:

- Mobile hydraulics
- Machine tools
- Presses
- Stabilizers
- Heavy duty suspension cylinders
- Medium separation of fluid /fluid or fluid/gas; please note that one of the media must be lubricating
- Hydro-pneumatic suspensions for heavy vehicles
- Cylinders with retaining function over longer periods such as jacks and support cylinders.

OPERATING CONDITIONS

Pressure:	Up to 50 MPa with mineral oil Up to 30 MPa for media with reduced lubricating properties
Speed:	Up to 2 m/s with linear movements
Temperature:	-45 °C to +110 °C depending on seal and O-Ring material
Media:	Mineral oil-based hydraulic fluids, flame retardant hydraulic fluids, phosphate ester and others, depending on temperature, seal, O-Ring and Bean Seal material compatibility see Table 67 and Table 68
Clearance:	The maximum permissible radial clearance S_{max} is shown in Table 69 as a function of the operating pressure and functional diameter.

IMPORTANT NOTE

The above data are maximum values and cannot be used at the same time, e.g. the maximum operating speed depends on material type, pressure, temperature and gap value. Temperature range also depends on media.

* Patent-No. EP 0 424 372

INSTALLATION INSTRUCTIONS

AQ-Seal® V is installed according to information on page 31 and 32.

Closed groove installation applies same dimensions as for Turcon® Stepseal® 2K in Table 6 page 32.

RECOMMENDED MATERIALS

The following material combinations have proven effective for hydraulic applications:

Turcon® AQ-Seal® in Turcon® M12
All round material for light to heavy hydraulic applications with linear, movements in mineral oils, flame retardant hydraulic fluids and phosphate ester:

Bean Seal:	Zurcon® Z52	
O-Ring:	NBR 70 Shore A	N
	FKM 70 Shore A	V
Set code:	M12N or M12V	

Turcon® AQ-Seal® in Turcon® T46
For medium to heavy applications with linear movements in mineral oils and other media with good lubrication:

Bean Seal:	Zurcon® Z52	
O-Ring:	NBR 70 Shore A	N
	FKM 70 Shore A	V
Set code:	T46N or T46V	

For specific applications, all Turcon® materials are available.

Other material combinations are listed in Table 67.

Table 67: Recommended Turcon® Materials for Turcon® AQ-Seal®

Material, Applications, Properties	Code	O–Ring Material Shore A	Code	O-Ring Operating Temp.* °C	Mating Surface Material	MPa max. Dyna-mic
Turcon® M12 First material choice for seals in linear motion Overall improved properties For new constructions and updating For all commonly applied hydraulic fluids including fluids with low lubrication performance Lowest friction and best sliding properties Lowest wear on selas Improved absorption of abrasion of counter surfcace BAM tested Mineal fiber and Additives filled Color: Dark gray	M12	NBR 70	N	-30 to +100	Steel Steel hardened Steel chrome plated (rod) Steel plated (rod) Cast iron Stainless steel Titanium	40
		NBR 70 Low temp.	T	-45 to +80		
		FKM 70	V	-10 to (+200)		

Material, Applications, Properties	Code	O–Ring Material Shore A	Code	O-Ring Operating Temp.* °C	Mating Surface Material	MPa max. Dyna-mic
Turcon® T08 For lubricating fluids and linear motion Very high compressive strength and extrusion resistance Hard counter surfaces is recommended Bronze filled Color: Light to dark brown, which may have variations in shading	T08	NBR 70	N	-30 to +100	Steel hardened Steel chrome plated (rod) Cast iron	50
		NBR 70 Low temp.	T	-45 to +80		
		FMK 70	V	-10 to (+200)		
Turcon® T10 For hydraulic and pneumatic For linear motion in lubricating and non-lubricating fluids High extrusion resistance Good chemical resistance Not for electrically conducting fluids BAM tested Carbon, graphite filled Color: Black	T10	NBR 70	N	-30 to +100	Steel Steel chrome plated (rod) Stainless steel	30
		NBR 70 Low temp.	T	-45 to +80		
		FKM 70	V	-10 to (+200)		
Turcon® T29 For lubricating and non-lubricating fluids Good extrusion resistance Surface texture is not suitable for gas sealin Not for electrically conducting fluids Carbon fiber filled Color: Gray	T29	NBR 70	N	-30 to +100	Steel Steel chrome plated (rod) Cast iron Stainless steel	30
		NBR 70 Low temp.	T	-45 to +80		
		FKM 70	V	-10 to (+200)		
Turcon® T40 For lubricating and non-lubricating fluids High frequency and short strokes Water hydraulics Surface texture is not suitable for gas sealing Carbon fiber filled Color: Gray	T40	NBR 70	N	-30 to +100	Steel chrome plated (rod) Cast iron Stainless steel Aluminum	25
		NBR 70 Low temp.	T	-45 to +80		
		FKM 70	V	-10 to (+200)		
Turcon® T46 For lubricated hydraulics in linear motion High compressive strength High extrusion resistance Very good sliding and wear properties Bronze filled BAM tested Color: Light to dark brown, which may have variations in shading	T46	NBR 70	N	-30 to +100	Steel hardened Steel chrome plated (rod) Cast iron	40
		NBR 70 Low temp.	T	-45 to +80		
		FKM 70	V	-10 to (+200)		

Table continues on next page

Material, Applications, Properties	Code	O–Ring Material Shore A	Code	O-Ring Operating Temp.* °C	Mating Surface Material	MPa max. Dyna-mic
Zurcon® Z80 For lubricating and non-lubricating fluids Water based fluids, air and gases Dry air pneumatics High abrasion and extrusion resistance For service in abrasive conditions and media with particles Good chemical resistance Limited temperature capability (-60 to +80 °C) UHMWPE (Ultra High Molecular Weight Polyethylene) Color: White to off-white	Z80	NBR 70	N	-30 to (+100)	Steel Steel hardened Steel chrome plated (rod) Stainless steel Aluminum Ceramic coating	30
		NBR 70 Low temp.	T	-45 to +80		

* The O-Ring Operation Temperature is only valid in mineral hydraulic oil (except EPDM).

** Material not suitable for mineral oils.

BAM: Tested by "Bundesanstalt Materialprüfung, Germany"

Highlighted materials are recommended.

Table 68: Zurcon® Z52 for Bean Seal

Material, Applications, Properties	Code	O–Ring Material Shore A	Code	O-Ring Operating Temp.* °C	Mating Surface Material	MPa max. Dyna-mic
Turcon® Z52 For mineral oil based fluids High sealing effect High abrasion resistance Good extrusion resistance Limited chemical resistance Max. working temperature +110°C Cast Polyurethane Color: Turquoise	Z52	-	-	-	Steel Steel hardened Steel chrome plated (rod) Cast iron Stainless steel Ceramic coating	-

Installation Recommendation

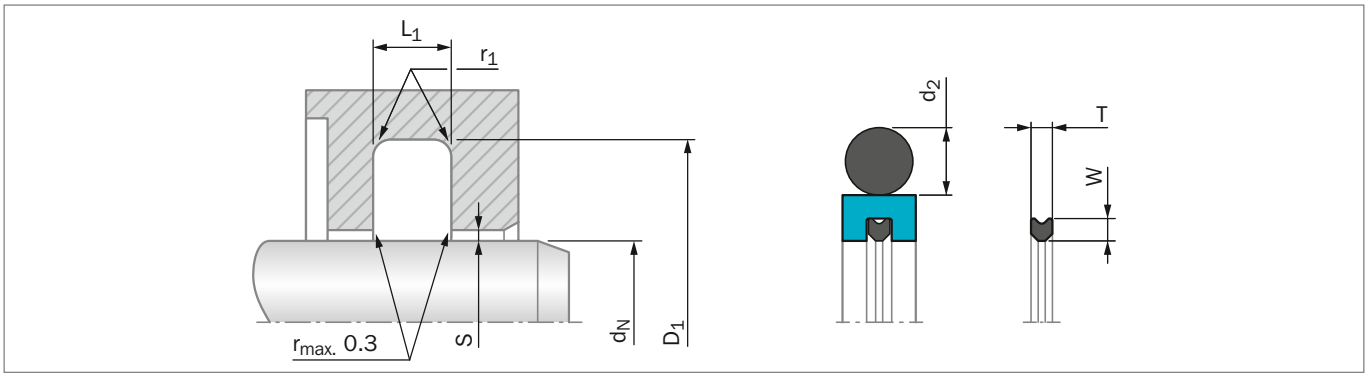

Figure 85: Installation Drawing

Table 69: Installation Dimensions – Standard Installation

Series No.	Rod Diameter d_N f8/h9		Groove Diameter	Groove Width	Radius	Radial Clearance S_{max}*			O-Ring Cross Section	Bean Seal Cross Section	
	Standard Application	Available Range	D_1 H9	L_1 +0.2	$r_{1\,max}$	10 MPa	20 MPA	40 MPa	d_2	W	T
RQB20	19 - 37.9	18 - 450.0	d_N + 10.7	4.2	1.0	0.25	0.15	0.10	3.53	1.70	1.70
RQB30	38 - 199.9	30 - 650.0	d_N + 15.1	6.3	1.3	0.30	0.20	0.15	5.33	1.70	1.70
RQB40	200 - 255.9	105 - 999.9	d_N + 20.5	8.1	1.8	0.30	0.20	0.15	7.00	2.45	2.45
RQB80	256 - 649.9	120 - 999.9	d_N + 24.0	8.1	1.8	0.30	0.20	0.15	7.00	2.45	2.45
RQB50	650 - 999.9	285 - 999.9	d_N + 27.3	9.5	2.5	0.45	0.30	0.25	8.40	3.50	3.65
RQB5X	-	1000 - 1200.0	d_N + 27.3	9.5	2.5	0.45	0.40	0.35	8.40	3.50	3.65
RQB60**	-	650 - 999.9	d_N + 38.0	13.8	3.0	0.70	0.60	0.45	12.00	5.20	5.05
RQB6X**	1000 - 2200		d_N + 38.0	13.8	3.0	0.70	0.60	0.45	12.00	5.20	5.05

* At pressures > **40 MPa** use diameter tolerance H8/f8 (bore/rod) in the area of the seal use Turcon® AQ-Seal® 5 CR or consult your local Trelleborg Sealing Solutions marketing company for alternative material or profiles.
Slydring® / Wear Rings are not applicable at very small radial clearances please consult the Slydring® section in this catalog.
All AQ-Seal® supplied without Bean Seals must have "W" in the 5th character of the TSS Article Number.
** All O-Rings with 12 mm cross section are delivered as a special profile ring.

ORDERING EXAMPLE

Turcon® AQ-Seal® complete with Bean Seal and O-Ring, standard application:

Series:	RQB30 from Table 69
Rod diameter:	d_N = 80.0 mm
TSS Part No.:	RQB300800 from Table 70

Select the material from Table 67. The corresponding code numbers are appended to the TSS Part No. Together these form the TSS Article Number. The TSS Article Number for all intermediate sizes can be determined by following the example:

TSS Article No. RQB3 0 0800 - M12 N

- Series No. — RQB3
- Type (Standard) — 0
- Rod Diameter x 10*** — 0800
- Quality Index (Standard) — -
- Material Code (Seal Ring) — M12
- Material Code (O-Ring) — N

*** For diameters $d_N \geq 1000.0$ mm multiply only by factor 1.
Example: RQB5X for diameter d_N = 1200.0 mm
TSS Article No.: RQB5X1200-M12N

Table 70: Installation Dimensions / TSS Part No

Rod Dia. d_N h9	Groove Dia. D_1 H9	Groove Width L_1 +0.2	TSS Part No.	O-Ring Size
18.0	**29.0**	**4.2**	**RQB200180**	**21.82 x 3.53**
20.0	**31.0**	**4.2**	**RQB200200**	**25.00 x 3.53**
22.0	**33.0**	**4.2**	**RQB200220**	**26.58 x 3.53**
25.0	**36.0**	**4.2**	**RQB200250**	**29.75 x 3.53**
28.0	**39.0**	**4.2**	**RQB200280**	**32.92 x 3.53**
30.0	41.0	4.2	RQB200300	34.52 x 3.53
32.0	**43.0**	**4.2**	**RQB200320**	**36.09 x 3.53**
35.0	46.0	4.2	RQB200350	40.87 x 3.53
36.0	**47.0**	**4.2**	**RQB200360**	**40.87 x 3.53**
40.0	**51.0**	**4.2**	**RQB200400**	**44.04 x 3.53**
40.0	**55.5**	**6.3**	**RQB300400**	**46.99 x 5.33**
42.0	53.0	4.2	RQB200420	47.22 x 3.53
42.0	57.5	6.3	RQB300420	46.99 x 5.33
45.0	**56.0**	**4.2**	**RQB200450**	**50.39 x 3.53**
45.0	**60.5**	**6.3**	**RQB300450**	**50.17 x 5.33**
48.0	59.0	4.2	RQB200480	53.57 x 3.55
48.0	63.5	6.3	RQB300480	53.34 x 5.33
50.0	**61.0**	**4.2**	**RQB200500**	**53.57 x 3.53**
50.0	**65.5**	**6.3**	**RQB300500**	**56.52 x 5.33**
52.0	63.0	4.2	RQB200520	56.74 x 3.53
52.0	67.5	6.3	RQB300520	56.52 x 5.33
55.0	66.0	4.2	RQB200550	59.92 x 3.53
55.0	70.5	6.3	RQB300550	59.69 x 5.33
56.0	**67.0**	**4.2**	**RQB200560**	**59.92 x 3.53**
56.0	**71.5**	**6.3**	**RQB300560**	**62.87 x 5.33**
60.0	71.0	4.2	RQB200600	63.09 x 3.53
60.0	75.5	6.3	RQB300600	66.04 x 5.33
63.0	**74.0**	**4.2**	**RQB200630**	**66.27 x 3.53**
63.0	**78.5**	**6.3**	**RQB300630**	**69.22 x 5.33**
65.0	80.5	6.3	RQB300650	72.39 x 5.33
70.0	**81.0**	**4.2**	**RQB200700**	**75.79 x 3.53**
70.0	**85.5**	**6.3**	**RQB300700**	**75.57 x 5.33**
75.0	86.0	4.2	RQB200750	78.97 x 3.53
75.0	90.5	6.3	RQB300750	81.92 x 5.33
80.0	**91.0**	**4.2**	**RQB200800**	**85.32 x 3.53**
80.0	**95.5**	**6.3**	**RQB300800**	**85.09 x 5.33**
85.0	100.5	6.3	RQB300850	91.44 x 5.33
90.0	**101.0**	**4.2**	**RQB200900**	**94.84 x 3.53**
90.0	**105.5**	**6.3**	**RQB300900**	**97.79 x 5.33**
95.0	106.0	4.2	RQB200950	101.19 x 3.53

Rod Dia. d_N h9	Groove Dia. D_1 H9	Groove Width L_1 +0.2	TSS Part No.	O-Ring Size
95.0	110.5	6.3	RQB300950	100.97 x 5.33
100.0	**111.0**	**4.2**	**RQB201000**	**104.37 x 3.53**
100.0	**115.5**	**6.3**	**RQB301000**	**107.32 x 5.33**
105.0	116.0	4.2	RQB201050	110.72 x 3.53
105.0	120.5	6.3	RQB301050	110.49 x 5.33
110.0	**121.0**	**4.2**	**RQB201100**	**113.89 x 3.53**
110.0	**125.5**	**6.3**	**RQB301100**	**116.84 x 5.33**
110.0	131.0	8.1	RQB401100	120.02 x 7.00
115.0	126.0	4.2	RQB201150	120.24 x 3.53
115.0	130.5	6.3	RQB301150	120.02 x 5.33
120.0	131.0	4.2	RQB201200	126.59 x 3.53
120.0	135.5	6.3	RQB301200	126.37 x 5.33
125.0	**136.0**	**4.2**	**RQB201250**	**129.77 x 3.53**
125.0	**140.5**	**6.3**	**RQB301250**	**132.72 x 5.33**
130.0	141.0	4.2	RQB201300	136.12 x 3.53
130.0	145.5	6.3	RQB301300	135.89 x 5.33
135.0	146.0	4.2	RQB201350	139.29 x 3.53
135.0	150.5	6.3	RQB301350	142.24 x 5.33
140.0	**151.0**	**4.2**	**RQB201400**	**145.64 x 3.53**
140.0	**155.5**	**6.3**	**RQB301400**	**145.42 x 5.33**
145.0	156.0	4.2	RQB201450	148.82 x 3.53
145.0	160.5	6.3	RQB301450	151.77 x 5.33
150.0	165.5	6.3	RQB301500	158.12 x 5.33
160.0	**175.5**	**6.3**	**RQB301600**	**164.47 x 5.33**
160.0	**181.0**	**8.1**	**RQB401600**	**170.82 x 7.00**
165.0	180.5	6.3	RQB301650	170.82 x 5.33
170.0	181.0	4.2	RQB201700	177.39 x 3.53
170.0	185.5	6.3	RQB301700	177.17 x 5.33
175.0	190.5	6.3	RQB301750	183.52 x 5.33
180.0	**191.0**	**4.2**	**RQB201800**	**183.74 x 3.53**
180.0	**195.5**	**6.3**	**RQB301800**	**189.87 x 5.33**
180.0	**201.0**	**8.1**	**RQB401800**	**189.87 x 7.00**
190.0	201.0	4.2	RQB201900	196.44 x 3.53
190.0	205.5	6.3	RQB301900	196.22 x 5.33
200.0	**215.5**	**6.3**	**RQB302000**	**208.92 x 5.33**
200.0	**221.0**	**8.1**	**RQB402000**	**208.92 x 7.00**
210.0	225.5	6.3	RQB302100	215.27 x 5.33
220.0	**235.5**	**6.3**	**RQB302200**	**227.97 x 5.33**
220.0	**241.0**	**8.1**	**RQB402200**	**227.97 x 7.00**
230.0	245.5	6.3	RQB302300	234.32 x 5.33

Rod Dia.	Groove Dia.	Groove Width	TSS Part No.	O-Ring Size
d_N h9	D_1 H9	L_1 +0.2		
230.0	251.0	8.1	RQB402300	240.67 x 7.00
240.0	255.5	6.3	RQB302400	247.02 x 5.33
240.0	261.0	8.1	RQB402400	253.37 x 7.00
250.0	**271.0**	**8.1**	**RQB402500**	**266.07 x 7.00**
260.0	284.5	8.1	RQB802600	266.07 x 7.00
270.0	291.0	8.1	RQB402700	278.77 x 7.00
270.0	294.5	8.1	RQB802700	278.77 x 7.00
280.0	**301.0**	**8.1**	**RQB402800**	**291.47 x 7.00**
280.0	**304.5**	**8.1**	**RQB802800**	**291.47 x 7.00**
300.0	324.5	8.1	RQB803000	316.87 x 7.00
320.0	**344.5**	**8.1**	**RQB803200**	**329.57 x 7.00**
350.0	371.0	8.1	RQB403500	354.97 x 7.00
350.0	375.5	8.1	RQB803500	367.67 x 7.00
360.0	**384.5**	**8.1**	**RQB803600**	**367.67 x 7.00**
400.0	421.0	8.1	RQB404000	405.26 x 7.00
400.0	424.5	8.1	RQB804000	417.96 x 7.00
450.0	474.5	8.1	RQB804500	468.76 x 7.00
500.0	524.5	8.1	RQB805000	506.86 x 7.00
550.0	575.5	8.1	RQB805500	557.66 x 7.00
600.0	624.5	8.1	RQB806000	608.08 x 7.00
650.0	678.0	9.5	RQB506500	663.00 x 8.40
700.0	724.5	8.1	RQB807000	712.00 x 7.00
800.0	828.0	9.5	RQB508000	813.00 x 8.40
900.0	928.0	9.5	RQB509000	913.00 x 8.40
1000.0	1028.0	9.5	RQB5X1000	1013.00 x 8.40
1000.0	1038.0	13.8	RQB6X1000	1016.00 x 12.00
1100.0	1138.0	13.8	RQB6X1100	1116.00 x 12.00
1200.0	1228.0	9.5	RQB5X1200	1213.00 x 8.40
1200.0	1238.0	13.8	RQB6X1200	1216.00 x 12.00
1300.0	1338.0	13.8	RQB6X1300	1316.00 x 12.00
1500.0	1538.0	13.8	RQB6X1500	1516.00 x 12.00
2000.0	2038.0	13.8	RQB6X2000	2016.00 x 12.00
2200.0	2238.0	13.8	RQB6X2200	2216.00 x 12.00

The rod diameters in **bold** type are in accordance with the recommendations of ISO 3320.

Other dimensions and all intermediate sizes up to 2200 mm diameter, including imperial (inch) sizes converted to mm, can be supplied.

All O-Rings with 12 mm cross section are delivered as special profile ring.

Turcon® AQ-Seal® 5 with Bean Seal

Double-acting

Rubber-energized plastic-faced seal

Material:
Turcon®, Zurcon® and Elastomer

■ Turcon® AQ-Seal® 5 with Bean Seal*

■ Description

Turcon® AQ-Seal® 5 with Bean Seal is a patented development of the proven standard Turcon® AQ-Seal® .

The particular characteristics of AQ-Seal® 5 with Bean Seal are the seal profile with a defined seal edge and the use of two O-Rings as energizing elements to optimize the pressure profile and to reduce the gas permeability.

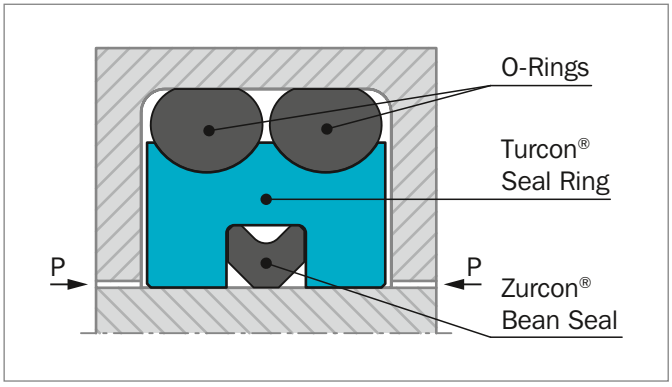

Figure 86: Turcon® AQ-Seal® 5 with Bean Seal

AQ-Seal® 5 with Bean Seal combines the benefits of a low-friction Turcon® slipper seal with the high sealing characteristics of an elastomeric seal by incorporating a limited foot print Bean Seal in the dynamic sealing face. This optimizes leakage control while minimizing friction.

ADVANTAGES

- High sealing effect in applications requiring media separation, e.g. fluid/fluid or fluid/gas
- Double security through the combination of low-friction special materials with elastomer seals
- Higher pressure application, higher sliding speed compared to AQ-Seal® 5 with Quad-Ring®
- Outstanding sliding properties, no stick-slip effect.
- Available for any rod diameters from 32 mm and up to 2200 mm

APPLICATION EXAMPLES

TurconRAQ-Seal® 5 is mainly designed for heavy duty and large diameter applications and is recommended as double acting piston seal for hydraulic equipment such as:

- Mobile hydraulics
- Presses
- Stabilizers
- Heavy duty suspension cylinders
- Media separation of fluid /fluid or fluid/gas; please note that one of the media must be lubricating
- Hydro-pneumatic suspensions for heavy vehicles
- Cylinders with retaining function over longer periods such as jacks and support cylinders

OPERATING CONDITIONS

Pressure:	Up to 60 MPa with mineral oil Up to 40 MPa for media with low lubricating properties
Speed:	Up to 3 m/s with linear movements
Temperature:	-45 °C to +110 °C depending on seal, O-Ring and Bean Seal material
Media:	Mineral oil-based hydraulic fluids, flame retardant hydraulic fluids, phosphate ester and others, depending on temperature, seal, O-Ring and Bean Seal material compatibility see Table 71.
Clearance:	The maximum permissible radial clearance S_{max} is shown in Table 73 as a function of the operating pressure and functional diameter.

IMPORTANT NOTE

The above data are maximum values and cannot be used at the same time, e.g. the maximum operating speed depends on material type, pressure, temperature and gap value. Temperature range also depends on media.

* Patent-No. EP 0 424 372

INSTALLATION INSTRUCTIONS

AQ-Seal® 5 is installed according to information on page 31 and 32.

RECOMMENDED MATERIALS

The following material combinations have proven effective for hydraulic applications:

Turcon® AQ-Seal® 5 in Turcon® M12
All round material for light to heavy hydraulic applications with linear movements in mineral oils, flame retardant hydraulic fluids and phosphate ester.

Bean Seal:	Zurcon® Z52	
O-Ring:	NBR 70 Shore A	N
	FKM 70 Shore A	V
Set code:	M12N or M12V	

Turcon® AQ-Seal® 5 in Turcon® T46
For medium to heavy applications with linear movements in mineral oils and other media with good lubrication:

Bean Seal:	Zurcon® Z52	
O-Ring:	NBR 70 Shore A	N
	FKM 70 Shore A	V
Set code:	T46N or T46V	

For specific applications, all Turcon® materials are available. Other material combinations are listed in Table 71.

Table 71: Recommended Turcon® Materials for Turcon® AQ-Seal® 5

Material, Applications, Properties	Code	O–Ring Material Shore A	Code	O-Ring Operating Temp.* °C	Mating Surface Material	MPa max. Dyna-mic
Turcon® M12 First material choice for seals in linear motion Overall improved properties For new constructions and updating For all commonly applied hydraulic fluids including fluds with low lubrication performance Lowest friction and best sliding properties Loweset wear on seals Improved absorption of abrasive cintainments Low wear or abrasion of counter surfcae BAM tested Mineal fiber and Additives filled Color: Dark gray	M12	NBR 70	N	-30 to +100	Steel Steel hardened Steel chrome plated (rod) Steel plated (rod) Cast iron Stainless steel Titanium	50
		NBR 70 Low temp.	T	-45 to +80		
		FKM 70	V	-10 to (+200)		
Turcon® T08 For lubricating fluids and linear motion Very high compressive strength and extrusion resistance Hard counter surfaces is recommended Bronze filled Color: Light to dark brown, which may have variations in shading	T08	NBR 70	N	-30 to +100	Steel hardened Steel chrome plated (rod) Cast iron	60
		NBR 70 Low temp.	T	-45 to +80		
		FKM 70	V	-10 to (+200)		
Turcon® T10 For hydraulic and pneumatic For linear motion in lubricating and non-lubricating fluids High extrusion resistance Good chemical resistance Not for electrically conducting fluids Carbon, graphite filled BAM tested Color: Black	T10	NBR 70	N	-30 to +100	Steel Steel chrome plated (rod) Stainless steel	40
		NBR 70 Low temp.	T	-45 to +80		
		FKM 70	V	-10 to (+200)		
Turcon® T29 For lubricating and non-lubricating fluids Good extrusion resistance Surface texture is not suitable for gas sealing Not for electrically conducting fluids Carbon fiber filled Color: Gray	T29	NBR 70	N	-30 to +100	Steel Steel chrome plated (rod) Cast iron Stainless steel	30
		NBR 70 Low temp.	T	-45 to +80		
		FKM 70	V	-10 to (+200)		

Table continues on next page

Material, Applications, Properties	Code	O–Ring Material Shore A	Code	O-Ring Operating Temp.* °C	Mating Surface Material	MPa max. Dyna-mic
Turcon® T40 For lubricating and non-lubricating fluids High frequency and short strokes Water hydraulics Surface texture is not suitable for gas sealing Carbon fiber filled Color: Gray	T40	NBR 70	N	-30 to +100	Steel Steel chrome plated (rod) Cast iron Stainless steel Aluminum	25
		NBR 70 Low temp.	T	-45 to +80		
		FKM 70	V	-10 to (+200)		
Turcon® T46 For lubricated hydraulics in linear motion High compressive strength High extrusion resistance Very good sliding and wear properties Bronze filled BAM tested Color: Light to dark brown, which may have variations in shading.	T46	NBR 70	N	-30 to +100	Steel hardened Steel chrome plated (rod) Cast iron	50
		NBR 70 Low temp.	T	-45 to +80		
		FKM 70	V	-10 to (+200)		
Zurcon® Z80 For lubrication and non-lubrication fluids Water based fluids, air and gases Dry air pneumatics High abrasion and extrusion resistance For service in abrasive conditions and media with particles Good chemical resistance Limited temperature capability (-60 to +80 °C) UHMWPE (Ultra High Molecular Weight Polyethylene) Color: White to off-white	Z80	NBR 70	N	-30 to (+100)	Steel Steel hardened Steel chrome plated (rod) Stainless steel Aluminum Ceramic coating	35
		NBR 70 Low temp.	T	-45 to +80		

* The O-Ring Operation Temperature is only valid in mineral hydraulic oil.

BAM: Tested by "Bundesanstalt Materialprüfung, Germany"

Highlighted materials are recommended.

Table 72: Zurcon® Z52 for Bean Seal

Material, Applications, Properties	Code	O–Ring Material Shore A	Code	O-Ring Operating Temp.* °C	Mating Surface Material
Zurcon® Z52 For mineral oil based fluids High sealing effect High abrasion resistance Good extrusion resistance Limited chemical resistance Max. working temperature +110 °C Cast Polyurethane Color: Turquoise	Z52	-	-	-	Steel Steel hardened Steel chrome plated (rod) Cast iron Stainless steel Ceramic coating

Installation Recommendation

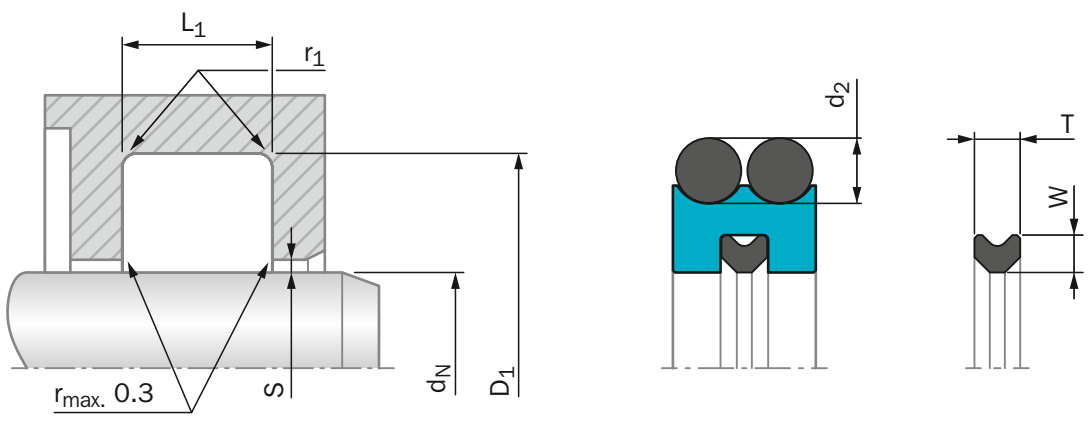

Figure 87: Installation Drawing

Table 73: Installation Dimensions – Standard installation

Series No.	Rod Diameter d_N f8/h9		Groove Diameter	Groove Width	Radius	Radial Clearance S_{max}*			O-Ring Cross Section	Bean Seal Cross Section	
	Standard Application	Available Range	D_1 H9	L_1 +0.2	r_{1max}	10 MPa	20 MPa	40 MPa	d_2	W	T
RQC10	40 - 79.9	32 - 250.0	d_N + 10.0	6.3	0.6	0.30	0.20	0.15	2.62	1.70	1.70
RQC20	80 - 132.9	50 - 450.0	d_N + 13.0	8.3	1.0	0.40	0.30	0.15	3.53	2.52	2.65
RQC30	133 - 462.9	80 - 650.0	d_N + 18.0	12.3	1.3	0.40	0.30	0.20	5.33	3.50	3.65
RQC40	463 - 999.9	180 - 999.9	d_N + 31.0	16.3	1.8	0.50	0.40	0.30	7.00	5.20	5.05
RQC4X	1000 - 2200.0	1000 - 2200.0	d_N + 31.0	16.3	1.8	0.50	0.40	0.30	7.00	5.20	5.05

*At pressures > **40 MPa** use diameter tolerance H8/f8 (bore/rod) in the area of the seal use Turcon® AQ-Seal® 5 CR or consult your local Trelleborg Sealing Solutions marketing company for alternative material or profiles.
Slydring® / Wear Rings are not applicable at very small radial clearances please consult the Slydring® section in this catalog.
All AQ-Seal® supplied without Bean Seals must have "W" in the 5th character of the TSS Article Number.

ORDERING EXAMPLE

AQ-Seal® 5 complete with Bean Seal and O-Rings, standard application:

Series:	RQC20 from Table 73
Rod diameter:	d_N = 80.0 mm
TSS Part No.:	RQC200800 from Table 74

Select the material from Table 71. The corresponding code numbers are appended to the TSS Part No. Together these form the TSS Article Number. The TSS Article Number for all intermediate sizes can be determined by following the example:

TSS Article No. RQC2 0 0800 - M12 N

- Series No. — RQC2
- Type (Standard) — 0
- Rod Diameter x 10** — 0800
- Quality Index (Standard) — -
- Material Code (Seal Ring) — M12
- Material Code (O-Ring) — N

w** For diameters $d_N \geq 1000.0$ mm multiply only by factor 1.
Example: RQC4X for diameter d_N = 1200.0 mm
TSS Article No.: RQC4**X1200**-M12N

Table 74: Installation Dimensions / TSS Part No

Rod Dia. d_N f8/h9	Groove Dia. D_1 H9	Groove Width L_1 +0.2	TSS Part No.	O-Ring Size 2 of
40.0	**50.0**	**6.3**	**RQC100400**	**44.12 x 2.62**
42.0	52.0	6.3	RQC100420	47.29 x 2,62
45.0	**55.0**	**6.3**	**RQC100450**	**50.47 x 2.62**
48.0	58.0	6.3	RQC100480	52.07 x 2.62
50.0	**60.0**	**6.3**	**RQC100500**	**55.25 x 2.62**
50.0	**63.0**	**8.3**	**RQC200500**	**56.74 x 3.53**
52.0	62.0	6.3	RQC100520	56.82 x 2.62
55.0	65.0	6.3	RQC100550	59.99 x 2.62
56.0	**66.0**	**6.3**	**RQC100560**	**61.60 x 2.62**
56.0	**69.0**	**8.3**	**RGC200560**	**63.09 x 3.53**
60.0	70.0	6.3	RQC100600	64.77 x 2.62
60.0	73.0	8.3	RQC200600	66.27 x 3.53
63.0	**73.0**	**6.3**	**RQC100630**	**67.95 x 2.62**
63.0	**76.0**	**8.3**	**RQC200630**	**69.44 x 3.53**
65.0	75.0	6.3	RQC100650	69.52 X 2.62
70.0	**80.0**	**6.3**	**RQC100700**	**75.87 X 2.62**
70.0	**83.0**	**8.3**	**RQC200700**	**75.79 X 3.53**
75.0	85.0	6.3	RQC100750	82.22 X 2.62
75.0	88.0	8.3	RQC200750	82.14 X 3.53
80.0	**90.0**	**6.3**	**RQC100800**	**82.22 x 2.62**
80.0	**93.0**	**8.3**	**RQC200800**	**85.32 x 3.53**
85.0	98.0	8.3	RQC200850	91.67 x 3,53
90.0	**100.0**	**6.3**	**RQC100900**	**94.92 x 2.62**
90.0	**103.0**	**8.3**	**RQC200900**	**94.84 x 3.53**
95.0	108.0	8.3	RQC200950	101.19 x 3.53
100.0	**110.0**	**6.3**	**RQC101000**	**101.27 x 2.62**
100.0	**113.0**	**8.3**	**RQC201000**	**104.37 x 3.53**
105.0	118.0	8.3	RQC201050	110.72 x 3.53
110.0	**120.0**	**6.3**	**RQC101100**	**113.97 x 2.62**
110.0	**123.0**	**8.3**	**RQC201100**	**117.07 x 3.53**
115.0	128.0	8.3	RQC201150	120,24 x 3,53
120.0	133.0	8.3	RQC201200	126.59 x 3.53
120.0	138.0	12.3	RQC301200	126.37 x 5.33
125.0	**138.0**	**8.3**	**RQC201250**	**129.77 x 3.53**
125.0	**143.0**	**12.3**	**RQC301250**	**132.72 x 5.33**
130.0	143.0	8.3	RQC201300	136.12 x 3.53
130.0	148.0	12.3	RQC301300	135.89 x 5.33
135.0	148.0	8.3	RQC201350	139.29 x 3.53
135.0	153.0	12.3	RQC301350	142.24 x 5.33
140.0	158.0	12.3	RQC301400	145.42 x 5.33
150.0	168.0	12.3	RQC301500	158.12 x 5.33
160.0	**173.0**	**8.3**	**RQC201600**	**164.69 x 3.53**
160.0	**178.0**	**12.3**	**RQC301600**	**164.47 x 5.33**
170.0	188.0	12.3	RQC301700	177.17 x 5.33
180.0	**198.0**	**12.3**	**RQC301800**	**183.52 x 5.33**
190.0	208.0	12.3	RQC301900	196.22 x 5.33
200.0	**218.0**	**12.3**	**RQC302000**	**208.92 x 5.33**
220.0	**238.0**	**12.3**	**RQC302200**	**227.97 x 5.33**
230.0	248.0	12.3	RQC302300	234.32 x 5.33
240.0	258.0	12.3	RQC302400	247.02 x 5.33
250.0	**258.0**	**12.3**	**RQC302500**	**253.37 x 5.33**
280.0	298.0	12.3	RQC302800	291.47 x 5.33
300.0	318.0	12.3	RQC303000	304.17 x 5.33
320.0	**338.0**	**12.3**	**RQC303200**	**329.57 x 5.33**
350.0	368.0	12.3	RQC303500	354.97 x 5.33
400.0	418.0	12.3	RQC304000	405.26 x 5.33
420.0	438.0	12.3	RQC304200	430.66 x 5.33
450.0	468.0	12.3	RQC304500	456.06 x 5.33
465.0	496.0	16.3	RQC404650	481.38 x 7.00
480.0	511.0	16.3	RQC404800	494.16 x 7.00
500.0	531.0	16.3	RQC405000	506.86 x 7.00
550.0	581.0	16.3	RQC405500	557.66 x 7.00
600.0	631.0	16.3	RQC406000	608.08 x 7.00
650.0	681.0	16.3	RQC406500	668.00 x 7.00
700.0	731.0	16.3	RQC407000	718.00 x 7.00
750.0	781.0	16.3	RQC407500	768.00 x 7.00
800.0	831.0	16.3	RQC408000	818.00 x 7.00
850.0	881.0	16.3	RQC408500	868.00 x 7.00
900.0	931.0	16.3	RQC409000	918.00 x 7.00
950.0	981.0	16.3	RQC409500	968.00 x 7.00
1000.0	1031.0	16.3	RQC4X1000	1018.00 x 7.00
1050.0	1081.0	16.3	RQC4X1050	1068.00 x 7.00
1200.0	1231.0	16.3	RQC4X1200	1218.00 x 7.00
1300.0	1331.0	16.3	RQC4X1300	1318.00 x 7.00
1400.0	1431.0	16.3	RQC4X1400	1418.00 x 7.00
1500.0	1531.0	16.3	RQC4X1500	1518.00 x 7.00
2000.0	2031.0	16.3	RQC4X2000	2018.00 x 7.00
2200.0	2231.0	16.3	RQC4X2200	2218.00 x 7.00

The rod diameters in **bold** type are in accordance with the recommendations of ISO 3320.

Other dimensions and all intermediate sizes up to 2200 mm diameter, including imperial (inch) sizes converted to mm, can be supplied.

Zurcon® Wynseal M

Double-acting

Rubber-energized plastic-faced seal

Material:
Turcon®, Zurcon® and Elastomer

Zurcon® Wynseal M

Description

Zurcon® Wynseal M for rod sealing is a modified machined version of the Zurcon® Wynseal design.

Zurcon® Wynseal M is a double-acting seal consisting of a Zurcon® or Turcon® seal ring and an O-Ring as energizing element - Figure 88.

The seal is designed with a seal edge profile. Two seal edges act as primary seal for pressures from both sides and prevent build-up of hydrodynamic pressure over the seal profile and the risk of blow-by effect. The central sealing and supporting rib increases the sealing effect *.

Radial notches are provided on both sides to provide activation of the energizing O-Ring. These ensure direct pressure loading of the seal under all operating conditions.

Installation groove is identical to that of Turcon® Glyd Ring® .

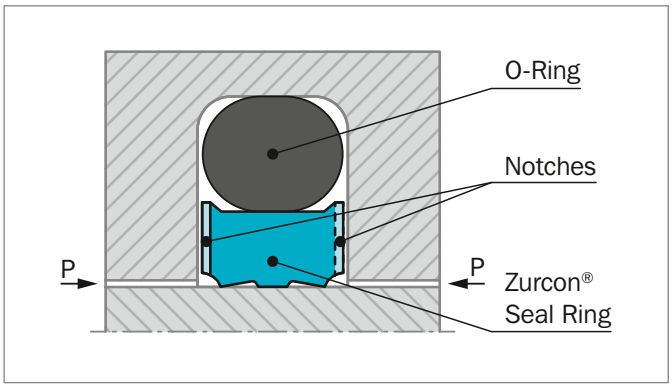

Figure 88: Zurcon® Wynseal M

* Only from RW52 and the following Series No.; RW50 is without seal edge profile and RW51 is without supporting rib.

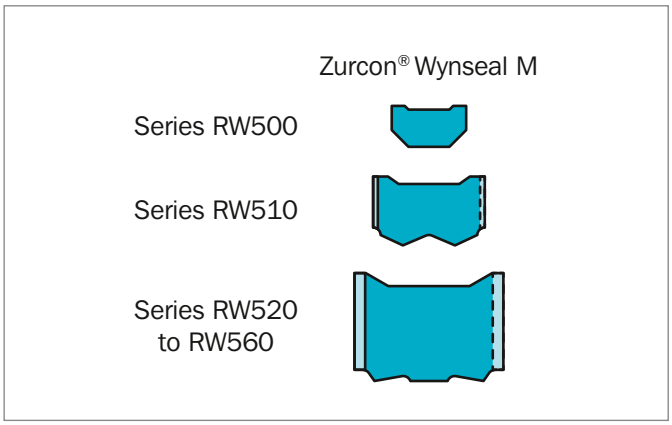

Figure 89: Zurcon® Wynseal M series profile

ADVANTAGES

- High static and dynamic sealing effect
- High abrasion resistance (Zurcon® materials)
- Simple groove design, one-piece piston possible
- Diameter range - from 3 to 2600 mm
- Fits Stepseal® 2K groove as well as ISO 7425-2 seal housing
- Low friction
- Higher temperature (Turcon® materials)
- Higher pressure
- High chemical resistance

APPLICATION EXAMPLES

Zurcon® Wynseal M is used as double acting rod seal for hydraulic components in applications such as:

- Machine tools
- Forklifts & handling machinery
- Agriculture
- Industrial hydraulics light to medium duty

OPERATING CONDITIONS

Pressure:	Up to 50 MPa
Speed:	Up to 10 m/s
Temperature:	-45 °C to +200 °C depending on seal and O-Ring material
Media:	Mineral oil-based hydraulic fluids, flame retardant hydraulic fluids, environmentally friendly hydraulic fluids (bio-oils), phosphate ester, water and others, depending on temperature, seal and O-Ring material compatibility - see Table 75.
Clearance:	The maximum permissible radial clearance S_{max} is shown in Table 76, as a function of the operating pressure and functional diameter.

IMPORTANT NOTE

The above data are maximum values and cannot be used at the same time, e.g. the maximum operating speed depends on material type, pressure, temperature and gap value. Temperature range also depends on media.

INSTALLATION INSTRUCTIONS

Wynseal® M is installed according to information on page 31 to page 32.

Closed groove installation applies same dimensions as for Turcon® Stepseal® 2K in Table 6 page 32.

RECOMMENDED MATERIALS

The following material combinations have proven effective for hydraulic applications:

Turcon® Wynseal M in Zurcon® Z52
For light to medium hydraulic applications with linear movements in mineral oils and other media with good lubrication:

O-Ring:	NBR 70 Shore A N
Set code:	Z52N

Turcon® Wynseal M in Turcon® M12
All round material for light to heavy hydraulic applications with linear, short stroke or helical movements in mineral oils, flame retardant hydraulic fluids, phosphate ester, bio-oils or fluids having low lubricating properties:

O-Ring:	NBR 70 Shore A N FKM 70 Shore A V
Set code:	M12N or M12V

For specific applications, all Turcon® materials are available.

Other material combinations are listed in Table 75.

Table 75: Turcon® and Zurcon® Materials for Zurcon® Wynseal M

Material, Applications, Properties	Code	O-Ring Material Shore A	Code	O-Ring Operating Temp.* °C	Mating Surface Material	MPa max. Dynamic
Turcon® M12 First material choice for seals in linear motion Overall improved properties For new constructions and updating For all commonly applied hydraulic fluids including fluids with low lubrication performance Lowest friction and best sliding properties Lowest wear on seals Improved absorption of abrasive contaminants Low wear or abrasion of counter surface BAM tested Mineral fiber and Additives filled Color: Dark gray	M12	NBR 70	N	-30 to +100	Steel Steel hardened Steel chrome plated (rod) Steel plated (rod) Cast iron Stainless steel Titanium	35
		NBR 70 Low temp.	T	-45 to +80		
		FKM 70	V	-10 to +200		
Turcon® T08 For lubricating fluids and linear motion Very high compressive strength and extrusion resistance Hard counter surfaces is recommended Bronze filled Color: Light to dark brown, which may have variations in shading	T08	NBR 70	N	-30 to +100	Steel hardened Steel chrome plated (rod) Cast iron	50
		NBR 70 Low temp.	T	-45 to +80		
		FKM 70	V	-10 to +200		
Turcon® T40 For lubricating and non-lubricating fluids High frequency and short strokes Water hydraulics Surface texture is not suitable for gas sealing Carbon fiber filled Color: Gray	T40	NBR 70	N	-30 to +100	Steel Steel hardened Steel chrome plated (rod) Cast iron Stainless steel Aluminum	25
		NBR 70 Low temp.	T	-45 to +80		
		FKM 70	V	-10 to +200		
		EPDM 70	E**	-45 to +145		
Turcon® T46 For lubricated hydraulics in linear motion High compressive strength High extrusion resistance Very good sliding and wear properties BAM tested Bronze filled Color: Light to dark brown, which may have variations in shading.	T46	NBR 70	N	-30 to +100	Steel hardened Steel chrome plated (rod) Cast iron	35
		NBR 70 Low temp.	T	-45 to +80		
		FKM 70	V	-10 to +200		

Table continues on next page

Material, Applications, Properties	Code	O-Ring Material Shore A	Code	O-Ring Operating Temp.* °C	Mating Surface Material	MPa max. Dyna-mic
Zurcon® Z51* **** For mineral oil based fluids Very high abrasion and extrusion resistance For counter surface with rougher surface finish Limited chemical resistance Max. working temperature +110 °C Cast polyurethane Color: Yellow to light-brown	Z51	NBR 70	N	-30 to +100	Steel Steel hardened Steel chrome plated (rod) Cast iron Stainless steel Ceramic coating	45
		NBR 70 Low temp.	T	-45 to +80		
Zurcon® Z52* **** For mineral oil based fluids High abrasion resistance For counter surface with rougher surface finish Good extrusion resistance Limited chemical resistance Max. working temperature +110 °C Cast polyurethane Color: Turquoise	Z52	NBR 70	N	-30 to +100	Steel Steel hardened Steel chrome plated (rod) Cast iron Stainless steel Ceramic coating	25
		NBR 70 Low temp.	T	-45 to +80		
Zurcon® Z80 For lubricating and non-lubricating fluids Water based fluids, air and gases Dry air pneumatics High abrasion and extrusion resistance For service in abrasive conditions and media with particles Good chemical resistance Limited temperature capability (-60 to +80 °C) UHMWPE (Ultra High Molecular Weight Polyethylene) Color: White to off-white	Z80	NBR 70	N	-30 to (+100)	Steel Steel hardened Steel chrome plated (rod) Stainless steel Aluminum Bronze Ceramic coating	30
		NBR 70 Low temp.	T	-45 to +80		
		EPDM 70	E**	-45 to (+145)		

* The O-Ring Operation Temperature is only valid in mineral hydraulic oil - except EPDM.

** Material not suitable for mineral oils.

*** Max. diameter 2200 mm

BAM Tested by "Bundesanstalt Materialprüfung, Germany"

Highlighted materials are recommended.

Installation Recommendation

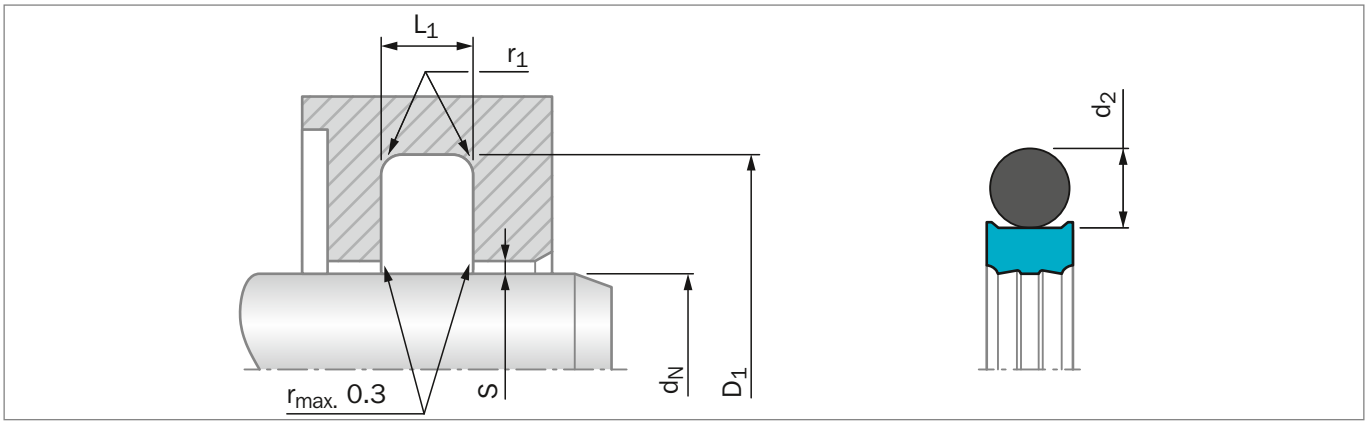

Figure 90: Installation Drawing

Table 76: Installation Dimensions - Standard Recommendations

Series No.	Rod Diameter d_N f8/h9		Groove Diameter*	Groove width	Radius	Radial Clearance S_{max}**			O-Ring Cross Section
	Standard Application	Available Range	D_1 H9	L_1 +0.2/-0	$r_{1\,max}$	10 MPa	20 MPa	40 MPa	d_2
RW500	3 - 7.9	3 - 130.0	d_N + 4.9	2.20	0.4	0.40	0.30	0.20	1.78
RW510	8 - 18.9	8 - 250.0	d_N + 7.3	3.20	0.6	0.60	0.50	0.30	2.62
RW520	19 - 37.9	8 - 450.0	d_N + 10.7	4.20	1.0	0.70	0.50	0.30	3.53
RW530	38 - 199.9	19 - 650.0	d_N + 15.1	6.30	1.3	0.80	0.60	0.40	5.33
RW540	200 - 255.9	38 - 650.0	d_N + 20.5	8.10	1.8	0.80	0.60	0.40	7.00
RW580	256 - 649.9	200 - 999.9	d_N + 24.0	8.10	1.8	0.90	0.70	0.50	7.00
RW550	650 - 999.9	256 - 999.9	d_N + 27.3	9.50	2.5	1.00	0.80	0.60	8.40
RW55X	1000 - 1200	-	d_N + 27.3	9.50	2.5	1.00	0.80	0.60	8.40
RW560***	-	650 - 999.9	d_N + 38.0	13.80	3.0	1.20	0.90	0.70	12.00
RW56X***	1000 - 2600****	-	d_N + 38.0	13.80	3.0	1.20	0.90	0.70	12.00

* Installation with groove dimensions to ISO 7425-2 is also recommended.
** At pressures > **40 MPa** use diameter tolerance H8/f8 (bore/rod) in the area of the seal or consult your local Trelleborg Sealing Solutions marketing company for alternative material or profiles.
Slydring® / Wear Rings are not applicable at very small radial clearances please consult the Slydring® section in this catalog.
*** O-Rings with 12 mm cross section are delivered as special profile ring.
**** Z51 and Z52 max diameter 2200 mm

ORDERING EXAMPLE

Zurcon® Wynseal M complete with O-Ring, standard application;

Series:	RW540 from Table 76
Rod Diameter:	d_N = 250.0 mm
TSS Part No.:	RW5402500 from Table 77

Select the material from Table 75. The corresponding code numbers are appended to the TSS Part No. Together these form the TSS Article Number.
The TSS Article Number for all intermediate sizes can be determined by following the example:

TSS Article No. RW54 0 2500 - M12 N

- Series No. — RW54
- Type (Standard) — 0
- Rod Diameter x 10***** — 2500
- Quality Index (Standard) — -
- Material Code (Seal Ring) — M12
- Material Code (O-Ring) — N

***** For diameters $d_N \geq 1000.0$ mm multiply only by factor 1.
Example: RW56X for diameter d_N = 1200.0 mm
TSS Article No.: RW56X1200 - M12N

Table 77: Installation Dimensions / TSS Part No.

Rod Dia. d_N f8/h9	Groove Dia. D_1 H9	Groove Width L_1 +0.2	TSS Part No.	O-Ring Size
3.0	7.9	2.2	RW5000030	4.47 x 1.78
4.0	**8.9**	**2.2**	**RW5000040**	**5.60 x 1.80**
5.0	**9.9**	**2.2**	**RW5000050**	**6.70 x 1.80**
6.0	**10.9**	**2.2**	**RW5000060**	**7.65 x 1.78**
8.0	**12.9**	**2.2**	**RW5000080**	**9.50 x 1.80**
8.0	**15.3**	**3.2**	**RW5100080**	**10.77 x 2.62**
10.0	**14.9**	**2.2**	**RW5000100**	**11.80 x 1.80**
10.0	**17.3**	**3.2**	**RW5100100**	**12.37 x 2.62**
12.0	**16.9**	**2.2**	**RW5000120**	**13.20 x 1.80**
12.0	**19.3**	**3.2**	**RW5100120**	**14.50 x 2.65**
14.0	**18.9**	**2.2**	**RW5000140**	**15.60 x 1.78**
14.0	**21.3**	**3.2**	**RW5100140**	**17.12 x 2.62**
15.0	19.9	2.2	RW5000150	17.17 x 1.78
15.0	22.3	3.2	RW5100150	17.12 x 2.62
16.0	20.9	2.2	RW5000160	17.17 x 1.78
16.0	**23.3**	**3.2**	**RW5100160**	**18.72 x 2.62**
18.0	**22.9**	**2.2**	**RW5000180**	**19.00 x 1.80**
18.0	**25.3**	**3.2**	**RW5100180**	**20.29 x 2.62**
20.0	**27.3**	**3.2**	**RW5100200**	**21.89 x 2.62**
20.0	**30.7**	**4.2**	**RW5200200**	**23.40 x 3.53**
22.0	**29.3**	**3.2**	**RW5100220**	**25.07 x 2.62**
22.0	**32.7**	**4.2**	**RW5200220**	**26.58 x 3.53**
25.0	**32.3**	**3.2**	**RW5100250**	**26.64 x 2.62**
25.0	**35.7**	**4.2**	**RW5200250**	**29.75 x 3.53**
28.0	**35.3**	**3.2**	**RW5100280**	**29.82 x 2.62**
28.0	**38.7**	**4.2**	**RW5200280**	**32.92 x 3.53**
30.0	37.3	3.2	RW5100300	32.99 x 2.62
30.0	40.7	4.2	RW5200300	34.52 x 3.53
32.0	**39.3**	**3.2**	**RW5100320**	**34.59 x 2.62**
32.0	**42.7**	**4.2**	**RW5200320**	**36.09 x 3.53**
35.0	42.3	3.2	RW5100350	37.77 x 2.62
35.0	45.7	4.2	RW5200350	37.69 x 3.53
36.0	**43.3**	**3.2**	**RW5100360**	**39.34 x 2.62**
36.0	**46.7**	**4.2**	**RW5200360**	**40.87 x 3.53**
40.0	**50.7**	**4.2**	**RW5200400**	**44.04 x 3.53**
40.0	**55.1**	**6.3**	**RW5300400**	**43.82 x 5.33**
42.0	52.7	4.2	RW5200420	47.22 x 3.53
42.0	57.1	6.3	RW5300420	46.99 x 5.33
45.0	**55.7**	**4.2**	**RW5200450**	**50.39 x 3.53**
45.0	**60.1**	**6.3**	**RW5300450**	**50.17 x 5.33**

Rod Dia. d_N f8/h9	Groove Dia. D_1 H9	Groove Width L_1 +0.2	TSS Part No.	O-Ring Size
48.0	58.7	4.2	RW5200480	51.50 x 3.55
48.0	63.1	6.3	RW5300480	53.34 x 5.33
50.0	**60.7**	**4.2**	**RW5200500**	**53.57 x 3.53**
50.0	**65.1**	**6.3**	**RW5300500**	**56.52 x 5.33**
52.0	62.7	4.2	RW5200520	56.74 x 3.53
52.0	67.1	6.3	RW5300520	56.52 x 5.33
55.0	65.7	4.2	RW5200550	59.92 x 3.53
55.0	70.1	6.3	RW5300550	59.69 x 5.33
56.0	**66.7**	**4.2**	**RW5200560**	**59.92 x 3.53**
56.0	**71.1**	**6.3**	**RW5300560**	**59.69 x 5.33**
60.0	70.7	4.2	RW5200600	63.09 x 3.53
60.0	75.1	6.3	RW5300600	66.04 x 5.33
63.0	**73.7**	**4.2**	**RW5200630**	**66.27 x 3.53**
63.0	**78.1**	**6.3**	**RW5300630**	**69.22 x 5.33**
65.0	80.1	6.3	RW5300650	69.22 x 5.33
70.0	80.7	4.2	RW5200700	75.79 x 3.53
70.0	**85.1**	**6.3**	**RW5300700**	**75.57 x 5.33**
75.0	85.7	4.2	RW5200750	78.97 x 3.53
75.0	90.1	6.3	RW5300750	81.92 x 5.33
80.0	**90.7**	**4.2**	**RW5200800**	**85.32 x 3.53**
80.0	**95.1**	**6.3**	**RW5300800**	**85.09 x 5.33**
85.0	100.1	6.3	RW5300850	91.44 x 5.33
90.0	**100.7**	**4.2**	**RW5200900**	**94.84 x 3.53**
90.0	**105.1**	**6.3**	**RW5300900**	**94.62 x 5.33**
95.0	105.7	4.2	RW5200950	101.19 x 3.53
95.0	110.1	6.3	RW5300950	100.97 x 5.33
100.0	**110.7**	**4.2**	**RW5201000**	**104.37 x 3.53**
100.0	**115.1**	**6.3**	**RW5301000**	**107.32 x 5.33**
105.0	115.7	4.2	RW5201050	110.72 x 3.53
105.0	120.1	6.3	RW5301050	110.49 x 5.33
110.0	**120.7**	**4.2**	**RW5201100**	**113.89 x 3.53**
110.0	**125.1**	**6.3**	**RW5301100**	**116.84 x 5.33**
110.0	**130.5**	**8.1**	**RW5401100**	**116.84 x 7.00**
115.0	125.7	4.2	RW5201150	120.24 x 3.53
115.0	130.1	6.3	RW5301150	120.02 x 5.33
120.0	130.7	4.2	RW5201200	123.42 x 3.53
120.0	135.1	6.3	RW5301200	126.37 x 5.33
125.0	**135.7**	**4.2**	**RW5201250**	**129.77 x 3.53**
125.0	**140.1**	**6.3**	**RW5301250**	**129.54 x 5.33**
130.0	140.7	4.2	RW5201300	136.12 x 3.53

Rod Dia. d_N f8/h9	Groove Dia. D_1 H9	Groove Width L_1 +0.2	TSS Part No.	O-Ring Size
130.0	145.1	6.3	RW5301300	135.89 x 5.33
135.0	145.7	4.2	RW5201350	139.29 x 3.53
135.0	150.1	6.3	RW5301350	139.07 x 5.33
140.0	**150.7**	**4.2**	**RW5201400**	**145.64 x 3.53**
140.0	**155.1**	**6.3**	**RW5301400**	**145.42 x 5.33**
145.0	155.7	4.2	RW5201450	148.82 x 3.53
145.0	160.1	6.3	RW5301450	151.77 x 5.33
150.0	165.1	6.3	RW5301500	158.12 x 5.33
160.0	**175.1**	**6.3**	**RW5301600**	**164.47 x 5.33**
160.0	**180.5**	**8.1**	**RW5401600**	**170.82 x 7.00**
165.0	180.1	6.3	RW5301650	170.82 x 5.33
170.0	180.7	4.2	RW5201700	177.39 x 3.53
170.0	185.1	6.3	RW5301700	177.17 x 5.33
175.0	190.1	6.3	RW5301750	183.52 x 5.33
180.0	**190.7**	**4.2**	**RW5201800**	**183.74 x 3.53**
180.0	**195.1**	**6.3**	**RW5301800**	**183.52 x 5.33**
180.0	**200.5**	**8.1**	**RW5401800**	**189.87 x 7.00**
190.0	200.7	4.2	RW5201900	196.44 x 3.53
190.0	205.1	6.3	RW5301900	196.22 x 5.33
200.0	215.1	6.3	RW5302000	208.92 x 5.33
200.0	**220.5**	**8.1**	**RW5402000**	**208.90 x 7.00**
210.0	225.1	6.3	RW5302100	215.27 x 5.33
220.0	**235.1**	**6.3**	**RW5302200**	**227.97 x 5.33**
220.0	**240.5**	**8.1**	**RW5402200**	**227.97 x 7.00**
230.0	245.1	6.3	RW5302300	234.32 x 5.33
230.0	250.5	8.1	RW5402300	240.67 x 7.00
240.0	255.1	6.3	RW5302400	247.02 x 5.33
240.0	260.5	8.1	RW5402400	253.37 x 7.00
250.0	**270.5**	**8.1**	**RW5402500**	**266.07 x 7.00**
260.0	284.0	8.1	RW5802600	266.07 x 7.00
270.0	290.5	8.1	RW5402700	278.77 x 7.00
270.0	294.0	8.1	RW5802700	278.77 x 7.00
280.0	300.5	8.1	RW5402800	291.47 x 7.00
280.0	**304.0**	**8.1**	**RW5802800**	**291.47 x 7.00**
300.0	324.0	8.1	RW5803000	316.87 x 7.00
320.0	**344.0**	**8.1**	**RW5803200**	**329.57 x 7.00**
350.0	370.5	8.1	RW5403500	354.97 x 7.00
350.0	374.0	8.1	RW5803500	367.67 x 7.00
360.0	**384.0**	**8.1**	**RW5803600**	**367.67 x 7.00**
400.0	420.5	8.1	RW5404000	405.26 x 7.00

Rod Dia. d_N f8/h9	Groove Dia. D_1 H9	Groove Width L_1 +0.2	TSS Part No.	O-Ring Size
400.0	424.0	8.1	RW5804000	417.96 x 7.00
450.0	474.0	8.1	RW5804500	468.76 x 7.00
500.0	524.0	8.1	RW5805000	506.86 x 7.00
550.0	574.0	8.1	RW5805500	557.66 x 7.00
600.0	624.0	8.1	RW5806000	608.08 x 7.00
650.0	677.3	9.5	RW5506500	663.00 x 8.40
700.0	724.0	8.1	RW5807000	712.00 x 8.40
800.0	827.3	9.5	RW5508000	813.00 x 8.40
900.0	927.3	9.5	RW5509000	913.00 x 8.40
1000.0	1027.3	9.5	RW55X1000	1013.00 x 8.40
1000.0	1038.0	13.8	RW56X1000	1016.00 x 12.00
1100.0	1138.0	13.8	RW56X1100	1116.00 x 12.00
1200.0	1227.3	9.5	RW55X1200	1213.00 x 8.40
1200.0	1238.0	13.8	RW56X1200	1216.00 x 12.00
1300.0	1338.0	13.8	RW56X1300	1316.00 x 12.00
1500.0	1538.0	13.8	RW56X1500	1516.00 x 12.00
2000.0	2038.0	13.8	RW56X2000	2016.00 x 12.00
2600.0	2638.0	13.8	RW56X2600	2616.00 x 12.00

The rod diameters in **bold** type are in accordance with the recommendations of ISO 3320.

Other dimensions and all intermediate sizes up to 2600 mm diameter including imperial (inch) sizes can be supplied.

All O-Rings with 12 mm cross section are delivered as special profile ring.

Turcon® Double Delta®

Double-acting

Rubber-energized plastic-faced seal

For O-Ring Grooves

Material:
Turcon®, Zurcon® and Elastomer

Turcon® Double Delta®

Description

Turcon® Double Delta® is a rubber energized plastic faced seal, designed to expand and significantly improve the service parameters of O-Rings. Double Delta® can be installed in existing O-Ring grooves.

Double Delta® combines the flexibility and responsiveness of O-Rings with the wear and friction characteristics of the Turcon® materials in dynamic applications.

The double-acting performance of the seal follows from the symmetrical cross section which allows the seal to respond to pressure in both directions - Figure 91.

Initial contact pressure is provided by radial compression of the O-Ring. When the system pressure is increased the O-Ring transforms this into additional contact pressure, the contact pressure of the seal is thereby automatically adjusted so sealing is ensured under all service conditions.

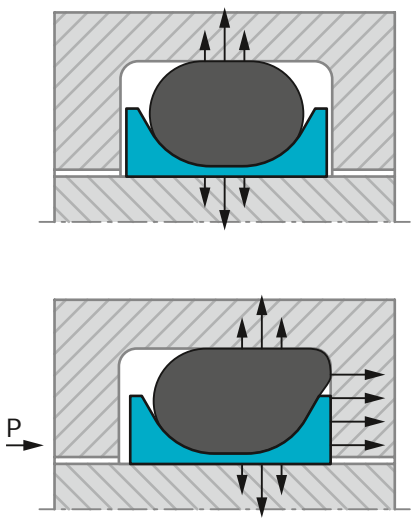

Figure 91: Turcon® Double Delta® without and with pressure

ADVANTAGES

- Compact groove dimensions and simple installation
- Low friction without stick-slip
- Resistance against wear and extrusion
- Rod seals available for all diameters from 2 to 999.9 mm
- Standard cross sections cover AS 568A and important metric O-Rings, other cross sections available on request.
- Fits also groove dimensions per ISO 6194 and AS 4716

APPLICATION EXAMPLES

Turcon® Double Delta® is used as double-acting seal for hydraulic and pneumatic components in applications such as:

- Machine tools
- Handling devices
- Valves
- Chemical processing equipment

It is particular recommended for light duty and small diameter applications.

OPERATING CONDITIONS

Pressure:	Up to 35 MPa
Speed:	Up to 15 m/s
Temperature:	-45 °C to +200 °C according to O-Ring material
Media:	Mineral oil-based hydraulic fluids, flame retardant hydraulic fluids, environmentally friendly hydraulic fluids (bio-oils), phosphate ester, water and others, depending on temperature, seal and O-Ring material compatibility - see Table 79
Clearance:	The maximum permissible radial clearance S_{max} is shown in Table 80, as a function of the operating pressure and functional diameter.

IMPORTANT NOTE

The above data are maximum values and cannot be used at the same time, e.g. the maximum operating speed depends on material type, pressure, temperature and gap value. Temperature range also depends on media.

NOTCH

Double Delta® is as standard supplied without radial notches, as the thin radial section of the seal gives good response to pressure variations.

For diameters from 2 mm, notches on both sides are optional. These ensure direct pressurizing of the seal under all operating conditions.

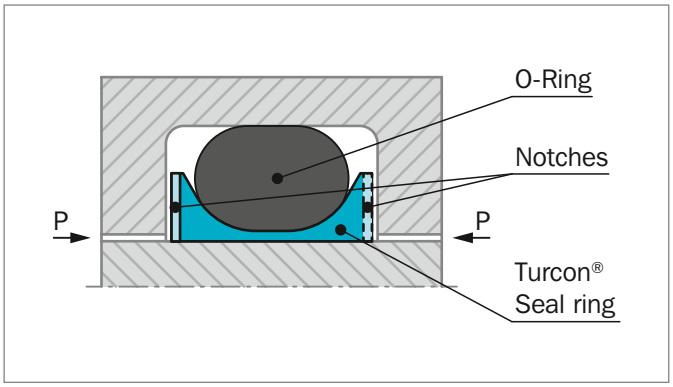

Figure 92: Turcon® Double Delta® with notches

INSTALLATION INSTRUCTIONS

Double Delta® is installed according to information on page 34.

RECOMMENDED MATERIALS

The following material combinations have proven effective for hydraulic applications:

Turcon® Double Delta ® in Turcon® M12
All round material for light to medium hydraulic applications with linear or helical movements in mineral oils, flame retardant hydraulic fluids, phosphate ester, bio-oils or fluids having low lubricating properties:

O-Ring:	NBR 70 Shore A	N
	FKM 70 Shore A	V
	EPDM 70 Shore A	E
Set code:	M12N, M12V or M12E	

Turcon® Double Delta® in Turcon® T46
For light to medium applications with linear movements in mineral oils and other media with good lubrication:

O-Ring:	NBR 70 Shore A	N
	FKM 70 Shore A	V
Set code:	T46N or T46V	

For specific applications, all Turcon® materials are available.

Other material combinations are listed in Table 78.

Table 78: Turcon® and Zurcon® Materials for Turcon® Double Delta®

Material, Applications, Properties	Code	O–Ring Material Shore A	Code	O-Ring Operating Temp.* °C	Mating Surface Material	MPa max. Dynamic
Turcon® M12 First material choice for seals in linear motion Overall improved properties For new constructions and updating For all commonly applpied hydraulic fluids including fluids with low lubrication performance Lowest friction and best sliding properties Lowest wear on seals Improved absorption of abrasive contaminants Low wear or abrasion of counter surface BAM tested Mineral fiber and Additives filled Color: Dark gray	M12	NBR 70	N	-30 to +100	Steel Steel hardened Steel chrome plated (rod Steel plated (rod) Cast iron Stainless Steel Titanium	35
		NBR 70 Low temp.	T	-45 to +80		
		FKM 70	V	-10 to +200		
Turcon® T05 For lubricating fluids Also for gas service Very low friction Very good sliding and sealing properties Color: Turquoise	T05	NBR 70	N	-30 to +100	Steel Steel hardened Steel chrome plated (rod)	20
		NBR 70 Low temp.	T	-45 to +80		
		FKM 70	V	-10 to +200		
Turcon® T24 For lubricating and non-lubricating hydraulic fluids Good sealing function Moderate extrusion resistance Carbon filled Color: Black	T24	NBR 70	N	-30 to +100	Steel Steel hardened Steel chrome plated (rod) Cast iron Stainless steel Aluminum	25
		NBR 70 Low temp.	T	-45 to +80		
		FKM 70	V	-10 to +200		
		EPDM 70	E**	-45 to +145		
Turcon® T46 For lubricated hydraulics in linear motion High compressive strength High extrusion resistance Very good sliding and wear properties BAM tested Bronze filled Color: Light to dark brown, which may have variations in shading	T46	NBR 70	N	-30 to +100	Steel hardened Steel chrome plated (rod) Cast iron	35
		NBR-70 Low temp.	T	-45 to +80		
		FKM 70	V	-10 to +200		

Table continues on next page

Material, Applications, Properties	Code	O–Ring Material Shore A	Code	O-Ring Operating Temp.* °C	Mating Surface Material	MPa max. Dyna-mic
Zurcon® Z80 For lubricating and non-lubricating fluids Water based fluids, air and gases Dry air pneumatics High abrasion and extrusion resistance For service in abrasive conditions and media with particles Good chemical resistance Limited temperature capability (-60 to +80 °C) UHMWPE (Ultra High Molecular Weight PE) Color: White to off-white	Z80	NBR 70	N	-30 to (+100)	Steel Steel hardened Steel chrome plated (rod) Stainless steel Aluminum Ceramic coating	30
		NBR 70 Low temp.	T	-45 to +80		
		EPDM 70	E**	-45 to(+145)		

* The O-Ring Operation Temperature is only valid in mineral hydraulic oil (except EPDM).

** Material not suitable for mineral oils.

BAM: Tested by "Bundesanstalt Materialprüfung, Germany"

Highlighted materials are recommended.

Installation Recommendation

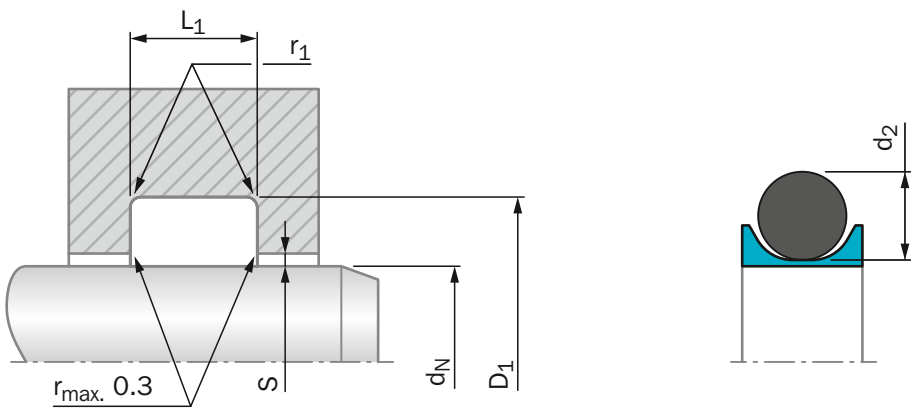

Figure 93: Installation Drawing

Table 79: Installation Dimensions

Series No.	Rod Diameter d_N f8/h9		Groove Diameter	Groove Width	Radius	Radial Clearance S_{max}*				O-Ring Cross Section
	Standard Application	Available Range	D_1 H9	L_1 +0.2	$r_{1\,max}$	2 MPa	10 MPa	20 MPa	35 MPa	d_2
RDD0	4 - 9.9	2 - 129.9	d_N + 2.9	2.4	0.4	0.10	0.10	0.08	0.05	1.78
RDD1	10 - 19.9	5 - 249.9	d_N + 4.5	3.6	0.4	0.15	0.15	0.10	0.07	2.62
RDD2	20 - 39.9	5 - 449.9	d_N + 6.2	4.8	0.6	0.25	0.20	0.15	0.08	3.53
RDD3	40 - 119.9	12 - 649.9	d_N + 9.4	7.1	0.8	0.35	0.25	0.20	0.10	5.33
RDD4	120 - 649.9	60 - 999.9	d_N + 12.2	9.5	0.8	0.50	0.30	0.25	0.15	7.00
RDD5	650 - 999.9	110 - 999.9	d_N + 15.0	10.0	1.0	0.60	0.40	0.30	0.20	8.40

*Slydring® / Wear Rings are not applicable at very small radial clearances please consult the Slydring® section in this catalog.

ORDERING EXAMPLE

Double Delta® complete with O-Ring, standard application;

Series:	RDD3 from Table 79
Rod diameter:	d_N = 80.0 mm
TSS Part No.:	RDD300800 from Table 80

Select the material from Table 78. The corresponding code numbers are appended to the Part No. Together these form the TSS Article Number.
For seals for other groove widths/dimensions please refer to Table 78.
The TSS Article Numer for all intermediate sizes can be determined by following the example:

TSS Article No. RDD3 0 0800 - T05 N

- TSS Series No. — RDD3
- Type (Standard)** — 0
- Rod Diameter x 10 — 0800
- Quality Index (Standard) — -
- Material Code (Seal Ring) — T05
- Material Code (O-Ring) — N

** "N" for seals with notches. Available at diameters from 2.0 mm.

Table 80: Installation Dimensions/TSS Part No.

Rod Dia. d_N h9	Groove Dia. D_1 H9	Groove Width L_1 +0.2	TSS Part No.	O-Ring Size
3.0	5.9	2.4	RDD000030	2.90 x 1.78
4.0	**6.9**	**2.4**	**RDD000040**	**3.68 x 1.78**
5.0	**7.9**	**2.4**	**RDD000050**	**4.80 x 1.80**
6.0	**8.9**	**2.4**	**RDD000060**	**5.60 x 1.80**
8.0	**10.9**	**2.4**	**RDD000080**	**7.65 x 1.78**
9.9	**12.8**	**2.4**	**RDD000099**	**9.50 x 1.80**
10.0	**14.5**	**3.6**	**RDD100100**	**10.77 x 2.62**
12.0	**16.5**	**3.6**	**RDD100120**	**12.37 x 2.62**
14.0	**18.5**	**3.6**	**RDD100140**	**13.94 x 2.62**
15.0	19.5	3.6	RDD100150	14.50 x 2.65
16.0	**20.5**	**3.6**	**RDD100160**	**15.54 x 2.62**
18.0	**22.5**	**3.6**	**RDD100180**	**18.00 x 2.65**
20.0	**26.2**	**4.8**	**RDD200200**	**20.22 x 3.53**
22.0	**28.2**	**4.8**	**RDD200220**	**21.82 x 3.53**
25.0	**31.2**	**4.8**	**RDD200250**	**25.00 x 3.53**
28.0	**34.2**	**4.8**	**RDD200280**	**28.17 x 3.53**
30.0	36.2	4.8	RDD200300	29.75 x 3.53
32.0	**38.2**	**4.8**	**RDD200320**	**31.35 x 3.53**
35.0	41.2	4.8	RDD200350	34.52 x 3.53
36.0	**42.2**	**4.8**	**RDD200360**	**36.09 x 3.53**
40.0	**49.4**	**7.1**	**RDD300400**	**40.64 x 5.33**
42.0	51.4	7.1	RDD300420	43.82 x 5.33
45.0	**54.4**	**7.1**	**RDD300450**	**43.82 x 5.33**
48.0	57.4	7.1	RDD300480	46.99 x 5.33
50.0	**59.4**	**7.1**	**RDD300500**	**50.17 x 5.33**
52.0	61.4	7.1	RDD300520	53.34 x 5.33
55.0	64.4	7.1	RDD300550	56.52 x 5.33
56.0	**65.4**	**7.1**	**RDD300560**	**56.52 x 5.33**
60.0	69.4	7.1	RDD300600	59.69 x 5.33
63.0	**72.4**	**7.1**	**RDD300630**	**62.87 x 5.33**
65.0	74.4	7.1	RDD300650	66.04 x 5.33
70.0	**79.4**	**7.1**	**RDD300700**	**69.22 x 5.33**
80.0	**89.4**	**7.1**	**RDD300800**	**78.74 x 5.33**
85.0	94.4	7.1	RDD300850	85.09 x 5.33
90.0	**99.4**	**7.1**	**RDD300900**	**91.44 x 5.33**
95.0	104.4	7.1	RDD300950	94.62 x 5.33
100.0	**109.4**	**7.1**	**RDD301000**	**100.97 x 5.33**
105.0	114.4	7.1	RDD301050	104.14 x 5.33
110.0	**119.4**	**7.1**	**RDD301100**	**110.49 x 5.33**
115.0	124.4	7.1	RDD301150	116.84 x 5.33
120.0	132.2	9.5	RDD401200	120.02 x 7.00
125.0	**137.2**	**9.5**	**RDD401250**	**126.37 x 7.00**
130.0	142.2	9.5	RDD401300	129.54 x 7.00
135.0	147.2	9.5	RDD401350	135.89 x 7.00
140.0	**152.2**	**9.5**	**RDD401400**	**139.07 x 7.00**
150.0	162.2	9.5	RDD401500	148.59 x 7.00
160.0	**172.2**	**9.5**	**RDD401600**	**164.47 x 7.00**
170.0	182.2	9.5	RDD401700	170.82 x 7.00
180.0	**192.2**	**9.5**	**RDD401800**	**183.52 x 7.00**
190.0	202.2	9.5	RDD401900	189.87 x 7.00
200.0	**212.2**	**9.5**	**RDD402000**	**202.57 x 7.00**
210.0	222.2	9.5	RDD402100	208.90 x 7.00
220.0	**232.2**	**9.5**	**RDD402200**	**227.97 x 7.00**
230.0	242.2	9.5	RDD402300	240.67 x 7.00
240.0	252.2	9.5	RDD402400	240.67 x 7.00
250.0	**262.2**	**9.5**	**RDD402500**	**253.37 x 7.00**
280.0	**292.2**	**9.5**	**RDD402800**	**278.77 x 7.00**
300.0	312.2	9.5	RDD403000	304.17 x 7.00
320.0	**332.2**	**9.5**	**RDD403200**	**329.57 x 7.00**
350.0	362.2	9.5	RDD403500	354.97 x 7.00
360.0	**372.2**	**9.5**	**RDD403600**	**367.67 x 7.00**
400.0	412.2	9.5	RDD404000	405.26 x 7.00
500.0	512.2	9.5	RDD405000	506.86 x 7.00
600.0	612.2	9.5	RDD406000	608.08 x 7.00
650.0	665.0	10.0	RDD506500	650.00 x 8.40
700.0	715.0	10.0	RDD507000	700.00 x 8.40
800.0	815.0	10.0	RDD508000	800.00 x 8.40
900.0	915.0	10.0	RDD509000	900.00 x 8.40
950.0	965.0	10.0	RDD509500	950.00 x 8.40

The rod diameters in **bold** type correspond to the recommendations of ISO 3320.

TSS Part No. for other dimensions and **all** intermediate sizes up to 999.9 mm diameter including imperial (inch) sizes can be supplied.

Larger sizes up to 2600 mm available upon request.

Turcon® Double Delta® for one Back-up Ring groove

Double Delta® is available for designs where grooves for O-Ring with one Back-up Ring are used according to Table 81.

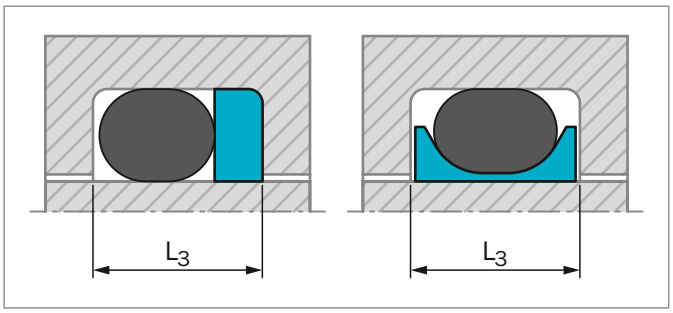

Figure 94: Groove width

Table 81: Seals for one Back-up Ring groove

Series No.	Groove Width	Execution Mark 5th digit		O-Ring Cross Section
	L_3	Without Notch	With Notch*	d_2
RDA0	3.80	0	N	1.78
RDA1	4.65	0	N	2.62
RDA2	5.70	0	N	3.53
RDA3	8.50	0	N	5.33
RDA4	11.20	0	N	7.00
RDA5	12.50	0	N	8.40

* Available for diameters from 8 mm

ORDERING EXAMPLE

Double Delta® complete with O-Ring, standard application;

Rod diameter:	d_N = 80.0 mm
Groove diameter:	89.4 mm
Groove width:	8.5 mm
TSS Article No.:	RDA300800-M12N

TSS Article No. RDA3 0 0800 - M12 N

TSS Series No.**
Type (Standard)***
Rod Diameter x 10
Quality Index (Standard)
Material Code (Seal Ring)****
Material Code (O-Ring)*****

** From Table 81 or Table 82
*** From Table 78
**** From Table 78
***** N for seals with notches, available from dia. 8 mm

Turcon® Double Delta® for Metric O-Rings

Double Delta® is available for installation in grooves for metric O-Rings as listed in Table 82.

Table 82: Rod Seals for Metric O-Ring Grooves

O-Ring Cross Section	Groove Diameter	Groove Width	Series No.	Execution Mark 5th digit		Available Range
d_2	D_1 H9	L_1 +0.2		Standard	Notch*	
2.00	d_N + 3.3	2.7	RD2A	0	N	3.0 - 100.0
2.40	d_N + 4.1	3.2	RD2E	0	N	5.0 - 160.0
2.50	d_N + 4.3	3.3	RD2F	0	N	5.0 - 160.0
3.00	d_N + 5.2	4.0	RD3A	0	N	6.0 - 200.0
4.00	d_N + 7.0	5.2	RD4A	0	N	8.0 - 300.0
5.00	d_N + 8.8	6.6	RD5A	0	N	12.0 - 400.0
5.70	d_N + 10.0	7.2	RD5H	0	N	12.0 - 649.9

* Available for diameters from 8 mm

Additional Seals

Available upon Request

Old Series

Special Series

POLYPAC® VA

Seal for high pressure volumetric water pump. It's made with a special grade NBR+FABRIC. High sealing efficiency and wear resistance.

Diameter Range mm	Pressure Range MPa	Temperature Range °C	Velocity m/s
15 - 70	Up to 40	Up to +80	Up to 2

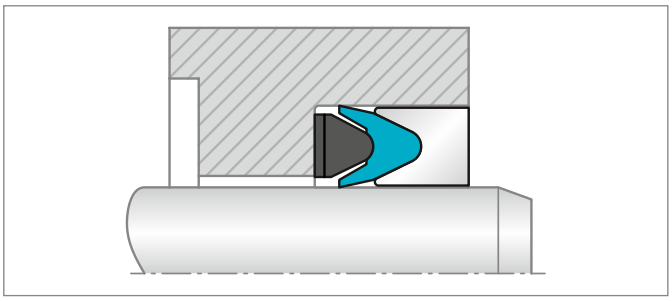

POLYPAC® VB

Seal for low pressure volumetric water pumps. It's made with a NBR rubber gasket clamped on a softer NBR+FABRIC V-ring shape. These seals in combination with VA seals for high pressure improve the performance of the sealing system in high pressure water pump applications.

Diameter Range mm	Pressure Range MPa	Temperature Range °C	Velocity m/s
13 - 60	-	Up to +80	Up to 2

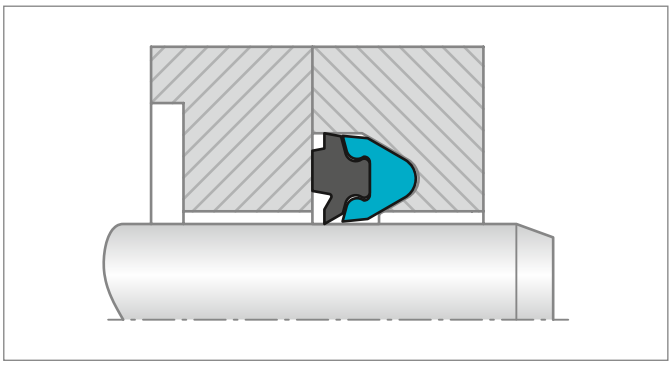

POLYPAC® DS - CX95 AND DS/TE - CX95

The seals DS and DS/TE are designed to improve the water cleaning equipment's performance.

The special profile can withstand the frequent pressure variations, high temperatures and critical lubrication. The U shaped sealing element is made out of cotton fabric reinforced NBR and provide with a NBR energizer ring a good sealing performance at high as low pressure working conditions. The version DS/TE with bronze filled PTFE Back-up Ring permits working at high pressures.

Diameter Range mm	Pressure Range MPa	Temperature Range °C	Velocity m/s
15 - 40	Up to 40 for DS/TE Up to 10 for DS	Up to +80	Up to 2

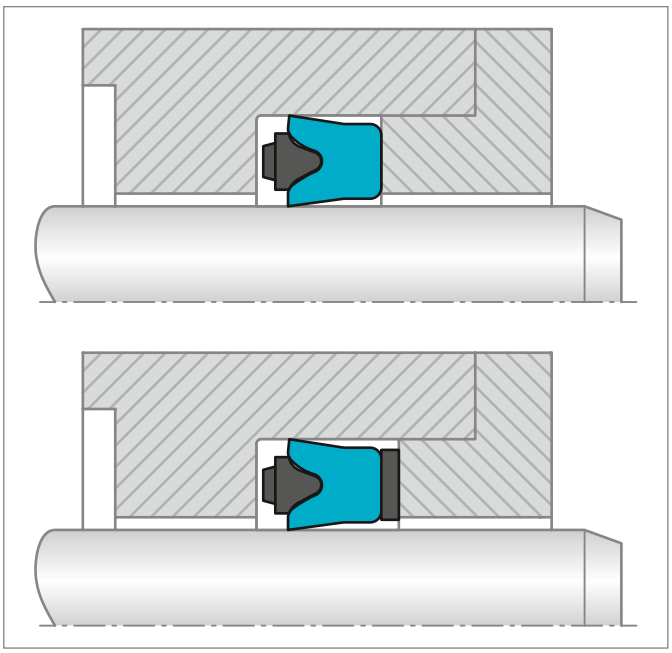

U-CUP RU0

Single lip U-Cup used as primarily seals for piston rods in hydraulic cylinders. U-Cups in polyurethane are proven elements, due to their good mechanical properties, for standard cylinder construction, particularly for mobile hydraulics under rough operating conditions.

Diameter Range mm	Pressure Range MPa	Temperature Range (Z20) °C	Velocity m/s
6 - 280	Up to 40	-35 to +110	Up to 0.5

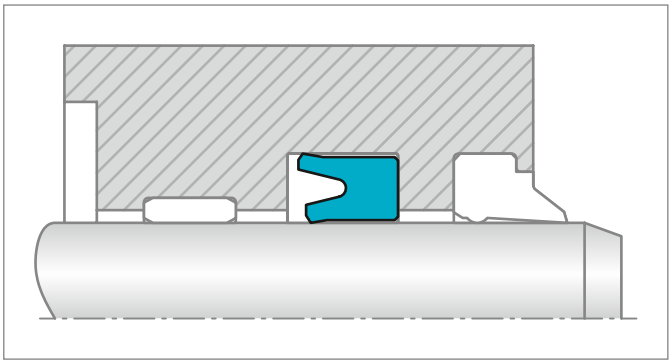

U-CUP RU3

Double lip U-Cup used as primarily seals for piston rods in hydraulic cylinders. U-Cups in polyurethane are proven elements, due to their good mechnical properties, for standard cylinder construction, particularily for mobile hydraulics under rough operating conditions.

Diameter Range mm	Pressure Range MPa	Temperature Range (Z20) °C	Velocity m/s
12 - 200	Up to 40	-35 to +110	Up to 0.5

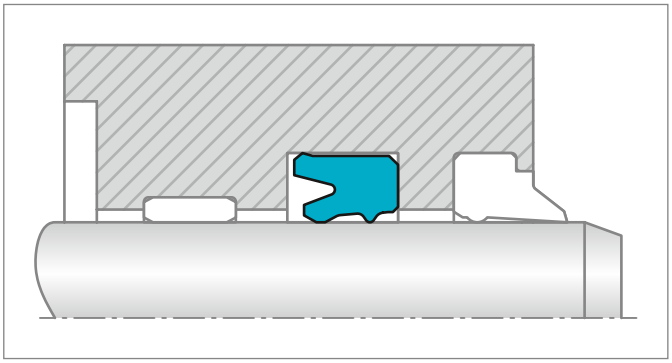

U-CUP RUB

These seals have a symmetrical configuration of the sealing lips and are mainly used in single acting or double acting standard hydraulic cylinders, particularily for mobile hydraulics under rough operating conditions.

Diameter Range mm	Pressure Range MPa	Temperature Range (Z20) °C	Velocity m/s
5 - 290	Up to 40	-35 to +110	Up to 0.5

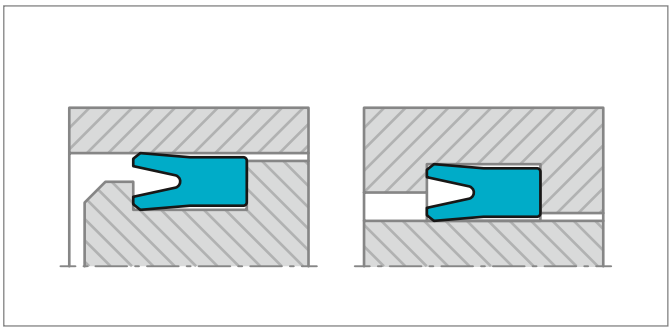

U-CUP RU1

Compact U-Cup of Zurcon® Polyurethane with only a dynamic sealing lip for small Installation Dimensions.

Diameter Range mm	Pressure Range MPa	Temperature Range (Z20) °C	Velocity m/s
10 - 170	Up to 40	-35 to +110	Up to 0.5

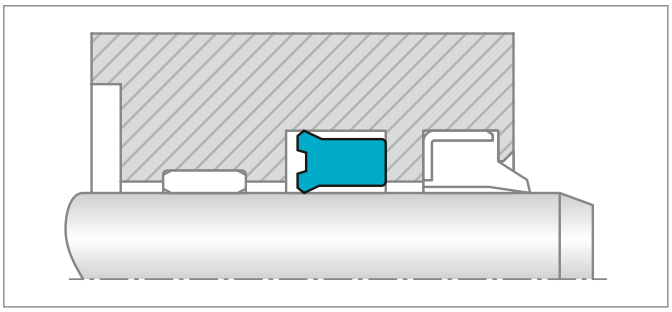

U-CUP RU2B

The compact U-Cup type RU2B is designed for small grooves. It is thus particularly suitable for use in space-saving designs. The compact form provides a high sealing effect even with low system pressures.

For larger gaps and high pressure peaks, the U-Cup RU2B has an integrated Back-up Ring.

Diameter Range mm	Pressure Range MPa	Temperature Range (Z20) °C	Velocity m/s
32 - 160	Up to 50	-35 to +110	Up to 0.5

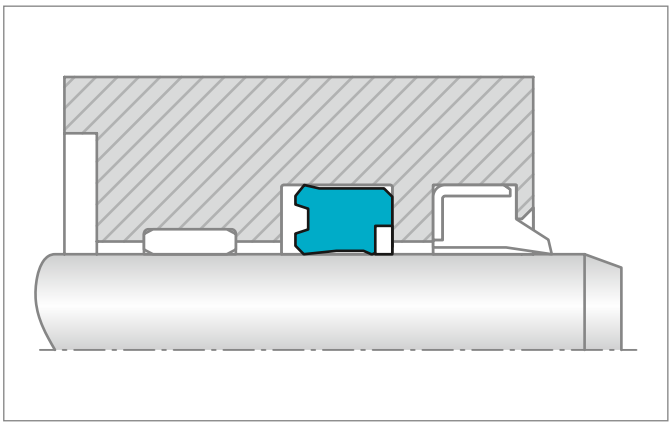

U-CUP RU3B

The U-Cup type RU3B is used as a rod seal for heavy-duty conditions in mobile and industrial hydraulics.

U-Cup RU3B has integrated Back-up Ring to prevent the seal material from extrusion at high temperatures and high peak pressures.

Diameter Range mm	Pressure Range MPa	Temperature Range (Z20) °C	Velocity m/s
40 - 171	Up to 50	-35 to +110	Up to 0.5

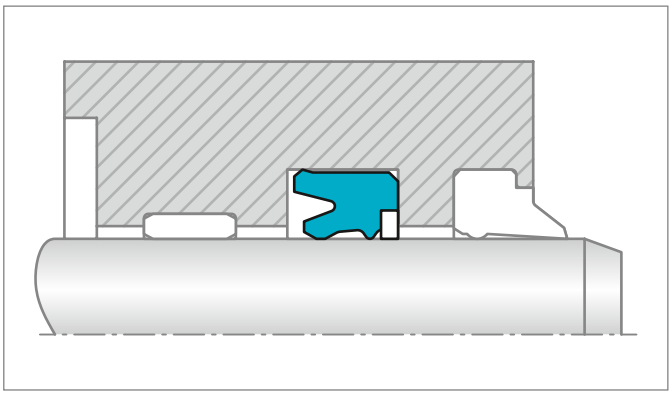

TURCON® STEPSEAL® 2A

Single-acting primary seal for applications requiring stabilized seal position in the groove. A further development of Turcon® Stepseal® 2K by adding a stabilizing edge, which prevents the seal from "tilting", cursed by seal-system pressure build-up between seals, in tandem configuration. It also increases assembly robustness through protection of the seal face during insertion of the rod.

Same high sealing properties as Stepseal® 2K.

Stepseal® 2A is used as primary seal in rod sealing systems preferably together with a secondary seal from the range of Turcon® and Zurcon® seals, a double-acting Excluder® or Scraper.

Installation in the same grooves as Turcon® Stepseal® 2K and grooves according to ISO 7425-2.

Diameter Range mm	Pressure Range MPa	Temperature Range °C	Velocity m/s
12 - 2600	60	-45 to +200	Up to 15

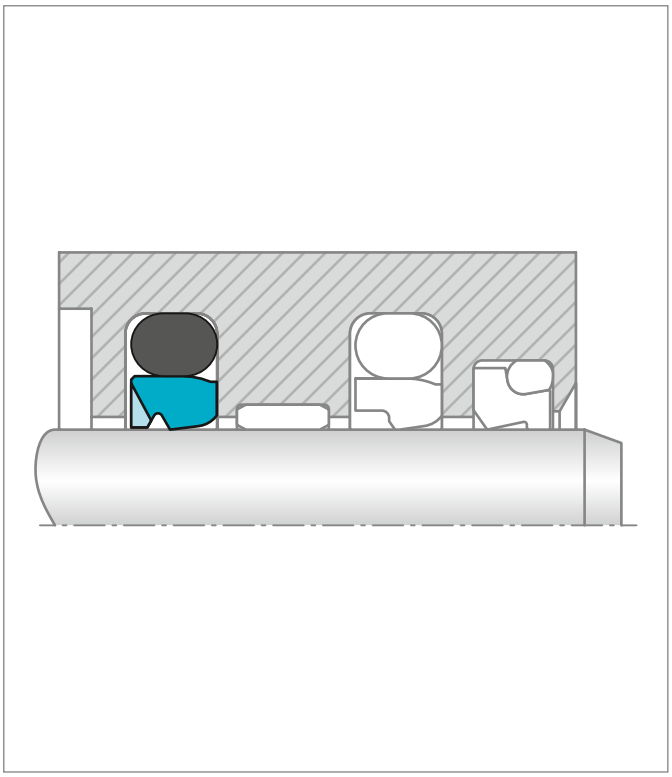

TURCON® STEPSEAL® 2A CR

Single-acting rubber energized rod seal with integrated Back-up Ring for higher pressure or bigger gaps for dynamic applications. High sealing efficiency, low friction with no stick-slip, minimal break out force and high wear resistance.

Installation in the same grooves as Turcon® Stepseal® 2K and grooves according to ISO 7425-2.

Standard TSS Part Numbers are available (RSB)

Diameter Range mm	Pressure Range MPa	Temperature Range °C	Velocity m/s
30 - 2600	100	-45 to +200	Up to 5

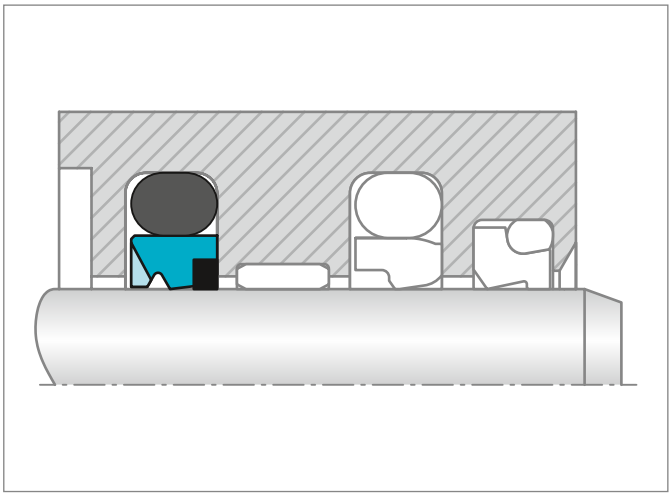

TURCON® GLYD RING® CR

Double-acting rubber energized rod seal for dynamic applications. Low friction with no stick-slip, minimal break out force and high wear resistance with integrated Back-up Rings for higher pressures or larger gaps. Installation in grooves with dimensions according to ISO 7425-2 (the same as for Turcon® Glyd Ring® for piston).

Standard TSS Part Numbers are available (RGR)

Diameter Range mm	Pressure Range MPa	Temperature Range °C	Velocity m/s
30 - 2600	100	-45 to +200	5

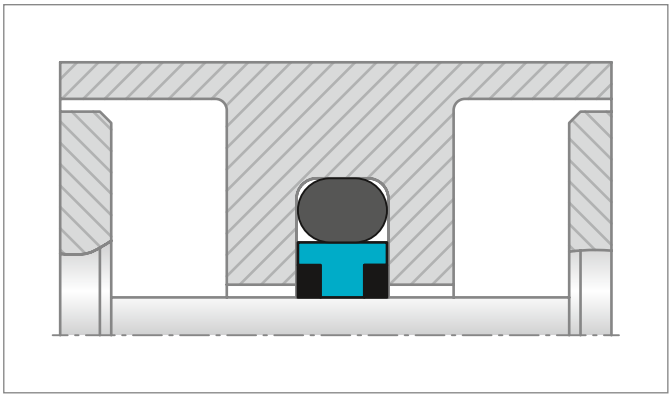

TURCON® AQ-SEAL® 5

A further development of the standard Turcon® AQ-Seal® double-acting seal for sealing between two media, e.g. fluid/gas separation by incorporating a limited footprint elastomer Quad-Ring® seal in the dynamic sealing face. Energized by two O-rings to improve sealing behaviour. Same groove dimensions as Turcon® AQ-Seal® 5 Bean Seal.

Standard TSS Part Numbers are available (RQ2)

Diameter Range mm	Pressure Range MPa	Temperature Range °C	Velocity m/s
40 - 700	60	-45 to +200	3

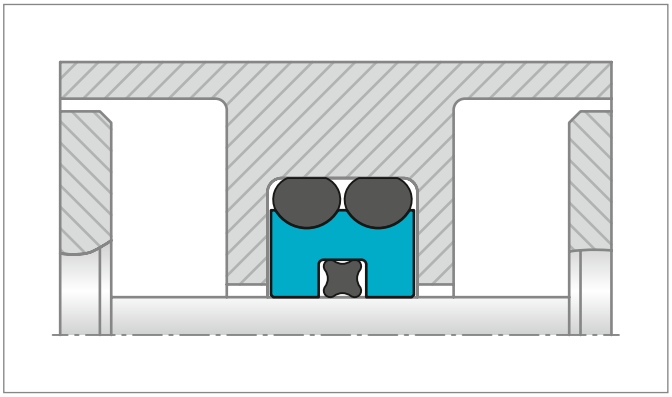

TURCON® AQ-SEAL®

A double-acting rubber energized seal for sealing between two media, e.g. fluid/gas seperation by incorporating a limited footprint elastomer Quad-Ring® seal inset into the dynamic sealing face. Installation in the same groove as Turcon® AQ-Seal® Bean Seal.

Standard TSS Part Numbers are available (RQ1)

Diameter Range mm	Pressure Range MPa	Temperature Range °C	Velocity m/s
16 - 2600	50	-45 to +200	2

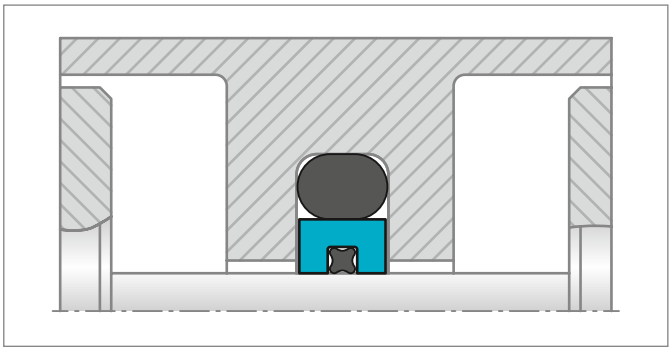

TURCON® VARISEAL® W

The Turcon® Variseal® W is a single acting rod seal energized by a special helical spring. The advantage of the Turcon® Variseal® W lies in its low friction and constant preloading force over a relatively large deformation range. The Turcon® Variseal® W is used wherever friction has to be kept within a narrow tolerance zone.

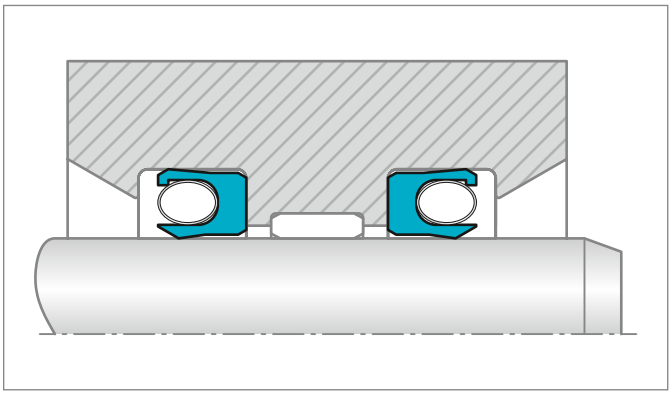

Diameter Range mm	Pressure Range MPa	Temperature Range °C	Velocity m/s
6 - 2600	45	-70 to +200	15

TURCON® VARISEAL® M2 CR

Single-acting sealing element comprising a U-shaped Turcon® ring and stainless energising finger spring. Low friction with no stick-slip, minimal break out force and high wear resistance. Resistant to most liquids and chemical. Unlimited shelf life. For higher pressure applications or larger extrusion gaps the Variseal® M2 CR has an integrated Back-up Ring in material Zurcon® Z43.

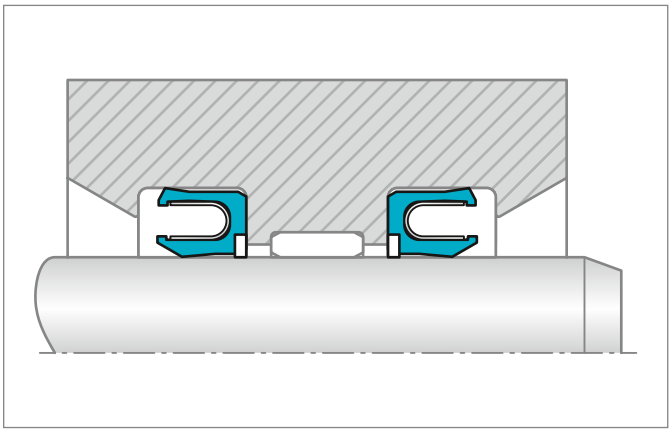

Diameter Range mm	Pressure Range MPa	Temperature Range °C	Velocity m/s
8 - 300	100	-30 to +260	15

TURCON® CAPTIVE GLYD RING®

A double-acting seal recommended for linear applications. It is designed to pass over holes/ports in the counter surface or to slide across mating surfaces that have dimensional changes from a small diameter with sealing function over the seal to a large diameter with no sealing function or vice versa. Split hardware is required and prevents the seal from pulling out the groove while passing over ports or variable diameter counter parts.

Standard TSS Part Numbers are available (RGC)

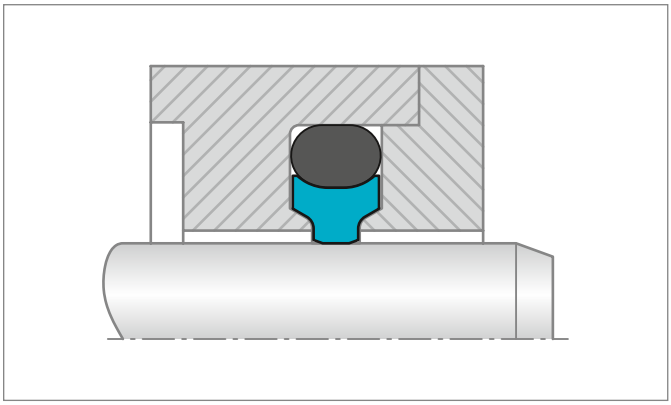

Diameter Range mm	Pressure Range MPa	Temperature Range °C	Velocity m/s
6 - 2600	Up to 60	-45 to +200	Up to 15

TURCON® BUFFER RING

Turcon® Buffer Ring is an uncut “Piston Ring”, with notches on one side, the Ring is a single-acting seal often used as protector of a common rod sealing system against peak pressures where the notch prevents risk of pressure trap.

If double-acting sealing is required it is necessary to install two Buffer Rings, back to back, to take the pressure from both sides.

For linear, helical and rotary movements.

Standard TSS Part Numbers are available (RFB)

Diameter Range mm	Pressure Range MPa	Temperature Range °C	Velocity m/s
4 - 2500	60	+30 to +160	Up to 15 (10 rotary)

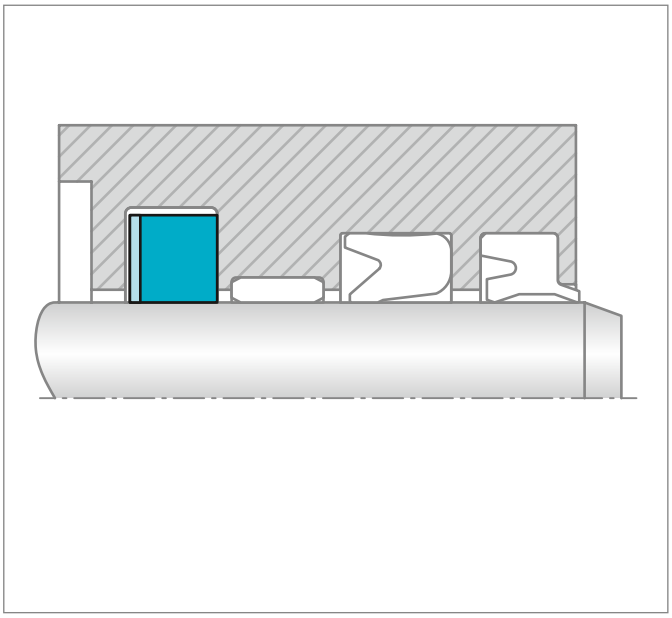

TURCON® STEPSEAL® SG

Single-acting O-Ring energized rod seal for dynamic applications. Generally applied as spare part or for heavy applications requiring seals in oversize cross section. Installation identical to ISO 7425-1 “Square Groove housings for pistons seals” (ISO for "Square Groove Housing" for rods does not exist) .

Turcon® materials provide low friction with no stick-slip, minimal break out force and high wear and pressure resistance.

Standard TSS Part Numbers are available (RSM)

Diameter Range mm	Pressure Range MPa	Temperature Range °C	Velocity m/s
20 - 2600	Up to 60	-45 to +200	Up to 5

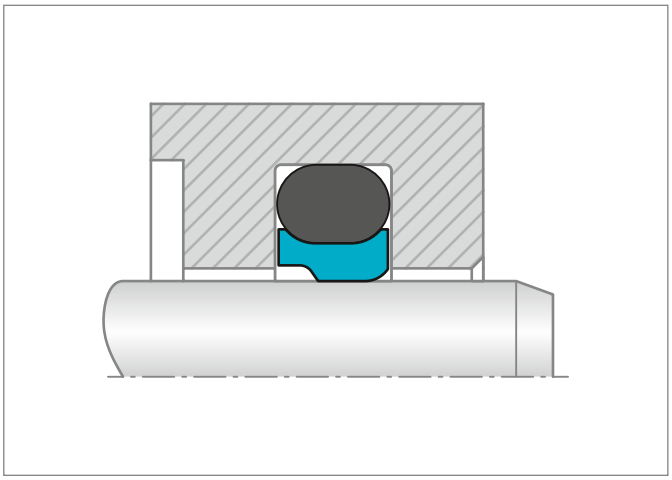

TURCON® GLYD RING® SG

Double-acting O-Ring energized rod seal for dynamic applications. Generally applied as spare part or for heavy applications requiring seals in oversize cross section. Installation identical to ISO 7425-1 “Square Groove housings for pistons seals”.

Turcon® materials provide low friction with no stick-slip, minimal break out force and high wear and pressure resistance.

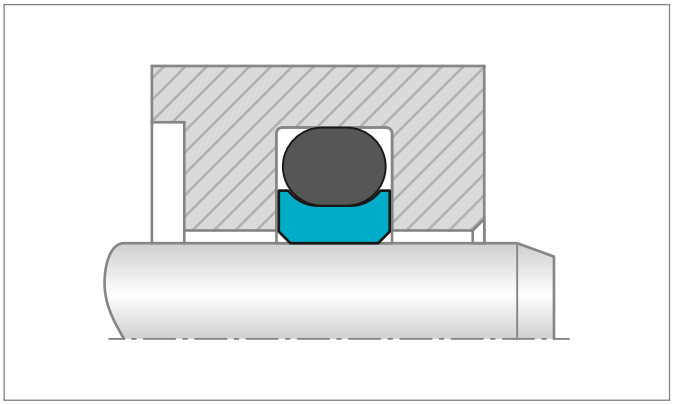

Standard TSS Part Numbers are available (RSM)

Diameter Range mm	Pressure Range MPa	Temperature Range °C	Velocity m/s
20 - 2600	Up to 60	-45 to +200	Up to 5

TURCON® CAPTIVE GLYD RING® WITH DOUBLE O-RING

A double-acting seal for linear applications recommended for passing over larger holes/ports in the counter surface or to slide across mating surfaces that have dimensional changes from a small diameter with sealing function over the seal to a large diameter with no sealing function or vice versa. Split hardware is required and prevents the seal from pulling out the groove while passing over ports or variable diameter counter parts.

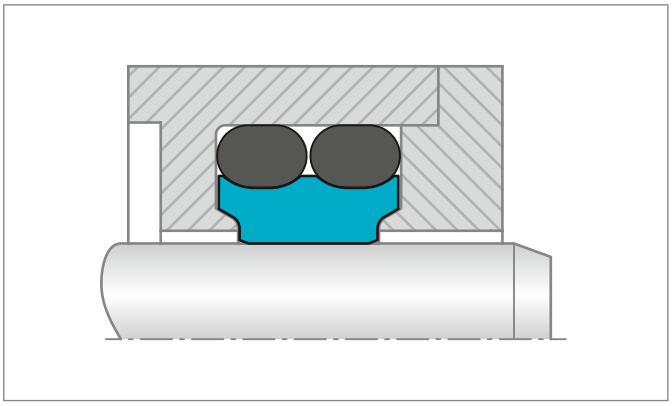

Diameter Range mm	Pressure Range MPa	Temperature Range °C	Velocity m/s
6 - 2600	Up to 60	-45 to +200	Up to 15

TURCON® CAPTIVE GLYD RING® CR

A double-acting corner reinforced seal for higher pressure linear applications recommended for passing over larger holes/ports in the counter surface or to slide across mating surfaces that have dimensional changes from a small diameter with sealing function over the seal to a large diameter with no sealing function or vice versa. Split hardware is required and prevents the seal from pulling out the groove while passing over ports or variable diameter counter parts.

Diameter Range mm	**Pressure Range** MPa	**Temperature Range** °C	**Velocity** m/s
6 - 2600	Up to 100	-45 to +200	Up to 15

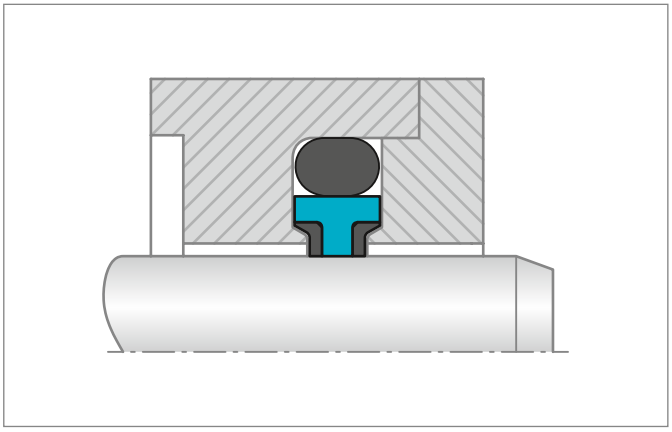

Piston Seals

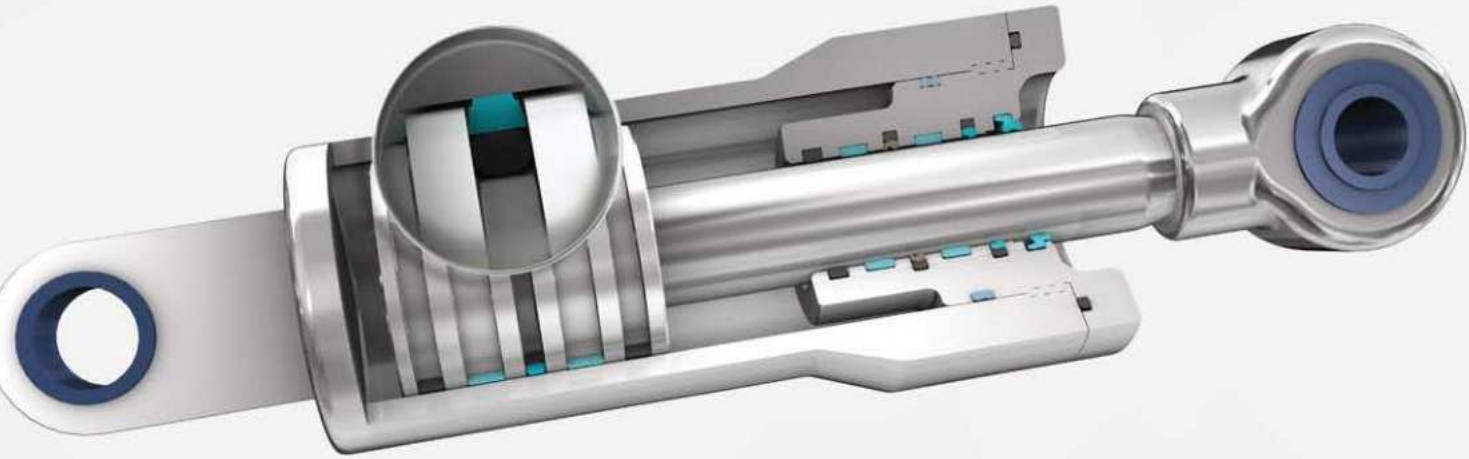

Contents

258	Choice of the Sealing Element
262	Design Instructions
264	Installation of Piston Seals
269	Turcon® Glyd Ring®
279	Turcon® Glyd Ring® T
289	Turcon® Glyd Ring® Hz
299	Zurcon® Glyd Ring® D
305	Zurcon® Glyd Ring® P
311	Turcon® AQ-Seal® 5
321	Turcon® AQ-Seal®
331	Turcon® Stepseal® 2K
341	Turcon® Stepseal® V
351	Turcon® Double Delta®
359	Turcon® Variseal® M2
367	Turcon® VL Seal®
377	Zurcon® U-Cup PUA
383	Zurcon® Wynseal
389	Zurcon® Wynseal M
399	POLYPAC® - PHD/P
405	Compact Seal POLYPAC® - Duopac DPS/DPC
413	POLYPAC® - Veepac CH
419	POLYPAC® - Veepac CH/G1
423	POLYPAC® - Selemaster DSM
429	Additional Seals

Choice of the Sealing Element

Sealing elements have a decisive influence on the design, function and service life of hydraulic and pneumatic cylinders and systems.

This applies equally to the piston seals where leak tightness, resistance to wear and gap extrusion, resistance to process media, resistance to high and low temperatures, low friction, compact form and simple installation are demanded in order to meet the requirements of industry for a functional sealing solution.

Trelleborg Sealing Solutions has developed a complete range of seals which, due to their optimized geometries, designs and use of high-quality materials such as Turcon® and Zurcon® , satisfy the technical and economic demands of the industry.

In order to select the most appropriate seal type and material, it is necessary to first define all the desired functional parameters. Table 83 can then be used to make an initial selection of seals according to the specific requirements of the application.

The second column of the table contains the number of the page on which further general information together with specific design and installation instructions on the particular seal type and materials (or material combinations with multi-element seals, e.g. Turcon® Glyd Ring® T) can be found.

Furthermore on page 263, attention is drawn to the quality of the mating surface. We recommend that the limits specified there be observed, as they have a decisive influence on the functionality and service life of the system.

The final choice of seal type and material must also take account of the detailed information on the seal elements.

Please do not hesitate to contact your local Trelleborg Sealing Solutions marketing company for further information on specific applications and special technical questions.

NOTE ON ORDERING

All multi-element standard piston seals, e.g. Glyd Ring® T, are generally supplied as complete seal sets. The set includes the seal and matching elastomer energizing elements. The O-Ring does not have to be ordered separately. It is also possible to use other O-Ring materials from our O-Ring catalog. In this case, please order the seal ring and O-Ring separately. We will inform you the sizes of the O-Ring on request.

When ordering the seal ring separately, it is then not necessary to mention the “O-Ring material code“ in the TSS Article No. shown in the ordering examples.

Older designs of seals no longer contained in this catalog naturally continue to be available (see chapter "Additional Seals"). For all new applications, however, we recommend the use of the seal types and preferred sizes (ISO series, wherever possible) listed in this catalog.

Other combinations of Turcon® materials and special designs can be developed and supplied for special applications in all sizes up to 2700 mm diameter, provided there is sufficient demand.

The sizes contained in this catalog are generally available from stock or can be supplied at short notice. We reserve the right to modify our supply programme.

Table 83: Selection Criteria for Piston Seals

Seal		Application				Standard	Size Range	Action		Technical Data*			Recommended Seal Material
										Temp. Range**	Speed	Pressure	
Type	Page	Field of Application	Light	Media	Heavy	ISO	mm	Single	Double	°C	m/s	MPa max.	
Turcon® Glyd Ring®	269	Mobile hydraulics	•	•	•	7425-1	8-2700		X	-45/ +200	15	50	M12
		Machine tools	•	•	•							50	T46
		Injection molding machines	•	•	•							20	T05
		Presses	•	•	•		8-2300			-45/ +110	2	60	Z51
Turcon® Glyd Ring® T	279	Mobile hydraulics	•	•	•	7425-1	8-2700		X	-45/ +200	15	40	M12
		Standard cylinders	•	•	•								
		Machine tools	•	•	•							50	T46
		Injection molding machines	•	•	•								
		Presses	•	•	•		8-2300			-45/ +110	2	60	Z51
		Automotive industry	•	•	•								
Turcon® Glyd Ring® Hz	289	Machine tools	•	•		7425-1	8-999	X	X	-45/ +200	15	30	M12
		Handling machinery	•	•								25	T40
		Servo equipment	•	•						-45/ +80	2	30	Z80
Zurcon® Glyd Ring® D	299	Earthmoving Equipment		•	•	7425-1 3320	30-250		X	-30/ +110	0.5	40	Z13
		Mobile hydraulics		•	•								
		Construction Machinery		•	•								
Zurcon® Glyd Ring® P	305	Earthmoving Equipment		•	•	7425-1 3320	45-200		X	-30/ +110	1	50	Z66 + NBR
		Mobile hydraulics		•	•								
		Construction Machinery		•	•								
Turcon® AQ-Seal® 5	311	Mobile hydraulics		•	•	-	40-700		X	-45/ +200	3	50	M12
		Holding cylinders		•	•								
		Piston accumulators		•	•							50	T46

* The data below are maximum values and cannot be used at the same time. The maximum pressure depends on temperature and gap dimension.
** Temperature range depends on choice of elastomer material and media.
In the case of Turcon® piston seals in unpressurized applications in temperatures below 0 °C, please contact your local Trelleborg Sealing Solutions marketing company for assistance!

Seal		Application				Standard	Size Range	Action		Technical Data*			Recommended Seal Material
										Temp. Range**	Speed	Pressure	
Type	Page	Field of Application	Light	Media	Heavy	ISO	mm	Single	Double	°C	m/s	MPa max.	
Turcon® AQ-Seal®	321	Standard cylinders	•	•		7425-1	15-700		X	-45/ +200	2	40	M12
		Piston accumulators	•	•								40	T46
		Fluid/gas separation	•	•									
		Holding cylinders	•	•									
Turcon® Stepseal® 2K	331	Mobile hydraulics	•	•	•	7425-1	8-2700	X		-45/ +200	15	50	M12
		Standard cylinders	•	•	•								
		Machine tools	•	•	•							50	T46
		Injection molding machines	•	•	•								
		Presses	•	•	•		8-2300			-45/ +110	2	60	Z51
Turcon® Stepseal® V	341	Mobile hydraulics	•	•	•	7425-1	15-2700	X		-45/ +200	15	50	M12
		Machine tools	•	•	•							50	T46
		Injection molding machines	•	•	•								
		Presses											
Turcon® Double Delta®	351	Machine tools	•	•		3601/ 3771 AS4716	5-2700		X	-45/ +200	15	20	T05
		Handling devices/ manipulators	•	•									
		Valves	•	•								35	M12
		Chemical industry	•	•								35	T46
Turcon® Variseal® M2	359	High and low temperatures	•	•		3771 AS4716	6-2500	X		-70/ +300	15	40	T40
		Aggresive media	•	•			6-2700					20	T05
		Foodstuffs	•	•									
Turcon® VL Seal®	367	Machine tools	•	•	•	3601/ 3771 AS4716	10-2700	X		-45/ +200	15	50	M12
		Automotive industry	•	•	•							50	T46
		Handling devices / manipulators	•	•	•		10-2300			-45/ +110	2	25	Z52
Zurcon® U-Cup PUA	377	Presses	•	•	•	-	16-250	X		-35/ +110	0.5	40	Z20
		Lift platforms	•	•	•								

* The data below are maximum values and cannot be used at the same time. The maximum pressure depends on temperature and gap dimension.
** Temperature range depends on choice of elastomer material and media.
In the case of Turcon® piston seals in unpressurized applications in temperatures below 0 °C, please contact your local Trelleborg Sealing Solutions marketing company for assistance!

Seal		Application				Standard	Size Range	Action		Technical Data*			Recommended Seal Material
										Temp. Range**	Speed	Pressure	
Type	Page	Field of Application	Light	Media	Heavy	ISO	mm	Single	Double	°C	m/s	MPa max.	
Zurcon® Wynseal	383	Standard cylinders	•	•		7425-1	12-300		X	-35/ +110	0.5	25	Z20
		Mobile hydraulics	•	•									
Zurcon® Wynseal M	389	Standard cylinders	•	•		7425-1	8-2300		X	-45/ +110	0.5	25	Z52
		Mobile hydraulics	•	•								45	Z51
		Handling machinery	•	•									
		Agriculture	•	•			8-2700			-45/ +200	10	35	M12
Compact Seal PHD/P	399	Mobile hydraulics	•	•	•	-	50-180		X	-35/ +110	0.5	35	Z20 + NBR + POM
		Excavators	•	•	•								
		Heavy duty hydraulic cylinders	•	•	•								
Duopac DPS / DPC	405	Mining equipment	•	•	•	-	40-250		X	-30/ +130	0.5	40	Fabric reinforced NBR + POM
		Presses	•	•	•								
		Steel mills	•	•	•								
		Water hydraulics	•	•	•								
Veepac CH	413	Presses	•	•	•	-	20-545	X		-30/ +130	0.5	40	Fabric reinforced Rubber + POM
		Steel mills	•	•	•								
		Ship hydraulics	•	•	•								
		Scrape shears	•	•	•								
		Civil engineering	•	•	•								
		Continuous casting	•	•	•								
		Special hydraulic cylinders	•	•	•								
		Water locks	•	•	•								
Veepac CH/G1	419	Mining equipment	•	•	•	-	40-250	X		-30/ +200	0.5	40	Fabric reinforced Rubber
		Excavators	•	•	•								
		Steel mills	•	•	•								
		Presses	•	•	•								
Selemaster DSM	423	Mining equipment	•	•	•	-	45-360		X	-30/ +130	0.5	70	Fabric reinforced Rubber + POM
		Excavators	•	•	•								
		Steel mills	•	•	•								
		Presses	•	•	•								

* The data below are maximum values and cannot be used at the same time. The maximum pressure depends on temperature and gap dimension.
** Temperature range depends on choice of elastomer material and media.
In the case of Turcon® piston seals in unpressurized applications in temperatures below 0 °C, please contact your local Trelleborg Sealing Solutions marketing company for assistance!

Design Instructions

LEAD-IN CHAMFERS

Piston seals are always fitted with an interference fit. In order to avoid damage during installation, lead-in chamfers and rounded edges must be provided on the cylinder barrel, see Figure 95. If this is not possible for design reasons, a separate installation tool must be used.

The minimum length of the lead-in chamfer Z_{min} depends on the profile size of the seal and can be seen from the following tables.

Generally $Z_{min.}$ from Table 84, Table 85 and Table 86 is recommended, but at 15° Z must also exceed 2.5% of the bore diameter D_N. At 20° Z is calculated correspondingly.

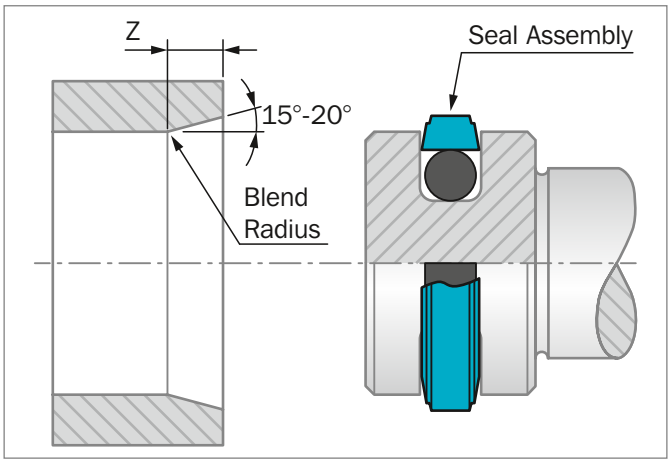

Figure 95: Lead-in chamfer

Table 84: Elastomer Energized Seals

Minimum chamfer for a calibrated seal.

Groove Width L_1*	Lead-in Chamfer Length Z_{min}	
	15°	20°
2.2	2.5	2.0
3.2	3.0	2.5
4.2	3.5	3.0
6.3	5.0	4.0
8.1	6.5	5.0
9.5	7.5	5.5
13.8	10.5	8.0

* The groove width can be found in table "Installation Dimensions" for Turcon® Glyd Ring®, Glyd Ring® T, Glyd Ring® Hz, AQ-Seal® Stepseal® 2K, Stepseal® V and Zurcon® Wynseal M.

Table 85: Compact Seal and Variseal®

Minimum for a calibrated seal (Variseal)

Compact Seal Groove Depth*	Variseal® M2 Series	Lead-in Chamfer Length Z_{min}	
		15°	20°
3.5		2.5	1.5
4.0		2.5	1.5
5.0		3.0	2.0
7.5	PVA0	4.5	3.0
10.0	PVA1 / PVA2	5.0	4.0
12.5		6.5	6.0
15.0	PVA3	7.5	6.5
20.0		10.0	8.5
	PVA4	12.0	9.0
	PVA5	17.0	13.0

* The groove depth is calculated as $(D_N - D_1)/2$. The dimensions for D_N and d_1 can be found in the tables "Installation Dimensions", from chapter Compact Seal Duopac DPS/DPC.

Table 86: Double Delta®

Minimum chamfer for a calibrated seal.

O-Ring Cross Section** d_2		Lead-in Chamfer* Length Z_{min}	
		15°	20°
1.78	-	2.5	2.0
2.40	2.62	3.0	2.5
3.00	3.53	3.5	3.0
5.33	5.70	5.0	4.0
7.00	-	6.5	5.0
8.40	-	7.5	5.5

* Though not less than 2.5% of bore diameter.

** The O-Ring cross-section d_2 can be found in the appropriate table "Installation Dimensions", from chapter Double Delta®.

For Turcon® seals which have been expanded over a piston the seal must be calibrated with a seperate calibration sleeve, or the cylinder tube, where the inlet chamfer is minimum 2 x the value from Table 84 Elastomer Energized Seals.

SURFACE ROUGHNESS ISO 4287

The functional reliability and service life of a sealing system is dependent upon the quality and surface finish of the mating surface to be sealed.

Scores, scratches, pores, concentric or spiral machining marks are not permitted. Higher demands must be made on the surface finish of dynamic mating surfaces than of static mating surfaces.

The characteristics most frequently used to describe the surface micro-finish R_a, R_z and R_{max} are defined in ISO 4287-1. These characteristics alone, however, are not sufficient for assessing the suitability in seal technology. In addition the material contact area of the surface roughness profile M_r in accordance with ISO 4287-1 should be demanded. The significance of this surface specification is illustrated in Figure 96. It shows clearly that specification of R_a and R_z does not describe the surface roughness profile accurately enough. The material contact area M_r is essential to assess surface suitability, as the specific profile form determines this parameter. This in turn is directly dependent on the machining process employed.

Trelleborg Sealing Solutions recommends that the following surface finishes be observed:

Table 87: Surface Roughness

Surface Roughness µm			
Parameter	Mating Surface		Groove Surface
	Turcon® Materials	Zurcon® and Rubber	
R_{max}	0.63 - 2.50	1.00 - 4.00	< 16.0
R_z	0.40 - 1.60	0.63 - 2.50	< 10.0
R_a	0.05 - 0.20	0.10 - 0.40	< 1.6

The material contact area M_r should be approximately 50 to 70%, determined at a cut depth c = 0.25 x R_z, relative to a reference line of $C_{ref.}$ 5%.

Surface profile	R_a	R_z	M_r
closed profile form	0.1	1.0	70%
open profile form 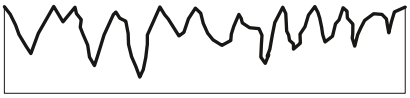	0.2	1.0	15%

Figure 96: Profile forms of surfaces

Figure 96 shows two surface profiles, both of which exhibit nearly the same value for R_z in the test procedure. The difference becomes obvious when the material contact areas of the surface profiles are compared. These show that the upper roughness profile with M_r = 70% has the better seal to mating surface ratio.

Installation of Piston Seals

GENERAL INSTALLATION INSTRUCTIONS

The following points should be observed before installation of the seals:

- Ensure the cylinder tube has a lead-in chamfer; if not, use a calibration sleeve, see Figure 102.
- Deburr and chamfer, or round sharp edges, cover the tips of screw threads
- Remove machining residues such as chips, dirt and other foreign particles, and carefully clean all parts
- The seals can be installed more easily if they are greased or oiled. Attention must be paid to the compatibility of the seal materials with these lubricants. Use only grease without solid additives (e.g. molybdenum disulphide or zinc sulphide).
- Do not use tools with sharp edges.

INSTALLATION IN SPLIT GROOVES

Installation in split grooves is straight forward. The sequence of installation corresponds to the configuration of the seal. Individual seal elements must not be allowed to twist. During final installation of the piston into the cylinder, elastomer or spring-preloaded seals must be calibrated. The corresponding cylinder barrel can be used for this purpose, provided it has a long lead-in chamfer. Alternatively, a calibration sleeve should be used.

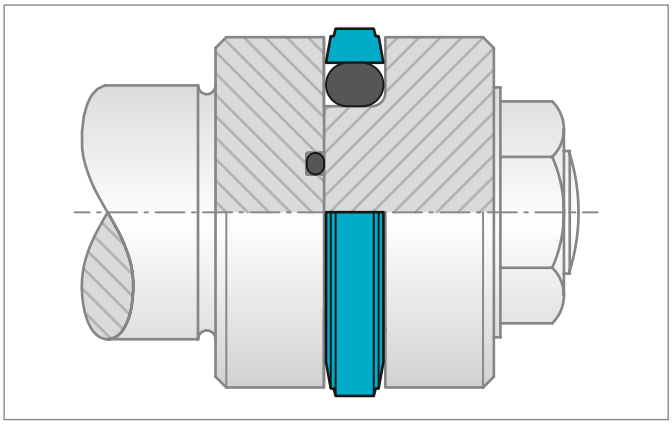

Figure 97: Installation in a split groove

INSTALLATION IN CLOSED GROOVES

- Without installation tools

  Observing the instructions in the chapter "General installation instructions", closed groove installation of elastomer seals as Compact Seal and Zurcon® Wynseal is performed by expanding the seal ring over the piston. For Turcon® and Zurcon® elastomer energized seals, the use of installation tool is recommended. If installation has to be performed without installation tools, the following points should be observed:

- Place the O-Ring in the groove and expand the seal ring over the piston, see Figure 98. Turcon® seals can be installed more easily by heating in oil, water or using a hot air fan to approximately 80 °C to 100 °C (expanding and then shrinking back to the original form).
- Use no sharp edged tools to expand the seal rings. Sizing of the seal ring is achieved with a separate calibration sleeve, or with the cylinder tube provided this has lead-in chamfers equivalent to 2 x the values from Table 84.

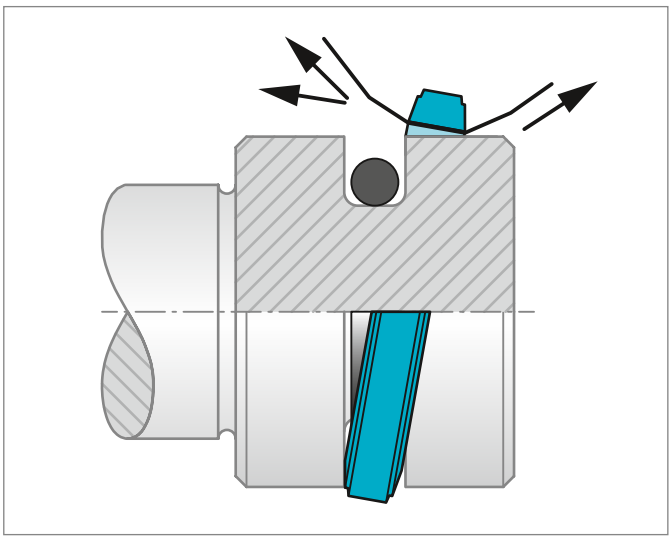

Figure 98: Fitting the seal ring onto the O-Ring in the groove

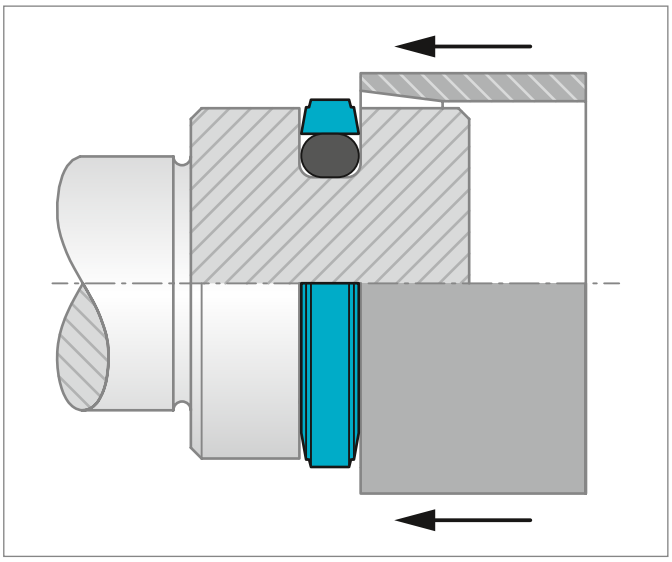

Figure 99: Calibration of the installed seal

INSTALLATION IN CLOSED GROOVES

- With installation aids

  Use of a three-piece installation tool is recommended for the series production installation of Turcon® and Zurcon® seal elements. The tool consists of:
  - Installation cone
  - Expanding pusher
  - Calibration sleeve

All these parts should be made of a polymer material (e.g. Acethal, POM) with good sliding characteristics and low abrasiveness to avoid damage to the seals.

In view of the wide range of sizes and the application-specific installation conditions, these installation tools cannot be supplied as standard by Trelleborg Sealing Solutions.

On request, however, we will gladly provide specimen drawings to allow you to manufacture these tools.

The sequence of installation is illustrated in Figure 100 to Figure 102. Note, however, that the installation of Turcon® seal elements should be performed quickly in order to ensure optimum recovery of the seal ring.

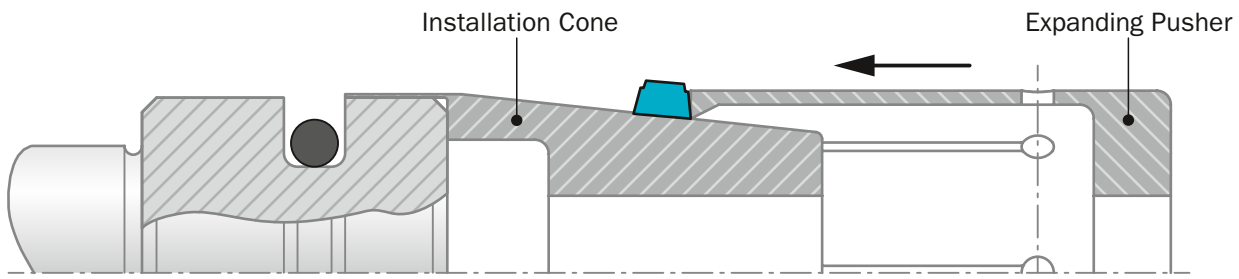

Figure 100: Expanding the Turcon® or Zurcon® sealing element using an expanding sleeve over the installation cone

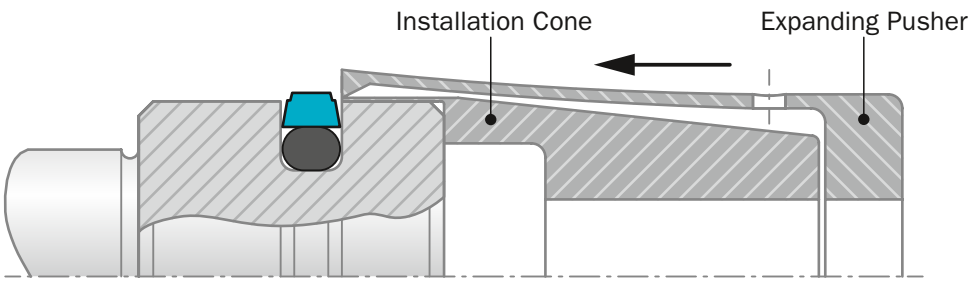

Figure 101: Sealing element after snapping into the groove

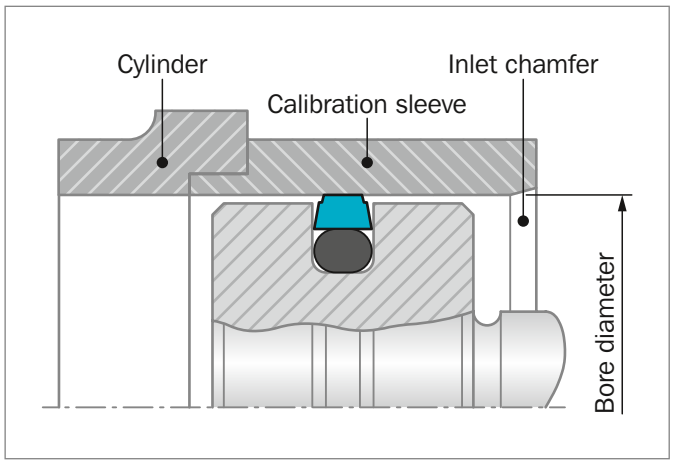

Figure 102: Sizing the sealing element with calibration sleeve

Table 88: Closed groove installation for Turcon® piston seals

Glyd Ring® and seals for similar groove sizes can be installed in closed grooves above the following piston diameters:

O-Ring Series	Material M12, T05, T29, T40, T46	Material M04, T08, T10, Z52	Material Z51, Z80
	D_N mm	D_N mm	D_N mm
000	≥ 8	≥ 15	≥ 20
100	≥ 15	≥ 20	≥ 35
200	≥ 25	≥ 35	≥ 60
300	≥ 40	≥ 50	≥ 75
400	≥ 60	≥ 80	≥ 110
400 H	≥ 133	≥ 133	≥ 150
8.4*	≥ 250	≥ 250	≥ 250
12.0**	≥ 400	≥ 400	≥ 400

* O-Ring cross section according to SMS 1586.

**The energizer can have a special shape.

INSTALLATION OF TURCON® DOUBLE DELTA®

Installation in closed grooves is possible from 8 mm bore diameter. For diameters smaller than 50 mm a installation cone - see Figure 103 - is recommended. After installation the seal must be calibrated, this may be done with the lead-in chamfer of the cylinder tube or by means of a separate calibration sleeve.

Turcon® piston seals can be installed more easily by heating to approximately 80 °C to 100 °C (expanding and then shrinking back to the original form).

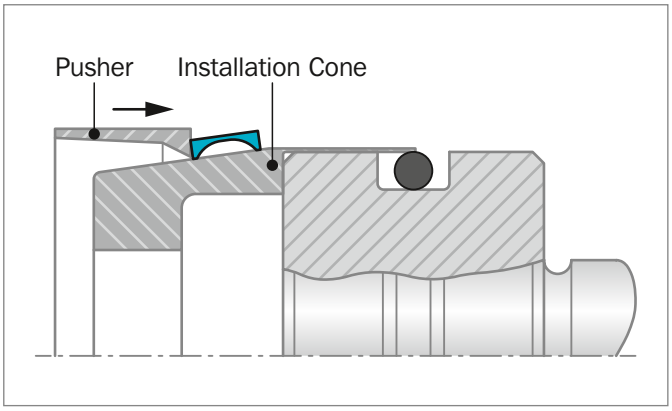

Figure 103: Installation of Turcon® Double Delta® in closed groove with extended Installation cone

INSTALLATION FOR TURCON® VL SEAL®

Installation in closed grooves is possible for diameters according to Table 89.

The O-Ring is inserted in the groove and located at the side of the groove, where after the seal is pushed over the installation cone and into the groove, note the difference in design of the expanding pusher and the installation cone depending on direction of installation - see Figure 104. After insertion in the groove the seal is preferably calibrated before the piston is inserted in the cylinder.

- Turcon® piston seals can be installed more easily by heating to approximately 80 °C to 100 °C (expanding and then shrinking back to the original form).

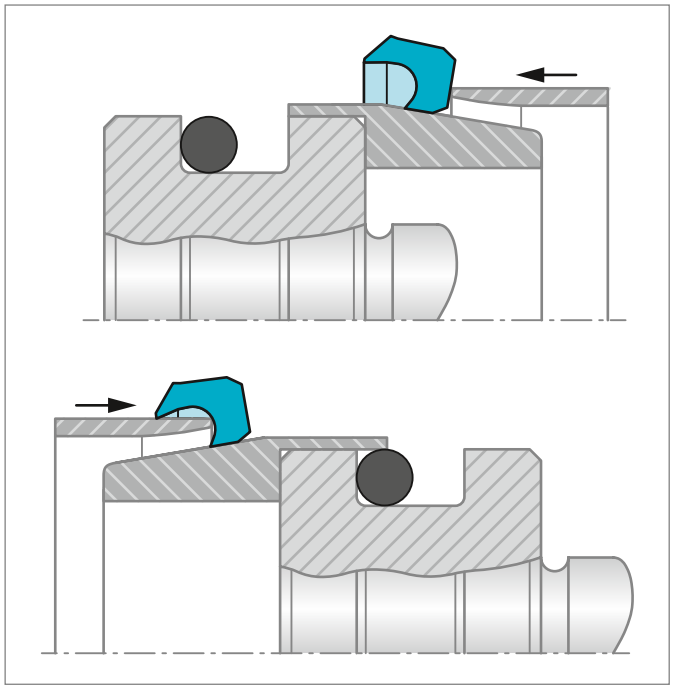

Figure 104: Installation of Piston VL Seal® in closed groove

Table 89: Closed groove installation for VL Seal®

Series No.	Material M12, T05, T29, T40, T46	Material M04, T08, T10, Z52	Material Z51, Z80,
	D_N mm	D_N mm	D_N mm
PEL1	≥ 20 mm	≥ 30 mm	≥ 50 mm
PEL2	≥ 40 mm	≥ 50 mm	≥ 75 mm
PEL3	≥ 60 mm	≥ 100 mm	≥ 110 mm
PEL4	≥ 125 mm	≥ 135 mm	≥ 150 mm
PEL5	≥ 200 mm	≥ 200 mm	≥ 200 mm
PEL6	≥ 400 mm	≥ 400 mm	≥ 400 mm

INSTALLATION OF SPRING ENERGIZED SEALS

Turcon® Variseal® seals should preferably be installed in split grooves. Installation in half-open grooves is possible with a snap fitting. Figure 105 shows the design of the groove.

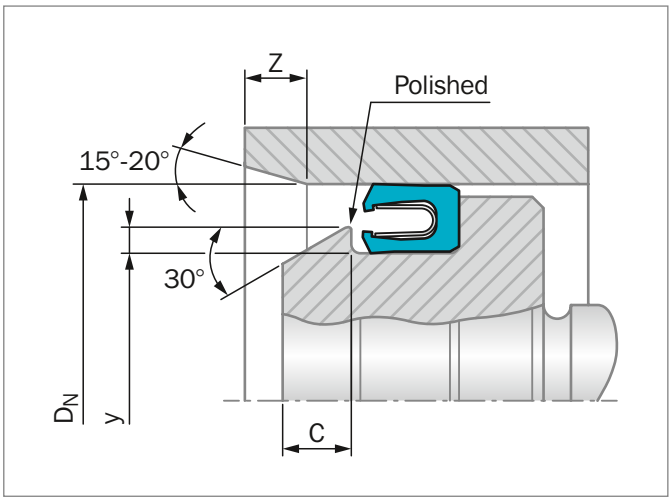

Figure 105: Installation in a half-open groove

Table 90: Installation in Half-Open Grooves

Series No.	D_N min.	Y min.	Z min.	C min.
PVA0	11.0	0.4	1.20	0.70
PVA1	17.5	0.6	1.50	1.10
PVA2	20.0	0.7	2.50	1.25
PVA3	28.0	0.8	4.50	1.40
PVA4	45.0	0.9	6.00	1.60
PVA5	100.0	1.5	11.00	2.60

For further details, see chapter Turcon® Variseal® .

In exceptional cases or with existing designs, an installation in closed grooves is also possible. The details in Table 90 should be regarded as guide values for installation.

Table 91: Installation in closed grooves

Series No.	D_N mm
PVA0	35
PVA1	50
PVA2	70
PVA3	105
PVA4	140
PVA5	250

INSTALLATION OF THE COMPACT SEAL

The Compact Seal can be installed in one-piece or split pistons. On one-piece pistons, the inner rubber- elastic sealing element is first installed in the middle of the groove diameter by expanding over the piston. Then the cut Back-up Ring are fitted on both sides of the sealing element and then the two cut guide rings are installed.

On split pistons the individual parts are installed in the following order: Guide ring, Back-up Ring, sealing element, Back-up Ring, Guide ring.

Before installation all seal parts, including piston and cylinder, should be oiled or greased.

INSTALLATION OF AQ-SEAL® AND AQ-SEAL® 5 WITH QUAD-RING® OR BEAN SEAL

The same installation procedure for piston Glyd Ring® may be used for AQ-Seal® and AQ-Seal® 5 see pages 264 to 266 except for AQ-Seal® 5, which uses different groove sizes. However, the Quad-Ring® or Bean Seal should not be fitted until AQ-Seal® or AQ-Seal® 5 have been calibrated - see Figure 102.

INSTALLATION HINT:

AQ-Seal® and AQ-Seal® 5 with Quad-Ring® or Bean Seal are normally supplied with the Quad-Ring® or Bean Seal uninstalled:

To assist mounting of the elastomer element after AQ-Seal® or AQ-Seal® 5 have been calibrated; dental floss could be helpful to avoid twisting of the Quad-Ring® or Bean Seal - see Figure 106.

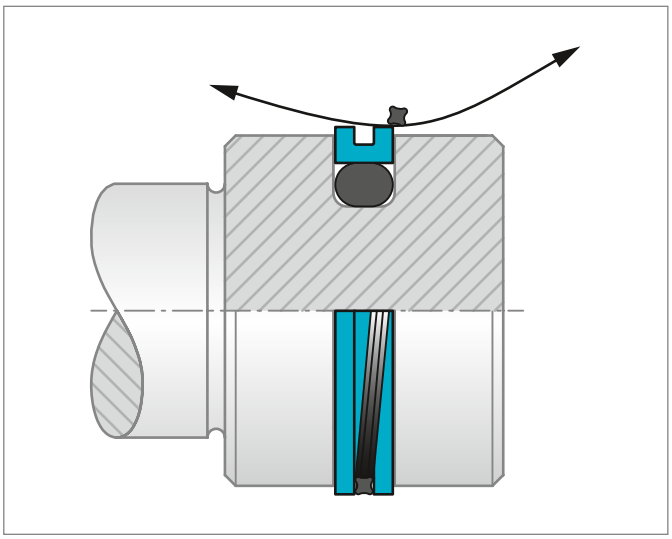

Figure 106: Installation of Quad-Ring® in AQ-Seal® for piston.

Turcon® Glyd Ring®

Double-acting

Rubber-energized plastic-faced seal

Material:
Turcon®, Zurcon® and Elastomer

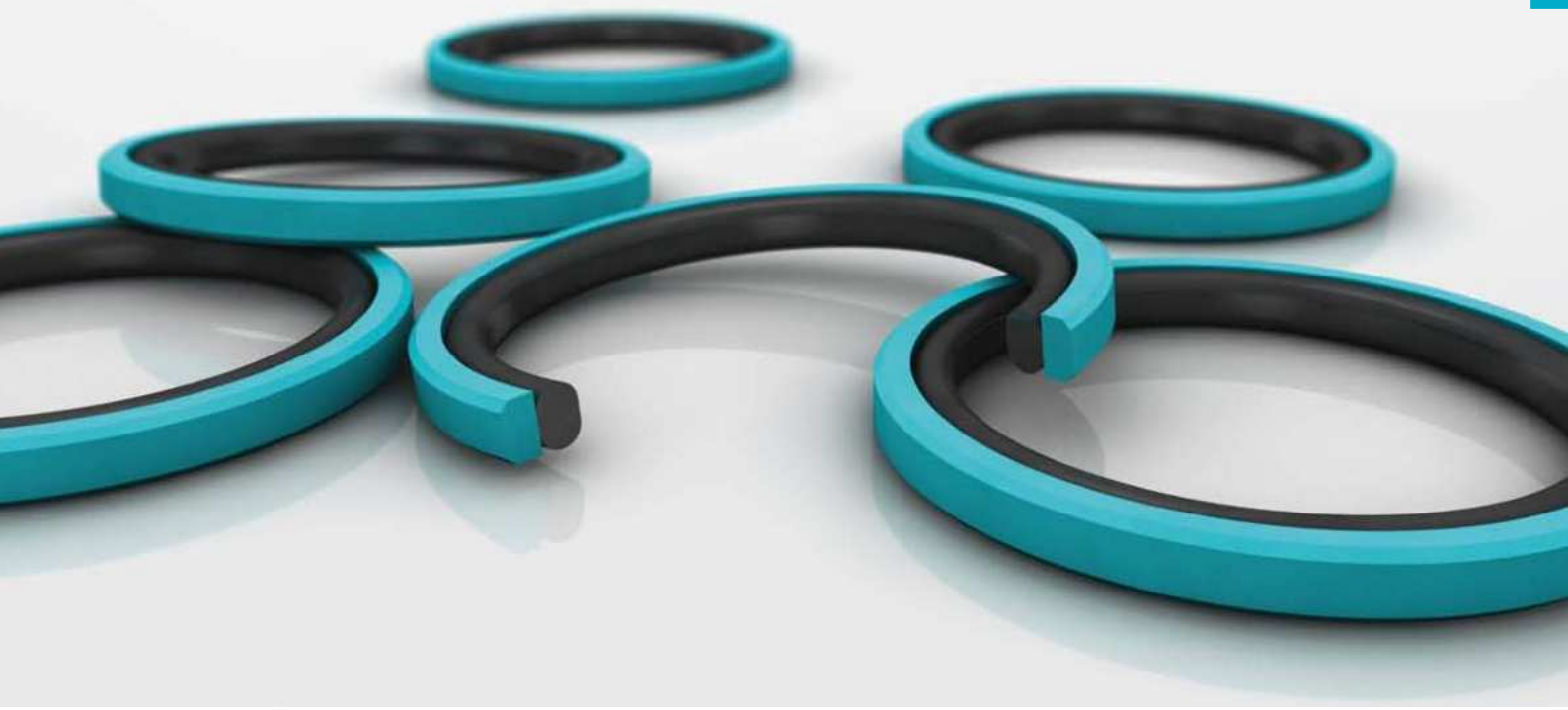

Turcon® Glyd Ring®

Description

Turcon® Glyd Ring® is a very effective and reliable low friction seal. It is particularly suitable as a piston seal in both high and low pressure systems.

The double-acting Glyd Ring® is a combination of a Turcon® based slipper seal and an energizing O-Ring. It has an interference fit which together with the squeeze of the O-Ring ensures a good sealing effect even at low pressure. At higher system pressures, the O-Ring is energised by the fluid, pushing Glyd Ring® against the sealing face with increased force.

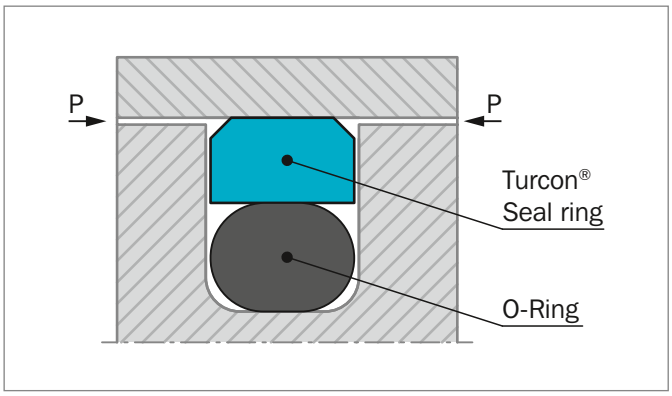

Figure 107: Turcon® Glyd Ring®

The geometry of Glyd Ring® ensures good static sealing and allows the lubricating hydrodynamic fluid film to be built under the seal in linear applications.

ADVANTAGES

- No stick-slip effect when starting for smooth operation
- Minimum static and dynamic friction for a minimum energy loss and operating temperature
- Suitable for non lubricating fluids depending on seal material for optimum design flexibility
- High wear resistance ensures long service life
- Installation grooves acc. to ISO 7425-1 as well as Stepseal® standard groove dimensions
- No adhesive effect to the mating surface during long period of inactivity or storage
- Suitable for most hydraulic fluids in relation with most modern hardware materials and surface finish depending on material selected.
- Suitable for environmentally friendly hydraulic fluids
- Available for all cylinder diameters up to 2700 mm.

APPLICATION EXAMPLES

Over several decades Glyd Ring® has been successfully implemented in a large variety of applications as double acting Piston seals in hydraulic components such as:

- Injection molding machines
- Machine tools
- Presses
- Excavators
- Forklifts & handling machinery
- Agriculture equipment
- Valves for hydraulic & pneumatic circuits
- Servo equipment
- Pressure intensifiers
- Jacks

OPERATING CONDITIONS

Glyd Ring® is recommended for linear (with a length of stroke at least twice the groove width) and helical movements.

Pressure:	Up to 60 MPa
Speed:	Up to 15 m/s
Frequency:	Up to 5 Hz.
Temperature:	-45 °C to +200 °C * depending on O-Ring material
Media:	Mineral oil-based hydraulic fluids, flame retardant hydraulic fluids, environmentally friendly hydraulic fluids (bio-oils), phosphate ester, water and others, depending on the seal and O-Ring material compatibility see Table 92
Clearance:	The maximum permissible radial clearance S_{max} is shown in the Table 93 as a function of the operating pressure and functional diameter.

IMPORTANT NOTE

The above data are maximum values and cannot be used at the same time, e.g. the maximum operating speed depends on material type, pressure, temperature and gap value. Temperature range also depends on media.

* In the case of unpressurized applications in temperatures below 0 °C please contact your local Trelleborg Sealing Solutions marketing company for more information!

NOTCHES

To assure that a rapid energising of the seal takes place at sudden changes of pressure and direction of motion, radial notches are made on both sides of the seal.

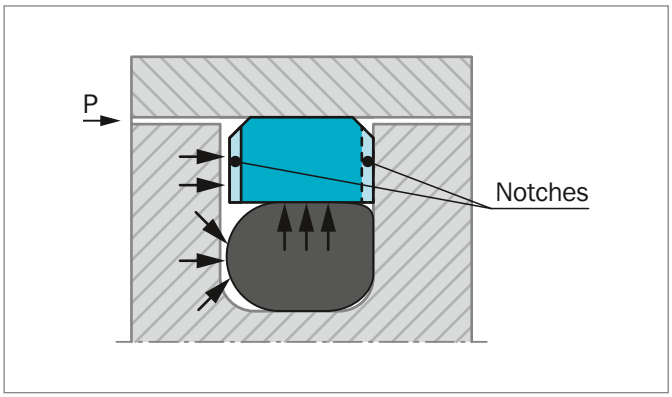

Figure 108: Turcon® Glyd Ring® with notches

Notches are standard on the following series and diameters
PG 42 for bore dia. > 30 mm
PG 44 for bore dia. > 20 mm
PG 46 for bore dia. > 40 mm

INSTALLATION INSTRUCTIONS

Glyd Ring® is installed according to information on page 264 to 266.

Closed groove installation according to dimensions in Table 88 page 266.

RECOMMENDED MATERIALS

The following material combinations have proven effective for hydraulic applications:

Turcon® Glyd Ring® in Turcon® M12
All round material for light to heavy hydraulic applications with linear or helical movements in mineral oils, flame retardant hydraulic fluids, phosphate ester, bio-oils or fluids having low lubricating properties:

O-Ring:	NBR 70 Shore A	N
	FKM 70 Shore A	V
Set code:	M12N or M12V	

Turcon® Glyd Ring® in Turcon® T46
For medium to heavy applications with linear movements in mineral oils and other medium with good lubrication:

O-Ring:	NBR 70 Shore A	N
	FKM 70 Shore A	V
Set code:	T46N or T46V	

For specific applications, all Turcon® materials are available. Other material combinations are listed in Table 92.

Table 92: Turcon® and Zurcon® Materials for Glyd Ring®

Material, Applications, Properties	Code	O-Ring Material Shore A	Code	O-Ring Operating Temp.* °C	Mating Surface Material	MPa max. Dynamic
Turcon® M12 First material choice for seals in linear motion Overall improved properties For new constructions and updating For all commonly applied hydraulic fluids including fluids with low lubrication performance Lowest friction and best sliding properties Lowest wear on seals Improved absorption of abrasive contaminants Low wear or abrasion of counter surface BAM tested Mineral fiber and Additives filled Color: Dark gray	M12	NBR 70	N	-30 to +100	Steel Steel hardened Cast iron Stainless steel Titanium	50
		NBR 70 Low temp.	T	-45 to +80		
		FKM 70	V	-10 to +200		
Turcon® T05 For lubricating fluids Also for gas service Very low friction Very good sliding and sealing properties Color: Turquoise	T05	NBR 70	N	-30 to +100	Steel Steel hardened	20
		NBR 70 Low temp.	T	-45 to +80		
		FKM 70	V	-10 to +200		
Turcon® T08 For lubricating fluids and linear motion Very high compressive strength and extrusion resistance Hard counter surfaces is recommended Bronze filled Color: Light to dark brown, which may have variations in shading	T08	NBR 70	N	-30 to +100	Steel hardened Cast iron	60
		NBR 70 Low temp.	T	-45 to +80		
		FKM 70	V	-10 to +200		
Turcon® T10 For hydraulic and pneumatic For lubricating and non-lubricating fluids High extrusion resistance Good chemical resistance Not for electrically conducting fluids BAM tested Carbon, graphite filled Color: Black	T10	NBR 70	N	-30 to +100	Steel Steel hardened Stainless steel	40
		NBR 70 Low temp.	T	-45 to +80		
		FKM 70	V	-10 to +200		
		EPDM 70	E**	-45 to +145		
Turcon® T29 For lubricating and non-lubricating fluids Good extrusion resistance Surface texture is not suitable for gas sealing Not for electrically conducting fluids Carbon fiber filled Color: Gray	T29	NBR 70	N	-30 to +100	Steel Steel hardened Cast iron Stainless steel	30
		NBR 70 Low temp.	T	-45 to +80		
		FKM 70	V	-10 to +200		
		EPDM 70	E**	-45 to +145		

Table continues on next page

Material, Applications, Properties	Code	O-Ring Material Shore A	Code	O-Ring Operating Temp.* °C	Mating Surface Material	MPa max. Dyna-mic
Turcon® T40 For lubricating and non-lubricating fluids High frequency and short strokes **Water hydraulics** Surface texture is not suitable for gas sealing Carbon fiber filled Color: Gray	T40	NBR 70	N	-30 to +100	Steel Steel hardened Cast iron Stainless steel Aluminum	25
		NBR 70 Low temp.	T	-45 to +80		
		FKM 70	V	-10 to +200		
		EPDM 70	E**	-45 to +145		
Turcon® T46 For lubricated hydraulics in linear motion High compressive strength High extrusion resistance Very good sliding and wear properties BAM tested Bronze filled Color: Light to dark brown, which may have variations in shading	T46	NBR 70	N	-30 to +100	Steel hardened Cast iron	50
		NBR 70 Low temp.	T	-45 to +80		
		FKM 70	V	-10 to +200		
Zurcon® Z51*** For mineral oil based fluids **Very high abrasion and extrusion resistance** For counter surface with rougher surface finish Limited chemical resistance Max. working temperature 110 °C Cast polyurethane Color: Yellow to light-brown	Z51	NBR 70	N	-30 to +100	Steel Steel hardened Cast iron Stainless steel Ceramic coating	60
		NBR 70 Low temp.	T	-45 to +80		
Zurcon® Z80 For lubricating and non-lubricating fluids Water based fluids, air and gases Dry air pneumatics High abrasion and extrusion resistance For service in abrasive conditions and medium with particles Good chemical resistance Limited temperature capability (-60 to +80 °C) UHMWPE (Ultra High Molecular Weight Polyethylene) Color: White to off-white	Z80	NBR 70	N	-30 to +100	Steel Steel hardened Stainless steel Aluminum Ceramic coating	35
		NBR 70 Low temp.	T	-45 to +80		
		EPDM 70	E**	-45 to +145		

* The O-Ring Operation Temperature is only valid in mineral hydraulic oil (except EPDM).

** Material not suitable for mineral oils.

*** Max. diameter 2300 mm.

BAM: Tested by "Bundesanstalt Materialprufung, Germany".

Highlighted materials are recommended.

Installation Recommendation

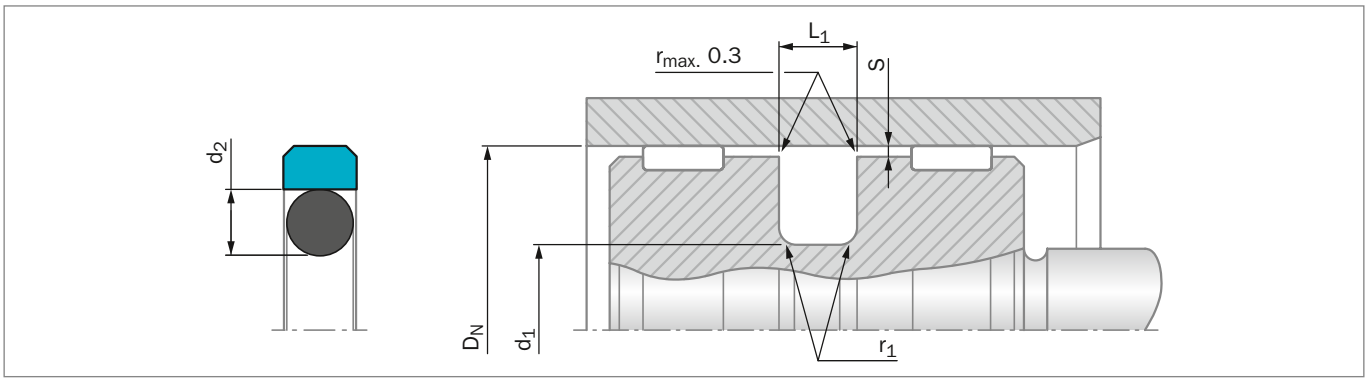

Figure 109: Installation Drawing

Table 93: Installation Dimensions – Standard Recommendations

Bore Diameter D_N H9			Groove Diameter	Groove Width	Radius	Radial Clearance S_{max}*			O-Ring Cross Section
Series No. PG 44 Standard Application	**Series No. PG 46 Light Application**	**Series No. PG 42 Heavy Duty Application**	**d_1** h9	**L_1** ±0.2	**$r_{1\ max}$**	**10 MPa**	**20 MPa**	**40 MPa**	**d_2**
8 - 14.9	15 - 39.9	-	D_N - 4.9	2.2	0.4	0.30	0.20	0.15	1.78
15 - 39.9	40 - 79.9	8 - 14.9	D_N - 7.5	3.2	0.6	0.40	0.25	0.15	2.62
40 - 79.9	80 - 132.9	15 - 39.9	D_N - 11.0	4.2	1.0	0.40	0.25	0.20	3.53
80 - 132.9	133 - 329.9	40 - 79.9	D_N - 15.5	6.3	1.3	0.50	0.30	0.20	5.33
133 - 329.9	330 - 669.9	80 - 132.9	D_N - 21.0	8.1	1.8	0.60	0.35	0.25	7.00
330 - 669.9	670 - 999.9	133 - 329.9	D_N - 24.5	8.1	1.8	0.60	0.35	0.25	7.00
670 - 999.9	1000 - 1200	330 - 669.9	D_N - 28.0	9.5	2.5	0.70	0.50	0.30	8.40
1000 - 2700**	-	670 - 999.9	D_N - 38.0	13.8	3.0	1.00	0.70	0.60	12.00

* At pressures > **40 MPa** use diameter tolerance H8/f8 (bore/piston) in the area of the seal or consult your local Trelleborg Sealing Solutions marketing company for alternative material or profiles.
Slydring® / Wear Rings are not applicable at very small radial clearances please consult the Slydring® catalog.
** O-Rings with 12 mm cross section are delivered as special profile ring.

ORDERING EXAMPLE

Turcon® Glyd Ring® complete with O-Ring, standard application:

Series:	PG44 from Table 93
Bore Diameter:	D_N = 80.0 mm
TSS Part No.:	PG4400800 from Table 94

Select the material from Table 92. The corresponding code numbers are appended to the TSS Part No. Together these form the TSS Article Number. The TSS Article Number for all intermediate sizes can be determined by following the example:

TSS Article No. PG44 0 0800 - M12 N

- TSS Series No. — PG44
- Type (Standard) — 0
- Bore Diameter x 10*** — 0800
- Quality Index (Standard) — -
- Material Code (Seal Ring) — M12
- Material Code (O-Ring) — N

*** For diameters $D_N \geq$ 1000.0 mm multiply only by factor 1.
Example: PG44 for diameter D_N = 1200.0 mm
TSS Article No.: PG44**X1200** - M12N

Table 94: Installation Dimensions / TSS Part No.

Bore Dia. D_N H9	Groove Dia. d_1 h9	Groove Width L_1 +0.2	TSS Part No.	O-Ring Size
8.0	3.1	2.2	PG4400080	2.57 x 1.78
10.0	5.1	2.2	PG4400100	4.80 x 1.80
12.0	7.1	2.2	PG4400120	6.70 x 1.80
14.0	9.1	2.2	PG4400140	8.75 x 1.80
15.0	7.5	3.2	PG4400150	7.00 x 2.62
16.0	**11.1**	**2.2**	**PG4600160**	**10.60 x 1.80**
16.0	**8.5**	**3.2**	**PG4400160**	**7.59 x 2.62**
18.0	13.1	2.2	PG4600180	12.42 x 1.78
18.0	10.5	3.2	PG4400180	9.19 x 2.62
19.05	11.5	3.2	PG4400190	10.77 x 2.62
20.0	**15.1**	**2.2**	**PG4600200**	**14.00 x 1.78**
20.0	**12.5**	**3.2**	**PG4400200**	**12.37 x 2.62**
21.0	13.5	3.2	PG4400210	12.37 x 2.62
22.0	17.1	2.2	PG4600220	17.17 x 1.78
22.0	14.5	3.2	PG4400220	13.94 x 2.62
24.0	16.5	3.2	PG4400240	15.54 x 2.62
25.0	**20.1**	**2.2**	**PG4600250**	**19.00 x 1.80**
25.0	**17.5**	**3.2**	**PG4400250**	**17.12 x 2.62**
25.0	**14.0**	**4.2**	**PG4200250**	**13.87 x 3.53**
25.4	20.5	2.2	PG4600254	20.35 x 1.78
28.0	20.5	3.2	PG4400280	20.29 x 2.62
30.0	25.1	2.2	PG4600300	25.12 x 1.78
30.0	22.5	3.2	PG4400300	21.89 x 2.62
32.0	**27.1**	**2.2**	**PG4600320**	**26.70 x 1.78**
32.0	**24.5**	**3.2**	**PG4400320**	**23.47 x 2.62**
32.0	**21.0**	**4.2**	**PG4200320**	**20.22 x 3.53**
34.0	29.1	2.2	PG4600340	28.30 x 1.78
35.0	27.5	3.2	PG4400350	26.64 x 2.62
35.0	24.0	4.2	PG4200350	23.40 x 3.53
36.0	28.5	3.2	PG4400360	28.24 x 2.62
38.0	33.1	2.2	PG4600380	33.05 x 1.78
38.0	30.5	3.2	PG4400380	29.82 x 2.62
40.0	**32.5**	**3.2**	**PG4600400**	**31.42 x 2.62**
40.0	**29.0**	**4.2**	**PG4400400**	**28.17 x 3.53**
42.0	31.0	4.2	PG4400420	29.75 x 3.53
44.45	36.9	3.2	PG4600444	36.17 x 2.62
45.0	34.0	4.2	PG4400450	32.92 x 3.53
48.0	37.0	4.2	PG4400480	36.09 x 3.53
50.0	**42.5**	**3.2**	**PG4600500**	**40.94 x 2.62**
50.0	**39.0**	**4.2**	**PG4400500**	**37.69 x 3.53**
50.0	**34.5**	**6.3**	**PG4200500**	**32.69 x 5.33**
50.8	43.3	3.2	PG4600508	42.52 x 2.62
50.8	39.8	4.2	PG4400508	37.69 x 3.53
52.0	41.0	4.2	PG4400520	40.87 x 3.53
53.0	42.0	4.2	PG4400530	40.87 x 3.53
55.0	44.0	4.2	PG4400550	44.04 x 3.53
57.0	46.0	4.2	PG4400570	44.04 x 3.53
58.0	47.0	4.2	PG4400580	47.22 x 3.53
60.0	49.0	4.2	PG4400600	47.22 x 3.53
62.0	51.0	4.2	PG4400620	50.39 x 3.53
63.0	**52.0**	**4.2**	**PG4400630**	**50.39 x 3.53**
63.0	**47.5**	**6.3**	**PG4200630**	**46.99 x 5.33**
65.0	54.0	4.2	PG4400650	53.57 x 3.53
68.0	57.0	4.2	PG4400680	56.74 x 3.53
70.0	62.5	3.2	PG4600700	61.60 x 2.62
70.0	59.0	4.2	PG4400700	56.74 x 3.53
70.0	54.5	6.3	PG4200700	53.34 x 5.33
75.0	64.0	4.2	PG4400750	63.09 x 3.53
75.0	59.5	6.3	PG4200750	56.52 x 5.33
80.0	**69.0**	**4.2**	**PG4600800**	**66.27 x 3.53**
80.0	**64.5**	**6.3**	**PG4400800**	**62.87 x 5.33**
80.0	**59.0**	**8.1**	**PG4200800**	**58.00 x 7.00**
82.5	67.0	6.3	PG4400825	66.04 x 5.33
85.0	69.5	6.3	PG4400850	69.22 x 5.33
85.0	64.0	8.1	PG4200850	63.00 x 7.00
90.0	79.0	4.2	PG4600900	78.97 x 3.53
90.0	74.5	6.3	PG4400900	72.39 x 5.33
90.0	69.0	8.1	PG4200900	68.00 x 7.00
95.0	84.0	4.2	PG4600950	82.14 x 3.53
95.0	79.5	6.3	PG4400950	78.74 x 5.33
95.0	74.0	8.1	PG4200950	73.00 x 7.00
100.0	**89.0**	**4.2**	**PG4601000**	**88.49 x 3.53**
100.0	**84.5**	**6.3**	**PG4401000**	**81.92 x 5.33**
100.0	**79.0**	**8.1**	**PG4201000**	**78.00 x 7.00**
101.6	86.1	6.3	PG4401016	85.09 x 5.33
105.0	94.0	4.2	PG4601050	91.67 x 3.53
105.0	89.5	6.3	PG4401050	88.27 x 5.33
108.0	92.5	6.3	PG4401080	91.44 x 5.33
110.0	99.0	4.2	PG4601100	98.02 x 3.53
110.0	94.5	6.3	PG4401100	91.44 x 5.33

Bore Dia. D_N H9	Groove Dia. d_1 h9	Groove Width L_1 +0.2	TSS Part No.	O-Ring Size
110.0	89.0	8.1	PG4201100	88.00 x 7.00
115.0	99.5	6.3	PG4401150	97.79 x 5.33
120.0	109.0	4.2	PG4601200	107.54 x 3.53
120.0	104.5	6.3	PG4401200	100.97 x 5.33
120.0	99.0	8.1	PG4201200	98.00 x 7.00
125.0	**114.0**	**4.2**	**PG4601250**	**113.89 x 3.53**
125.0	**109.5**	**6.3**	**PG4401250**	**107.32 x 5.33**
125.0	**104.0**	**8.1**	**PG4201250**	**103.00 x 7.00**
127.0	111.5	6.3	PG4401270	110.49 x 5.33
130.0	114.5	6.3	PG4401300	113.67 x 5.33
130.0	105.5	8.1	PG4201300	104.00 x 7.00
132.0	121.0	4.2	PG4601320	120.24 x 3.53
135.0	114.0	8.1	PG4401350	113.67 x 7.00
140.0	124.5	6.3	PG4601400	123.19 x 5.33
140.0	119.0	8.1	PG4401400	116.84 x 7.00
145.0	129.5	6.3	PG4601450	126.37 x 5.33
145.0	124.0	8.1	PG4401450	123.19 x 7.00
150.0	134.5	6.3	PG4601500	132.72 x 5.33
150.0	129.0	8.1	PG4401500	126.37 x 7.00
155.0	134.0	8.1	PG4401550	132.72 x 7.00
160.0	**144.5**	**6.3**	**PG4601600**	**142.24 x 5.33**
160.0	**139.0**	**8.1**	**PG4401600**	**135.89 x 7.00**
165.0	144.0	8.1	PG4401650	142.24 x 7.00
170.0	149.0	8.1	PG4401700	145.42 x 7.00
175.0	154.0	8.1	PG4401750	151.77 x 7.00
180.0	164.5	6.3	PG4601800	164.47 x 5.33
180.0	159.0	8.1	PG4401800	158.12 x 7.00
190.0	169.0	8.1	PG4401900	164.47 x 7.00
194.0	178.5	6.3	PG4601940	177.17 x 5.33
200.0	**184.5**	**6.3**	**PG4602000**	**183.52 x 5.33**
200.0	**179.0**	**8.1**	**PG4402000**	**177.17 x 7.00**
205.0	184.0	8.1	PG4402050	183.52 x 7.00
210.0	189.0	8.1	PG4402100	183.52 x 7.00
215.0	194.0	8.1	PG4402150	189.87 x 7.00
220.0	199.0	8.1	PG4402200	196.22 x 7.00
230.0	214.5	6.3	PG4602300	208.92 x 5.33
230.0	209.0	8.1	PG4402300	202.57 x 7.00
240.0	219.0	8.1	PG4402400	215.27 x 7.00
250.0	**234.5**	**6.3**	**PG4602500**	**234.32 x 5.33**
250.0	**229.0**	**8.1**	**PG4402500**	**227.97 x 7.00**

Bore Dia. D_N H9	Groove Dia. d_1 h9	Groove Width L_1 +0.2	TSS Part No.	O-Ring Size
250.0	**225.5**	**8.1**	**PG4202500**	**227.97 x 7.00**
254.0	233.0	8.1	PG4402540	227.97 x 7.00
260.0	239.0	8.1	PG4402600	240.67 x 7.00
265.0	244.0	8.1	PG4402650	240.67 x 7.00
268.0	247.0	8.1	PG4402680	240.67 x 7.00
270.0	249.0	8.1	PG4402700	240.67 x 7.00
280.0	259.0	8.1	PG4402800	253.37 x 7.00
290.0	269.0	8.1	PG4402900	266.07 x 7.00
300.0	279.0	8.1	PG4403000	278.77 x 7.00
300.0	275.5	8.1	PG4203000	266.07 x 7.00
304.8	283.8	8.1	PG4403048	278.77 x 7.00
310.0	289.0	8.1	PG4403100	278.77 x 7.00
320.0	**299.0**	**8.1**	**PG4403200**	**291.47 x 7.00**
320.0	**295.5**	**8.1**	**PG4203200**	**291.47 x 7.00**
330.0	305.5	8.1	PG4403300	304.17 x 7.00
340.0	315.5	8.1	PG4403400	316.87 x 7.00
350.0	325.5	8.1	PG4403500	316.87 x 7.00
360.0	335.5	8.1	PG4403600	329.57 x 7.00
370.0	345.5	8.1	PG4403700	342.27 x 7.00
380.0	355.5	8.1	PG4403800	354.97 x 7.00
400.0	**375.5**	**8.1**	**PG4404000**	**367.67 x 7.00**
420.0	395.5	8.1	PG4404200	393.07 x 7.00
430.0	405.5	8.1	PG4404300	405.26 x 7.00
440.0	415.5	8.1	PG4404400	405.26 x 7.00
450.0	425.5	8.1	PG4404500	417.96 x 7.00
460.0	435.5	8.1	PG4404600	430.66 x 7.00
480.0	455.5	8.1	PG4404800	456.06 x 7.00
500.0	**475.5**	**8.1**	**PG4405000**	**468.76 x 7.00**
555.0	530.5	8.1	PG4405550	532.26 x 7.00
600.0	575.5	8.1	PG4406000	557.66 x 7.00
640.0	615.5	8.1	PG4406400	608.08 x 7.00
660.0	635.5	8.1	PG4406600	633.48 x 7.00
700.0	672.0	9.5	PG4407000	670.00 x 8.40
710.0	682.0	9.5	PG4407100	680.00 x 8.40
740.0	712.0	9.5	PG4407400	710.00 x 8.40
780.0	752.0	9.5	PG4407800	750.00 x 8.40
800.0	772.0	9.5	PG4408000	770.00 x 8.40
900.0	872.0	9.5	PG4409000	870.00 x 8.40
1000.0	972.0	9.5	PG46X1000	970.00 x 8.40
1000.0	962.0	13.8	PG44X1000	960.00 x 12.00

Bore Dia.	Groove Dia.	Groove Width	TSS Part No.	O-Ring Size
D_N H9	d_1 h9	L_1 +0.2		
1050.0	1022.0	9.5	PG46X1050	1020.00 x 8.40
1065.0	1027.0	13.8	PG44X1065	1025.00 x 12.00
1070.0	1032.0	13.8	PG44X1070	1030.00 x 12.00
1200.0	1172.0	9.5	PG46X1200	1170.00 x 8.40
1200.0	1162.0	13.8	PG44X1200	1160.00 x 12.00
1225.0	1187.0	13.8	PG44X1225	1185.00 x 12.00
1500.0	1462.0	13.8	PG44X1500	1460.00 x 12.00
2000.0	1962.0	13.8	PG44X2000	1960.00 x 12.00
2700.0	2662.0	13.8	PG44X2700	2660.00 x 12.00

All dimensions in **bold** type are suitable for installation in grooves to ISO 7425-1, bore dia. in accordance with ISO 3320. Other dimensions and all intermediate sizes up to 2700 mm dia. including inch sizes can be supplied.

All O-Rings with 12 mm cross section are delivered as special profile ring.

Turcon® Glyd Ring® T

Double-acting

Rubber-energized plastic-faced seal

Material:
Turcon®, Zurcon® and Elastomer

Turcon® Glyd Ring® T*

Description

Turcon® Glyd Ring® T is a further technical development of Turcon® Glyd Ring® . It is fully interchangeable with earlier Glyd Ring® seals in all new applications.

The main benefits of the patented seal are provided by the innovative functional principle of the trapezoidal profile cross section.The sides of the seal profile tapers towards the seal surface. The profile can thus retain the robust and compact form typical of piston seals without losing any of the flexibility required to achieve a pressure-related maximum compression see Figure 110.

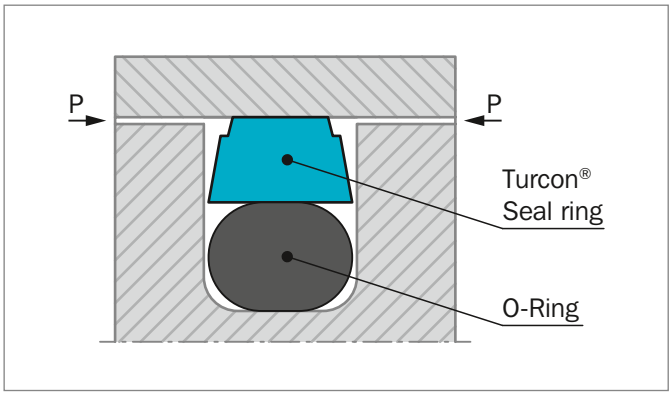

Figure 110: Turcon® Glyd Ring® T

The edge angle of Glyd Ring® T permits an additional degree of freedom and enables a slight tilting movement of the seal. The maximum compression is thus always shifted towards the area of the seal edge directly exposed to the pressure.

On the low-pressure edge of the seal Glyd Ring® T exhibits only zones with neutral strains without compressive or shearing loads, thus effectively reducing the danger of gap extrusion. The resulting benefits are as follows:

ADVANTAGES

- Very good static sealing performance
- Increased clearance possible (approximately +50%), depending on the operating conditions
- Due to the larger extrusion gap, safe use even with soiled media
- Low friction, no stick-slip effect
- Simple groove design, one-piece pistons possible
- Installation grooves to ISO 7425-1 as well as Stepseal® standard groove dimensions
- Adaptable to the operating conditions due to a wide range of materials (Turcon® , Zurcon®)
- Suitable for environmentally friendly hydraulic fluids
- Available for all cylinder diameters up to 2700 mm.

APPLICATION EXAMPLES

Turcon® Glyd Ring® T is the recommended sealing element for double acting pistons of hydraulic components such as:

- Injection molding machines
- Machine tools
- Presses
- Excavators
- Forklifts & handling machinery
- Agriculture
- Valves for hydraulic & pneumatic circuits.
- Servo equipment
- Pressure intensifiers
- Jacks

It is particularly recommended for heavy duty and large diameter applications.

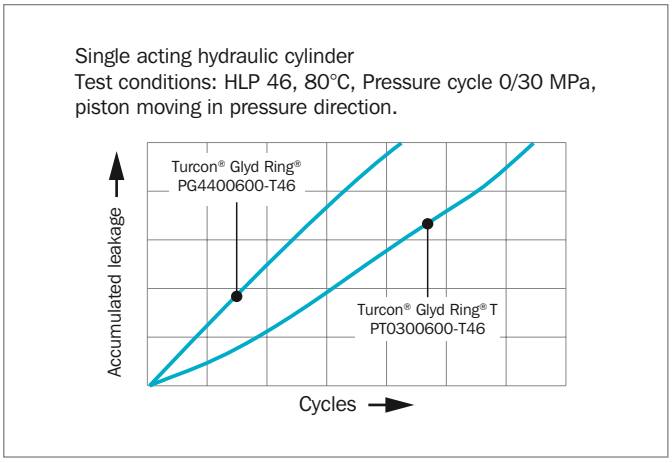

Figure 111: Dynamic leakage Turcon® Glyd Ring® T / Turcon® Glyd Ring® as single-acting piston seal

* Patent No.:
DE 4140833C3
EP 0582593
Japan 2799367
USA 5,433,452

OPERATING CONDITIONS

Pressure:	Up to 60 MPa
Speed:	Up to 15 m/s
Temperature:	-45 °C to +200 °C * depending on O-Ring material
Media:	Mineral oil-based hydraulic fluids, flame retardant hydraulic fluids, environmentally friendly hydraulic fluids (bio-oils), phosphate ester, water, air and others, depending on the seal and O-Ring material compatibility see Table 96.
Clearance:	The maximum permissible radial clearance S_{max} is shown in Table 97, as a function of the operating pressure and functional diameter.

IMPORTANT NOTE

The above data are maximum values and cannot be used at the same time, e.g. the maximum operating speed depends on material type, pressure, temperature and gap value. Temperature range also depends on media.

* In the case of unpressurized applications in temperatures below 0 °C please contact your local Trelleborg Sealing Solutions marketing company for more information!

SERIES

Different cross section sizes are recommended as a function of the seal diameters.

Table 95, shows the relationship between the series number according to the seal diameter range and the different application class sizes:

Standard application:	General applications without exceptional operating conditions.
Light application:	Applications with demands for reduced friction or for smaller grooves.
Heavy-duty application:	For exceptional operating loads such as high pressures, pressure peaks, etc.

Table 95: Available Range

Series No.	Piston Diameter D_N H9
PT00	8.0 - 140.0
PT01	8.0 - 200.0
PT02	16.0 - 380.0
PT03	40.0 - 480.0
PT04	80.0 - 700.0
PT08	133.0 - 999.9
PT05	310.0 - 999.9
PT05X	1000.0 - 1200.0
PT06	670.0 - 999.9
PT06X	1000.0 - 2700.0

For the recommended Standard Application range see Table 97.

INSTALLATION INSTRUCTIONS

Glyd Ring® T is installed according to information on page 264 to 266

Closed groove installation applies same dimensions as for Turcon® Glyd Ring® in Table 88 page 266.

RECOMMENDED MATERIALS

The following material combinations have proven effective for hydraulic applications:

Turcon® Glyd Ring® T in Turcon® M12
All round material for light to heavy hydraulic applications with linear or helical movements in mineral oils, flame retardant hydarulic fluids HFC, phosphate ester, bio-oils or fluids having low lubricating properties.

O-Ring:	NBR 70 Shore A	N
	FKM 70 Shore A	V
Set code:	M12N or M12V	

Turcon® Glyd Ring® T in Turcon® T46
For medium to heavy applications with linear movements in mineral oils and other media with good lubrication:

O-Ring:	NBR 70 Shore A	N
	FKM 70 Shore A	V
Set code:	T46N or T46V	

For specific applications, all Turcon® materials are available. Other material combinations are listed in Table 96.

Table 96: Turcon® and Zurcon® Materials for Glyd Ring® T

Material, Applications, Properties	Code	O-Ring Material Shore A	Code	O-Ring Operating Temp.* °C	Mating Surface Material	MPa max. Dynamic
Turcon® M12 First material choice for seals in linear motion Overall improved properties For new constructions and updating For all commonly applied hydraulic fluids including fluids with low lubrication performance Lowest friction and best sliding properties Lowest wear on seals Improved absorption of abrasive contaminants Low wear or abrasion of counter surface BAM tested Mineral fiber and Additives filled Color: Dark gray	M12	NBR 70	N	-30 to +100	Steel Steel hardened Cast iron Stainless steel Titanium	40
		NBR 70 Low temp.	T	-45 to +80		
		FKM 70	V	-10 to +200		
Turcon® T40 For lubricating and non-lubricating fluids Water hydraulics Surface texture is not suitable for gas sealing Carbon fiber filled Color: Gray	T40	NBR 70	N	-30 to +100	Steel Steel hardened Cast iron Stainless steel Aluminum	25
		NBR 70 Low temp.	T	-45 to +80		
		FKM 70	V	-10 to +200		
		EPDM 70	E**	-45 to +145		
Turcon® T46 For lubricated hydraulics in linear motion High compressive strength High extrusion resistance Very good sliding and wear properties BAM tested Bronze filled Color: Light to dark brown, which may have variations in shading	T46	NBR 70	N	-30 to +100	Steel hardened Cast iron	50
		NBR 70 Low temp.	T	-45 to +80		
		FKM 70	V	-10 to +200		
Zurcon® Z51*** For mineral oil based fluids Very high abrasion and extrusion resistance For counter surface with rougher surface finish Limited chemical resistance Max. working temperature 110 °C Cast polyurethane Color: Yellow to light-brown	Z51	NBR 70	N	-30 to +100	Steel Steel hardened Cast iron Stainless steel Ceramic coating	60
		NBR 70 Low temp.	T	-45 to +80		

Table continues on next page

Material, Applications, Properties	Code	O-Ring Material Shore A	Code	O-Ring Operating Temp.* °C	Mating Surface Material	MPa max. Dyna-mic
Zurcon® Z80 For lubricating and non-lubricating fluids Water based fluids, air and gases Dry air pneumatics High abrasion and extrusion resistance For service in abrasive conditions and media with particles Good chemical resistance Limited temperature capability (-60 to +80 °C) UHMWPE (Ultra High Molecular Weight Polyethylene) Color: White to off-white	Z80	NBR 70	N	-30 to +100	Steel Steel hardened Stainless steel Aluminum Ceramic coating	35
		NBR 70 Low temp.	T	-45 to +80		
		EPDM 70	E**	-45 to +145		

* The O-Ring Operation Temperature is only valid in mineral hydraulic oil (except EPDM).

** Material not suitable for mineral oils.

*** Max. diameter 2300 mm.

BAM: Tested by "Bundesanstalt Materialprufung, Germany".

Highlighted materials are recommended.

Installation Recommendation

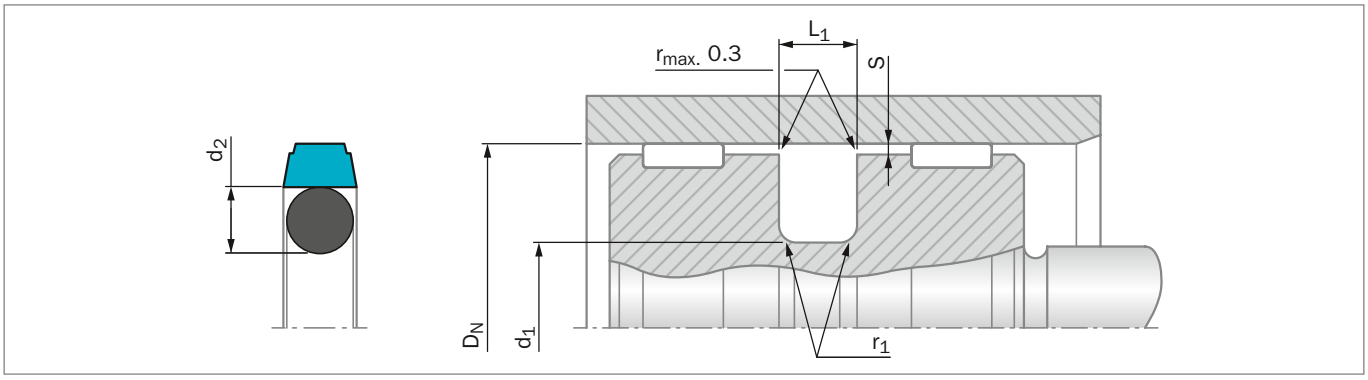

Figure 112: Installation Drawing

Table 97: Installation Dimensions – Standard Recommendations

Series No.	Bore Diameter D_N H9			Groove Diameter	Groove Width	Radius	Radial Clearance S_{max}*			O-Ring Cross Section
	Standard Application	Light Application	Heavy Duty Application	d_1 h9	L_1 +0.2	$r_{1\,max}$	10 MPa	20 MPa	40 MPa	d_2
PT00	8 - 15.9	16 - 39.9	–	D_N - 4.9	2.2	0.4	0.40	0.30	0.20	1.78
PT01	16 - 39.9	40 - 79.9	–	D_N - 7.5	3.2	0.6	0.60	0.50	0.30	2.62
PT02	40 - 79.9	80 - 132.9	16 - 39.9	D_N - 11.0	4.2	1.0	0.70	0.50	0.30	3.53
PT03	80 - 132.9	133 - 329.9	40 - 79.9	D_N - 15.5	6.3	1.3	0.80	0.60	0.40	5.33
PT04	133 - 329.9	330 - 669.9	80 - 132.9	D_N - 21.0	8.1	1.8	0.80	0.60	0.40	7.00
PT08	330 - 669.9	670 - 999.9	133 - 329.9	D_N - 24.5	8.1	1.8	0.90	0.70	0.50	7.00
PT05	670 - 999.9	–	310 - 669.9	D_N - 28.0	9.5	2.5	1.00	0.80	0.60	8.40
PT05X	–	1000 - 1200	–	D_N - 28.0	9.5	2.5	1.00	0.80	0.60	8.40
PT06**	–	–	670 - 999.9	D_N - 38.0	13.8	3.0	1.20	0.90	0.70	12.00
PT06X**	1000 - 2700	–	–	D_N - 38.0	13.8	3.0	1.20	0.90	0.70	12.00

* At pressures **> 40 MPa** use diameter tolerance H8/f8 (bore/piston) in the area of the seal or consult your local Trelleborg Sealing Solutions marketing company for alternative material or profiles.
Slydring® / Wear Rings are not applicable at very small radial clearances please consult the Slydring® catalog.
** O-Rings with 12 mm cross section are delivered as special profile ring.

ORDERING EXAMPLE

Turcon® Glyd Ring® T complete with O-Ring, standard application:

Series:	PT03 from Table 97
Bore diameter:	D_N = 80.0 mm
TSS Part No.:	PT0300800 from Table 98

Select the material from Table 96. The corresponding code numbers are appended to the TSS Part No. Together these form the TSS Article Number. The TSS Article Number for all intermediate sizes can be determined by following the example:

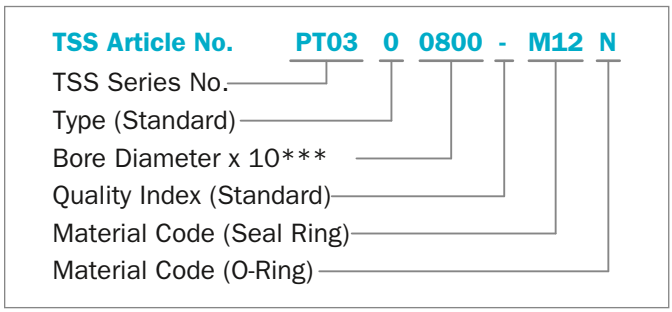

*** For diameters $D_N \geq 1000.0$ mm multiply only by factor 1.
Example: PT06 for diameter D_N = 1200.0 mm
TSS Article No.: PT06**X1200** - M12N

Table 98: Installation Dimensions / TSS Part No.

Bore Dia. D_N H9	Groove Dia. d_1 h9	Groove Width L_1 +0.2	TSS Part No.	O-Ring Dimensions
8.0	**3.1**	**2.2**	**PT0000080**	**2.57 x 1.78**
10.0	**5.1**	**2.2**	**PT0000100**	**4.47 x 1.78**
12.0	**7.1**	**2.2**	**PT0000120**	**6.70 x 1.80**
14.0	9.1	2.2	PT0000140	8.75 x 1.80
15.0	7.5	3.2	PT0100150	6.98 x 2.62
15.8	10.9	2.2	PT0000158	10.60 x 1.80
16.0	**11.1**	**2.2**	**PT0000160**	**10.60 x 1.80**
16.0	**8.5**	**3.2**	**PT0100160**	**7.59 x 2.62**
18.0	13.1	2.2	PT0000180	12.42 x 1.78
18.0	10.5	3.2	PT0100180	9.19 x 2.62
19.05	11.5	3.2	PT0100190	10.77 x 2.62
20.0	**15.1**	**2.2**	**PT0000200**	**14.00 x 1.78**
20.0	**12.5**	**3.2**	**PT0100200**	**12.37 x 2.62**
21.0	13.5	3.2	PT0100210	12.37 x 2.62
22.0	17.1	2.2	PT0000220	17.17 x 1.78
22.0	14.5	3.2	PT0100220	13.94 x 2.62
24.0	16.5	3.2	PT0100240	15.54 x 2.62
25.0	**20.1**	**2.2**	**PT0000250**	**19.00 x 1.80**
25.0	**17.5**	**3.2**	**PT0100250**	**17.12 x 2.62**
25.0	**14.0**	**4.2**	**PT0200250**	**13.87 x 3.53**
25.4	20.5	2.2	PT0000254	20.35 x 1.78
28.0	20.5	3.2	PT0100280	20.29 x 2.62
30.0	22.5	3.2	PT0100300	21.89 x 2.62
32.0	27.1	2.2	PT0000320	26.70 x 1.78
32.0	**24.5**	**3.2**	**PT0100320**	**23.47 x 2.62**
32.0	**21.0**	**4.2**	**PT0200320**	**20.22 x 3.53**
35.0	27.5	3.2	PT0100350	26.64 x 2.62
35.0	24.0	4.2	PT0200350	23.40 x 3.53
36.0	28.5	3.2	PT0100360	28.24 x 2.62
38.0	30.5	3.2	PT0100380	29.82 x 2.62
40.0	**32.5**	**3.2**	**PT0100400**	**31.42 x 2.62**
40.0	**29.0**	**4.2**	**PT0200400**	**28.17 x 3.53**
42.0	31.0	4.2	PT0200420	29.75 x 3.53
44.45	36.95	3.2	PT0100444	36.17 x 2.62
45.0	34.0	4.2	PT0200450	32.92 x 3.53
48.0	37.0	4.2	PT0200480	36.09 x 3.53
50.0	**42.5**	**3.2**	**PT0100500**	**40.94 x 2.62**
50.0	**39.0**	**4.2**	**PT0200500**	**37.69 x 3.53**
50.0	**34.5**	**6.3**	**PT0300500**	**32.69 x 5.33**
50.8	43.3	3.2	PT0100508	42.52 x 2.62
50.8	39.8	4.2	PT0200508	37.69 x 3.53
52.0	41.0	4.2	PT0200520	40.87 x 3.53
53.0	42.0	4.2	PT0200530	40.87 x 3.53
55.0	44.0	4.2	PT0200550	44.04 x 3.53
57.0	46.0	4.2	PT0200570	44.04 x 3.53
58.0	47.0	4.2	PT0200580	47.22 x 3.53
60.0	49.0	4.2	PT0200600	47.22 x 3.53
62.0	51.0	4.2	PT0200620	50.39 x 3.53
63.0	**52.0**	**4.2**	**PT0200630**	**50.39 x 3.53**
63.0	**47.5**	**6.3**	**PT0300630**	**46.99 x 5.33**
65.0	54.0	4.2	PT0200650	53.57 x 3.53
68.0	57.0	4.2	PT0200680	56.74 x 3.53
70.0	59.0	4.2	PT0200700	56.74 x 3.53
70.0	54.5	6.3	PT0300700	53.34 x 5.33
75.0	64.0	4.2	PT0200750	63.09 x 3.53
75.0	59.5	6.3	PT0300750	56.52 x 5.33
80.0	**69.0**	**4.2**	**PT0200800**	**66.27 x 3.53**
80.0	**64.5**	**6.3**	**PT0300800**	**62.87 x 5.33**
80.0	**59.0**	**8.1**	**PT0400800**	**58.00 x 7.00**
82.5	67.0	6.3	PT0300825	66.04 x 5.33
85.0	69.5	6.3	PT0300850	69.22 x 5.33
85.0	64.0	8.1	PT0400850	63.00 x 7.00
90.0	79.0	4.2	PT0200900	78.97 x 3.53
90.0	74.5	6.3	PT0300900	72.39 x 5.33
90.0	69.0	8.1	PT0400900	68.00 x 7.00
95.0	84.0	4.2	PT0200950	82.14 x 3.53
95.0	79.5	6.3	PT0300950	78.74 x 5.33
95.0	74.0	8.1	PT0400950	73.00 x 7.00
100.0	**89.0**	**4.2**	**PT0201000**	**88.49 x 3.53**
100.0	**84.5**	**6.3**	**PT0301000**	**81.92 x 5.33**
100.0	**79.0**	**8.1**	**PT0401000**	**78.00 x 7.00**
101.6	86.1	6.3	PT0301016	85.09 x 5.33
105.0	94.0	4.2	PT0201050	91.67 x 3.53
105.0	89.5	6.3	PT0301050	88.27 x 5.33
108.0	92.5	6.3	PT0301080	91.44 x 5.33
110.0	99.0	4.2	PT0201100	98.02 x 3.53
110.0	94.5	6.3	PT0301100	91.44 x 5.33
110.0	89.0	8.1	PT0401100	88.00 x 7.00
115.0	99.5	6.3	PT0301150	97.79 x 5.33
120.0	109.0	4.2	PT0201200	107.54 x 3.53

Bore Dia. D_N H9	Groove Dia. d_1 h9	Groove Width L_1 +0.2	TSS Part No.	O-Ring Dimensions
120.0	104.5	6.3	PT0301200	100.97 x 5.33
120.0	99.0	8.1	PT0401200	98.00 x 7.00
125.0	**114.0**	**4.2**	**PT0201250**	**113.89 x 3.53**
125.0	**109.5**	**6.3**	**PT0301250**	**107.32 x 5.33**
125.0	**104.0**	**8.1**	**PT0401250**	**103.00 x 7.00**
127.0	111.5	6.3	PT0301270	110.49 x 5.33
130.0	114.5	6.3	PT0301300	113.67 x 5.33
130.0	109.0	8.1	PT0401300	108.00 x 7.00
132.0	121.0	4.2	PT0201320	120.24 x 3.53
135.0	114.0	8.1	PT0401350	113.67 x 7.00
140.0	124.5	6.3	PT0301400	123.19 x 5.33
140.0	119.0	8.1	PT0401400	116.84 x 7.00
145.0	129.5	6.3	PT0301450	126.37 x 5.33
145.0	124.0	8.1	PT0401450	123.19 x 7.00
150.0	134.5	6.3	PT0301500	132.72 x 5.33
150.0	129.0	8.1	PT0401500	126.37 x 7.00
155.0	134.0	8.1	PT0401550	132.72 x 7.00
160.0	**144.5**	**6.3**	**PT0301600**	**142.24 x 5.33**
160.0	**139.0**	**8.1**	**PT0401600**	**135.89 x 7.00**
165.0	144.0	8.1	PT0401650	142.24 x 7.00
170.0	149.0	8.1	PT0401700	145.42 x 7.00
175.0	154.0	8.1	PT0401750	151.77 x 7.00
180.0	164.5	6.3	PT0301800	164.47 x 5.33
180.0	159.0	8.1	PT0401800	158.12 x 7.00
190.0	169.0	8.1	PT0401900	164.47 x 7.00
194.0	178.5	6.3	PT0301940	177.17 x 5.33
200.0	**184.5**	**6.3**	**PT0302000**	**183.52 x 5.33**
200.0	**179.0**	**8.1**	**PT0402000**	**177.17 x 7.00**
205.0	184.0	8.1	PT0402050	183.52 x 7.00
210.0	189.0	8.1	PT0402100	183.52 x 7.00
215.0	194.0	8.1	PT0402150	189.87 x 7.00
220.0	199.0	8.1	PT0402200	196.22 x 7.00
230.0	214.5	6.3	PT0302300	208.92 x 5.33
230.0	209.0	8.1	PT0402300	202.57 x 7.00
240.0	219.0	8.1	PT0402400	215.27 x 7.00
250.0	**234.5**	**6.3**	**PT0302500**	**234.32 x 5.33**
250.0	**229.0**	**8.1**	**PT0402500**	**227.97 x 7.00**
250.0	**225.5**	**8.1**	**PT0802500**	**215.27 x 7.00**
254.0	233.0	8.1	PT0402540	227.97 x 7.00
260.0	239.0	8.1	PT0402600	240.67 x 7.00

Bore Dia. D_N H9	Groove Dia. d_1 h9	Groove Width L_1 +0.2	TSS Part No.	O-Ring Dimensions
265.0	244.0	8.1	PT0402650	240.67 x 7.00
268.0	247.0	8.1	PT0402680	240.67 x 7.00
270.0	249.0	8.1	PT0402700	240.67 x 7.00
280.0	259.0	8.1	PT0402800	253.37 x 7.00
290.0	269.0	8.1	PT0402900	266.07 x 7.00
300.0	279.0	8.1	PT0403000	278.77 x 7.00
300.0	275.5	8.1	PT0803000	266.07 x 7.00
304.8	283.8	8.1	PT0403048	278.77 x 7.00
310.0	289.0	8.1	PT0403100	278.77 x 7.00
320.0	**299.0**	**8.1**	**PT0403200**	**291.47 x 7.00**
320.0	**295.5**	**8.1**	**PT0803200**	**291.47 x 7.00**
330.0	305.5	8.1	PT0803300	304.17 x 7.00
340.0	315.5	8.1	PT0803400	316.87 x 7.00
350.0	325.5	8.1	PT0803500	316.87 x 7.00
360.0	335.5	8.1	PT0803600	329.57 x 7.00
370.0	345.5	8.1	PT0803700	342.27 x 7.00
380.0	355.5	8.1	PT0803800	354.97 x 7.00
400.0	**375.5**	**8.1**	**PT0804000**	**367.67 x 7.00**
420.0	395.5	8.1	PT0804200	393.07 x 7.00
430.0	405.5	8.1	PT0804300	405.26 x 7.00
440.0	415.5	8.1	PT0804400	405.26 x 7.00
450.0	425.5	8.1	PT0804500	417.96 x 7.00
460.0	435.5	8.1	PT0804600	430.66 x 7.00
480.0	455.5	8.1	PT0804800	456.06 x 7.00
500.0	**475.5**	**8.1**	**PT0805000**	**468.76 x 7.00**
555.0	530.5	8.1	PT0805550	532.26 x 7.00
600.0	575.5	8.1	PT0806000	557.66 x 7.00
640.0	615.5	8.1	PT0806400	608.08 x 7.00
660.0	635.5	8.1	PT0806600	633.48 x 7.00
700.0	672.0	9.5	PT0507000	670.00 x 8.40
710.0	682.0	9.5	PT0507100	680.00 x 8.40
740.0	712.0	9.5	PT0507400	710.00 x 8.40
780.0	752.0	9.5	PT0507800	750.00 x 8.40
800.0	772.0	9.5	PT0508000	770.00 x 8.40
900.0	872.0	9.5	PT0509000	870.00 x 8.40
1000.0	972.0	9.5	PT05X1000	970.00 x 8.40
1000.0	962.0	13.8	PT06X1000	960.00 x 12.00
1050.0	1022.0	9.5	PT05X1050	1020.00 x 8.40
1065.0	1027.0	13.8	PT06X1065	1025.00 x 12.00
1070.0	1032.0	13.8	PT06X1070	1030.00 x 12.00

Bore Dia.	Groove Dia.	Groove Width	TSS Part No.	O-Ring Dimensions
D_N H9	d_1 h9	L_1 +0.2		
1200.0	1172.0	9.5	PT05X1200	1170.00 x 8.40
1200.0	1162.0	13.8	PT06X1200	1160.00 x 12.00
1225.0	1187.0	13.8	PT06X1225	1185.00 x 12.00
1500.0	1462.0	13.8	PT06X1500	1460.00 x 12.00
2000.0	1962.0	13.8	PT06X2000	1960.00 x 12.00
2700.0	2662.0	13.8	PT06X2700	2660.00 x 12.00

All dimensions in **bold** type are suitable for installation in grooves to ISO 7425-1, bore diameter in accordance with ISO 3320.

Other dimensions and all intermediate sizes up to 2700 mm diameter including inch sizes can be supplied.

All O-Rings with 12 mm cross section are delivered as special profile ring.

Turcon® Glyd Ring® Hz

Double-acting

Rubber-energized plastic-faced seal

Material:
Turcon®, Zurcon® and Elastomer

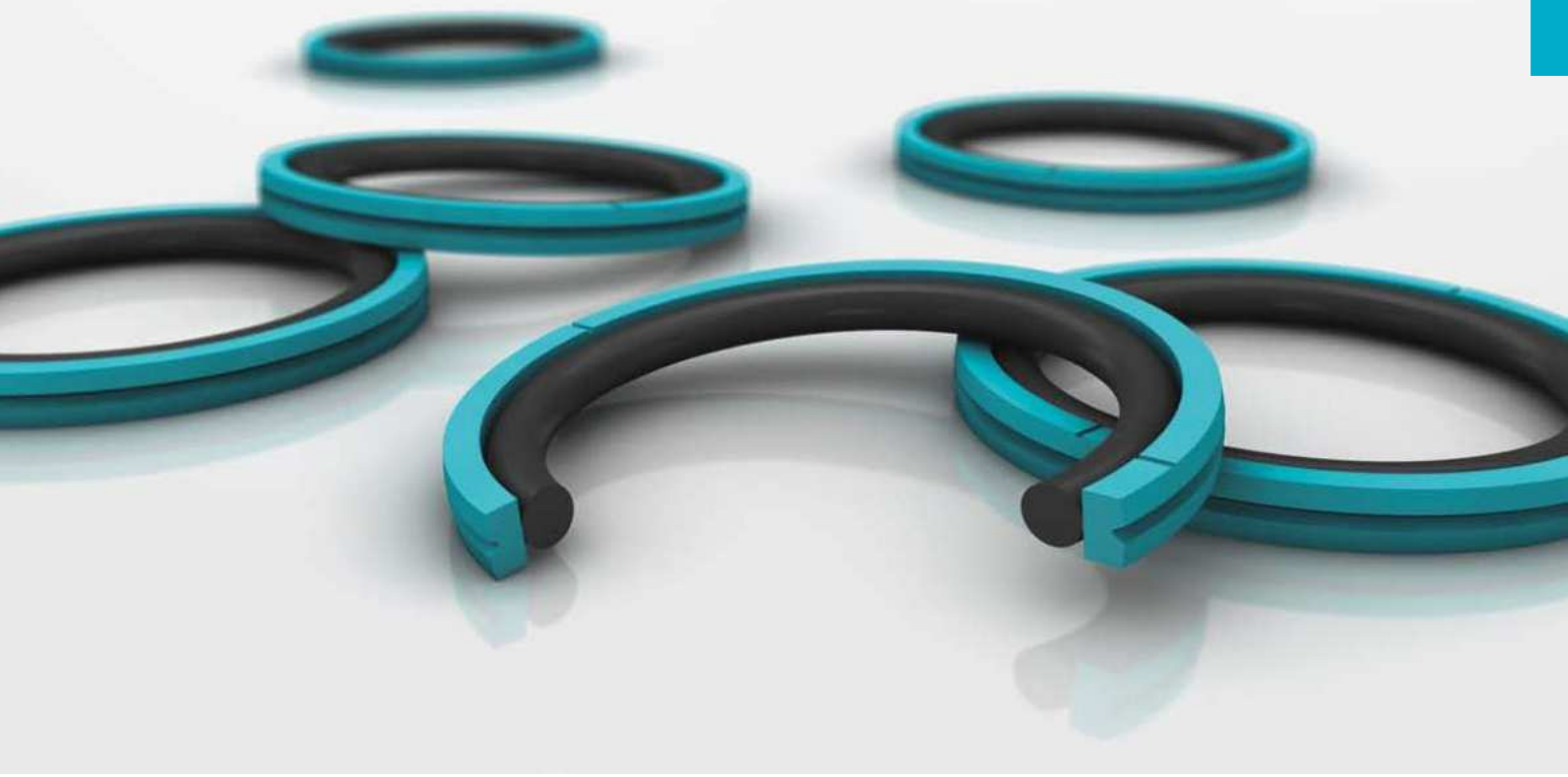

Turcon® Glyd Ring® Hz

Description

Glyd Ring® Hz is a symmetric single and double acting piston seal particular for applications with short-stroke high-frequency linear movements. It is designed to fit into ISO 7425-1 housing grooves.

Glyd Ring® Hz is wider than Turcon® Glyd Ring® giving a tighter fit in the housing groove and limiting its axial movement. It also prevents the seal from being damaged under short-stroke high-frequency movement. Furthermore it eliminates the risk of wear between O-Ring and seal.

Glyd Ring® Hz has notches on both sides to ensure system pressure instantly can activate the O-Ring under the seal despite the tighter fit and the fast alternation of pressure direction.

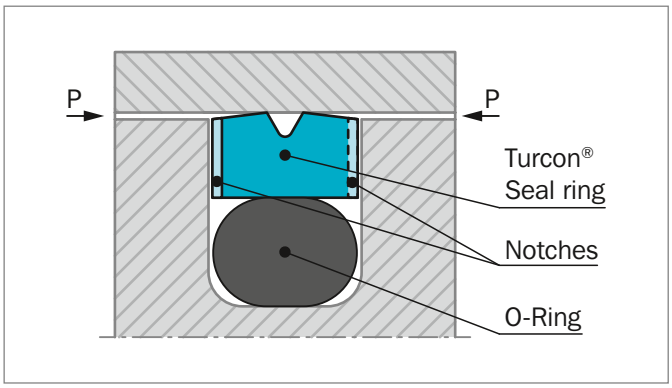

Figure 113: Turcon® Glyd Ring® Hz – short-stroke

The angled contact faces ensure that oil film is not scraped away from the surface but is transported into the groove in the middle of the contact area forming an oil reservoir for lubrication. Wear particles are also likely to be captured in this groove, thus preventing them from embedding in the surface where the highest contact force occurs.

DEFINITION

Short-stroke high-frequency movements are conditions, which in combination can cause problems, in hydraulic systems:

Short-Stroke: ≤ 3 x G (Groove width)
Very short reciprocating movements can cause reduced service life due to insufficient lubrication film, giving an increasing temperature on a limited area. These factors increase wear on seal and hardware and wear particles will not be removed from the seal face.

High-Frequency: Reciprocating movement above 5 Hz.
With an increasing frequency the formation of lubrication under the contact face is reduced. High-frequency is most often occurring in connection with short-strokes. These two types of movements together accelerate the wear on hardware and seal.

ADVANTGES

- Seal face gets lubricated in short-stroke high-frequency linear movements
- Low friction
- No stick-slip effect
- Single and double acting
- High wear resistance
- Installation grooves acc. to ISO 7425-1
- No adhesive effect to the mating surface during long period of inactivity or storage
- Available for all cylinder diameters up to 999.9 mm. (For diameter ≥ 1000 mm TSS special article number is required)

APPLICATION EXAMPLES

Glyd Ring® Hz has been successfully implemented in a large variety of applications as double acting piston seal for hydraulic components such as:

- Injection molding machines
- Machine tools
- Press brakes
- Handling machinery
- Servo equipment
- Pressure intensifiers
- Shock absorbers
- Wind power pitch cylinders

OPERATING CONDITIONS

Pressure:	Up to 30 MPa with mineral oil (depending on seal material)
Speed:	Up to 15 m/s with linear movements
Temperature:	-45 °C to +200 °C * depending on Seal and O-Ring material
Media:	Mineral oil and other fluids with very high lubricity depending on temperature, seal and O-Ring material compatibility
Clearance:	The maximum permissible radial clearance S_{max} is shown in Table 100 as a function of the operating pressure and functional diameter.

IMPORTANT NOTE

The above data are maximum values and cannot be used at the same time, e.g. the maximum operating speed depends on material type, pressure, temperature and gap value. Temperature range also depends on media

* In the case of unpressurized applications in temperatures below 0 °C please contact your local Trelleborg Sealing Solutions marketing company for more information!

HARDWARE

Short-stroke high-frequency can cause heavy wear on hardware due to poor lubrication under the seal and the fact that wear products cannot be removed from the contact area. The hardest possible hardware material should be recommended, especially when system pressure is above 10 MPa.

INSTALLATION INSTRUCTIONS

Glyd Ring® Hz is installed according to information on page 264 to 266.

Closed groove installation applies the same limits for cylinder diameter D_N as for Turcon® Glyd Ring® in Table 88 page 266.

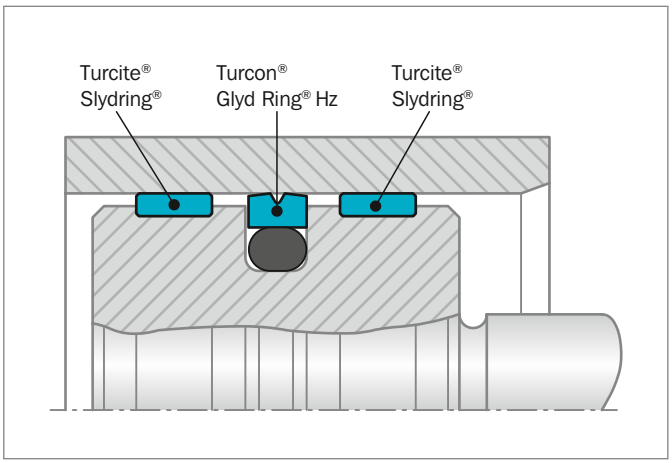

Figure 114: Turcon® Glyd Ring® Hz installed with Turcite® Slydring®

Tandem seal installation of Glyd Ring® Hz cannot be recommended as the short-strokes create a risk of pressure build-up between the seals.

RECOMMENDED MATERIALS

The following material combinations have proven effective for short-stroke and/or high-frequency applications:

Turcon® Glyd Ring® Hz in Turcon® M12
All round material for hydraulic applications with linear, short-stroke and/or high-frequency movements in mineral oils and fluids having high lubricating properties:

O-Ring:	NBR 70 Shore A	N
	FKM 70 Shore A	V
	depending on medium and temperature	
Set code:	M12N or M12V	

Turcon® Glyd Ring® Hz in Turcon® T49
For medium to heavy applications with linear, short-stroke and/or high-frequency movements in mineral oils:

O-Ring:	NBR 70 Shore A	N
	FKM 70 Shore A	V
	depending on medium and temperature	
Set code:	T49N or T49V	

Turcon® Glyd Ring® Hz in Turcon® T40
For light to medium applications with linear, short-stroke and/or high-frequency movements in fluids with lower lubricating properties:

O-Ring:	NBR 70 Shore A	N
	FKM 70 Shore A	V
	EPDM, 70 Shore A	E
	depending on medium and temperature	
Set code:	T40N, T40V or T40E	

Zurcon® Glyd Ring® Hz in Zurcon® Z80
For light applications with linear, short-stroke and/or high-frequency movements in water based fluids, air and gases at reduced pressure and frequencies due to the temperature limitation of the material:

O-Ring:	NBR 70 Shore A	N
	EPDM, 70 Shore A	E
	depending on medium and temperature	
Set code:	Z80N or Z80E	

Table 99: Turcon® and Zurcon® Materials for Glyd Ring® Hz

Material, Applications, Properties	Code	O-Ring Material Shore A	Code	O-Ring Operating Temp.* °C	Mating Surface Material	MPa max. Dyna-mic
Turcon® M12 First material choice for seals in linear motion with high-frequency and short-strokes For new constructions and updating For commonly applied hydraulic fluids Lowest friction and best sliding properties Lowest wear on seals Improved absorption of abrasive contaminants Low wear or abrasion of counter surface BAM tested Mineral fiber and Additives filled Color: Dark gray	M12	NBR 70	N	-30 to +100	Steel (tubes) Steel hardened Cast iron Stainless steel Titanium	30
		NBR 70 Low temp.	T	-45 to +80		
		FKM 70	V	-10 to +200		
Turcon® T40 For lubricating fluids and fluids with lower lubrication performance Water hydraulics at reduced pressure and frequency Surface texture is only suitable for gas sealing when lubricated with fluid Carbon fiber filled Color: Gray	T40	NBR 70	N	-30 to +100	Steel Steel hardened Cast iron Stainless steel Aluminum	25
		NBR 70 Low temp.	T	-45 to +80		
		FKM 70	V	-10 to +200		
		EPDM 70	E**	-45 to +145		
Turcon® T49 For lubricated hydraulics in linear motion High compressive strength High extrusion resistance Very good sliding and wear properties Surface treated for very quick run-in BAM tested Bronze filled Color: Light to dark brown, which may have variations in shading	T49	NBR 70	N	-30 to +100	Steel (tubes) Steel hardened Cast iron	30
		NBR 70 Low temp.	T	-45 to +80		
		FKM 70	V	-10 to +200		

Table continues on next page

Material, Applications, Properties	Code	O-Ring Material Shore A	Code	O-Ring Operating Temp.* °C	Mating Surface Material	MPa max. Dyna-mic
Zurcon® Z80 For low frequencies due to the temperature limitation of the material For lubricating fluids and fluids with lower lubrication performance Water based fluids, air and gases at reduced pressure Dry air pneumatics High abrasion and extrusion resistance For service in abrasive conditions and media with particles Good chemical resistance Limited temperature capability (-60 to +80 °C) UHMWPE (Ultra High Molecular Weight Polyethylene) Color: White to off-white	Z80	NBR 70	N	-30 to (+100)	Steel Steel hardened Stainless steel Aluminum Ceramic coating	25
		NBR 70 Low temp.	T	-45 to +80		
		EPDM 70	E**	-45 to (+145)		

* The O-Ring Operation Temperature is only valid in mineral hydraulic oil (except EPDM).

** Material not suitable for mineral oils.

BAM: Tested by "Bundesanstalt Materialprufung, Germany".

Highlighted materials are recommended.

Installation Recommendation

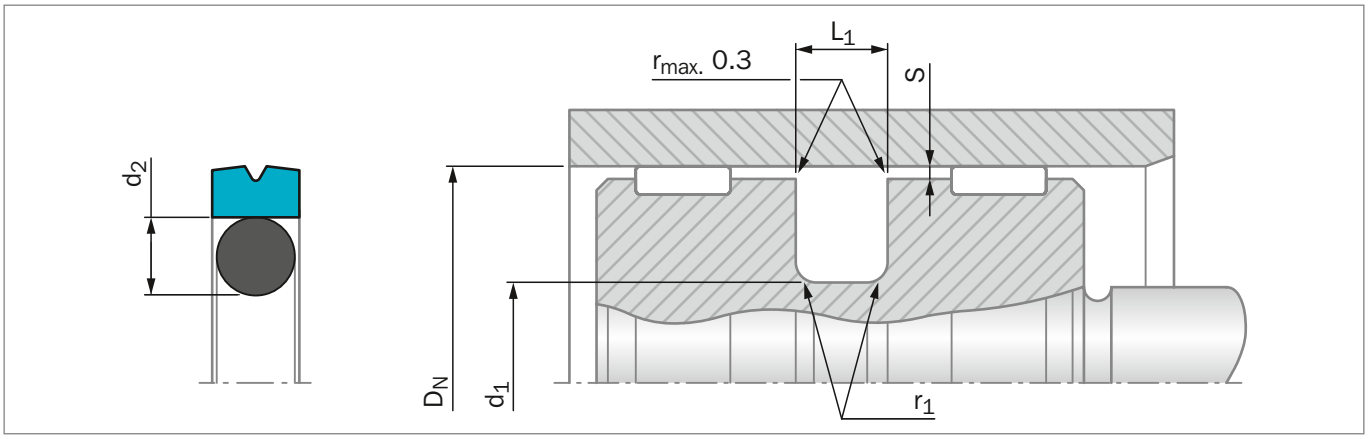

Figure 115: Installation Drawing

Table 100: Installation Dimensions – Standard Recommendations

Series No.	Bore Diameter D_N H9		Groove Diameter	Groove Width	Radius	Radial Clearance S_{max}*			O-Ring Cross Section
	Standard Application	Available Range	d_1 h9	L_1 ±0.2	$r_{1\,max}$	10 MPa	20 MPa	30 MPa	d_2
PGS0	8 – 14.9	8 – 140.0	D_N - 5.0**	2.2	0.4	0.25	0.20	0.15	1.78
PGS1	15 – 39.9	14 – 260.0	D_N - 7.5	3.2	0.6	0.40	0.35	0.20	2.62
PGS2	40 – 79.9	22 – 480.0	D_N - 11.0	4.2	1.0	0.45	0.40	0.20	3.53
PGS3	80 – 132.9	40 – 750.0	D_N - 15.5	6.3	1.3	0.55	0.45	0.25	5.33
PGS4	133 – 329.9	110 – 750.0	D_N - 21.0	8.1	1.8	0.60	0.50	0.30	7.00
PGS8***	330 – 669.9	133 – 999.9	D_N - 24.5	8.1	1.8	0.60	0.50	0.30	7.00
PGS5***	670 – 999.9	320 – 999.9	D_N - 28.0	9.5	2.5	0.65	0.55	0.35	8.40

* At pressures **> 30 MPa** use diameter tolerance H8/f8 (bore/piston) in the area of the seal or consult your local Trelleborg Sealing Solutions marketing company for alternative material or profiles.
Slydring® / Wear Rings are not applicable at very small radial clearances please consult the Slydring® catalog.
** Can also be used in Turcon® Glyd Ring® T groove D_N - 4.9 mm.
*** Grooves are not according to ISO 7425-1

ORDERING EXAMPLE

Glyd Ring® Hz complete with O-Ring, standard application:

Series:	PGS30 from Table 100
Bore Diameter:	D_N = 80.0 mm
TSS Part No.:	PGS300800 from Table 101

Select the material from Table 99. The corresponding code numbers are appended to the TSS Part No. Together they form the TSS Article Number. The TSS Article No. for all intermediate sizes can be determined by following the example:

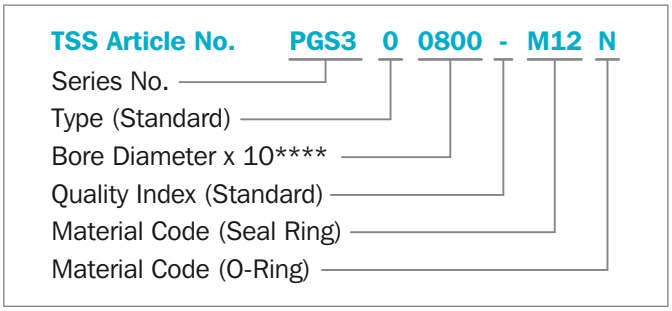

**** For diameters $D_N \geq 1000$ mm only on TSS Special Article Number.

Note:
Installation Dimensions for piston sealing the groove dimensions are identical to Glyd Ring® T and Glyd Ring® PG44.

Table 101: Installation Dimensions / TSS Part No.

Bore D_N H9	Groove Dia. d_1 h9	Groove Width L_1 +0.2	Part No.	O-Ring Sizes
8.0	**3.0**	**2.2**	**PGS000080**	**2.57 x 1.78**
10.0	**5.0**	**2.2**	**PGS000100**	**4.47 x 1.78**
12.0	**7.0**	**2.2**	**PGS000120**	**6.70 x 1.80**
14.0	9.0	2.2	PGS000140	8.75 x 1.80
15.0	7.5	3.2	PGS100150	6.93 x 2.62
16.0	**11.0**	**2.2**	**PGS000160**	**10.60 x 1.80**
18.0	13.0	2.2	PGS000180	12.42 x 1.78
18.0	10.5	3.2	PGS100180	9.19 x 2.62
19.0	11.5	3.2	PGS100190	10.77 x 2.62
20.0	**15.0**	**2.2**	**PGS000200**	**14.00 x 1.78**
20.0	**12.5**	**3.2**	**PGS100200**	**12.37 x 2.62**
21.0	13.5	3.2	PGS100210	12.37 x 2.62
22.0	17.0	2.2	PGS000220	15.60 x 1.78
22.0	14.5	3.2	PGS100220	13.94 x 2.62
24.0	16.5	3.2	PGS100240	15.54 x 2.62
25.0	**20.0**	**2.2**	**PGS000250**	**19.00 x 1.80**
25.0	**17.5**	**3.2**	**PGS100250**	**17.12 x 2.62**
25.0	**14.0**	**4.2**	**PGS200250**	**12.29 x 3.53**
25.4	20.4	2.2	PGS000254	20.35 x 1.78
28.0	20.5	3.2	PGS100280	20.29 x 2.62
30.0	22.5	3.2	PGS100300	21.89 x 2.62
32.0	**27.0**	**2.2**	**PGS000320**	**26.70 x 1.78**
32.0	**24.5**	**3.2**	**PGS100320**	**23.47 x 2.62**
32.0	**21.0**	**4.2**	**PGS200320**	**20.22 x 3.53**
35.0	27.5	3.2	PGS100350	26.64 x 2.62
35.0	24.0	4.2	PGS200350	23.40 x 3.53
36.0	28.5	3.2	PGS100360	28.24 x 2.62
38.0	30.5	3.2	PGS100380	29.82 x 2.62
40.0	**32.5**	**3.2**	**PGS100400**	**31.42 x 2.62**
40.0	**29.0**	**4.2**	**PGS200400**	**28.17 x 3.53**
42.0	31.0	4.2	PGS200420	29.75 x 3.53
44.4	36.9	3.2	PGS100444	36.17 x 2.62
45.0	34.0	4.2	PGS200450	32.92 x 3.53
48.0	37.0	4.2	PGS200480	36.09 x 3.53
50.0	**42.5**	**3.2**	**PGS100500**	**40.94 x 2.62**
50.0	**39.0**	**4.2**	**PGS200500**	**37.69 x 3.53**
50.0	**34.5**	**6.3**	**PGS300500**	**32.69 x 5.33**
50.8	43.3	3.2	PGS100508	42.52 x 2.62
50.8	39.8	4.2	PGS200508	37.69 x 3.53
52.0	41.0	4.2	PGS200520	40.87 x 3.53

Bore D_N H9	Groove Dia. d_1 h9	Groove Width L_1 +0.2	Part No.	O-Ring Sizes
53.0	42.0	4.2	PGS200530	40.87 x 3.53
55.0	44.0	4.2	PGS200550	44.04 x 3.53
57.0	46.0	4.2	PGS200570	44.04 x 3.53
58.0	47.0	4.2	PGS200580	47.22 x 3.53
60.0	49.0	4.2	PGS200600	47.22 x 3.53
62.0	51.0	4.2	PGS200620	50.39 x 3.53
63.0	**52.0**	**4.2**	**PGS200630**	**50.39 x 3.53**
63.0	**47.5**	**6.3**	**PGS300630**	**46.99 x 5.33**
65.0	54.0	4.2	PGS200650	53.57 x 3.53
68.0	57.0	4.2	PGS200680	56.74 x 3.53
70.0	59.0	4.2	PGS200700	56.74 x 3.53
70.0	54.5	6.3	PGS300700	53.34 x 5.33
75.0	64.0	4.2	PGS200750	63.09 x 3.53
75.0	59.5	6.3	PGS300750	56.52 x 5.33
80.0	**69.0**	**4.2**	**PGS200800**	**66.27 x 3.53**
80.0	**64.5**	**6.3**	**PGS300800**	**62.87 x 5.33**
82.5	67.0	6.3	PGS300825	66.04 x 5.33
85.0	69.5	6.3	PGS300850	66.04 x 5.33
90.0	79.0	4.2	PGS200900	78.97 x 3.53
90.0	74.5	6.3	PGS300900	72.39 x 5.33
95.0	84.0	4.2	PGS200950	82.14 x 3.53
95.0	79.5	6.3	PGS300950	78.74 x 5.33
100.0	**89.0**	**4.2**	**PGS201000**	**88.49 x 3.53**
100.0	**84.5**	**6.3**	**PGS301000**	**81.92 x 5.33**
101.6	86.1	6.3	PGS301016	85.09 x 5.33
105.0	94.0	4.2	PGS201050	91.67 x 3.53
105.0	89.5	6.3	PGS301050	88.27 x 5.33
108.0	92.5	6.3	PGS301080	91.44 x 5.33
110.0	99.0	4.2	PGS201100	98.02 x 3.53
110.0	94.5	6.3	PGS301100	91.44 x 5.33
110.0	89.0	8.1	PGS401100	87.60 x 7.00
115.0	99.5	6.3	PGS301150	97.79 x 5.33
120.0	109.0	4.2	PGS201200	107.54 x 3.53
120.0	104.5	6.3	PGS301200	100.97 x 5.33
120.0	99.0	8.1	PGS401200	97.60 x 7.00
125.0	**114.0**	**4.2**	**PGS201250**	**110.72 x 3.53**
125.0	**109.5**	**6.3**	**PGS301250**	**107.32 x 5.33**
125.0	**104.0**	**8.1**	**PGS401250**	**102.60 x 7.00**
127.0	111.5	6.3	PGS301270	110.49 x 5.33
130.0	114.5	6.3	PGS301300	113.67 x 5.33

Bore D_N H9	Groove Dia. d_1 h9	Groove Width L_1 +0.2	Part No.	O-Ring Sizes
130.0	109.0	8.1	PGS401300	107.60 x 7.00
132.0	121.0	4.2	PGS201320	120.24 x 3.53
135.0	114.0	8.1	PGS401350	113.67 x 7.00
140.0	124.5	6.3	PGS301400	123.19 x 5.33
140.0	119.0	8.1	PGS401400	116.84 x 7.00
145.0	129.5	6.3	PGS301450	126.37 x 5.33
145.0	124.0	8.1	PGS401450	123.19 x 7.00
150.0	134.5	6.3	PGS301500	132.72 x 5.33
150.0	129.0	8.1	PGS401500	126.37 x 7.00
155.0	134.0	8.1	PGS401550	132.72 x 7.00
160.0	**144.5**	**6.3**	**PGS301600**	**142.24 x 5.33**
160.0	**139.0**	**8.1**	**PGS401600**	**135.89 x 7.00**
165.0	144.0	8.1	PGS401650	142.24 x 7.00
170.0	149.0	8.1	PGS401700	145.42 x 7.00
175.0	154.0	8.1	PGS401750	151.77 x 7.00
180.0	164.5	6.3	PGS301800	164.47 x 5.33
180.0	159.0	8.1	PGS401800	158.12 x 7.00
190.0	169.0	8.1	PGS401900	164.47 x 7.00
194.0	178.5	6.3	PGS301940	177.17 x 5.33
200.0	**184.5**	**6.3**	**PGS302000**	**183.52 x 5.33**
200.0	**179.0**	**8.1**	**PGS402000**	**177.17 x 7.00**
205.0	184.0	8.1	PGS402050	183.52 x 7.00
210.0	189.0	8.1	PGS402100	183.52 x 7.00
215.0	194.0	8.1	PGS402150	189.87 x 7.00
220.0	199.0	8.1	PGS402200	196.22 x 7.00
230.0	214.5	6.3	PGS302300	208.92 x 5.33
230.0	209.0	8.1	PGS402300	202.57 x 7.00
240.0	219.0	8.1	PGS402400	215.27 x 7.00
250.0	**234.5**	**6.3**	**PGS302500**	**234.32 x 5.33**
250.0	**229.0**	**8.1**	**PGS402500**	**227.97 x 7.00**
250.0	**225.5**	**8.1**	**PGS802500**	**215.27 x 7.00**
254.0	233.0	8.1	PGS402540	227.97 x 7.00
260.0	239.0	8.1	PGS402600	240.67 x 7.00
265.0	244.0	8.1	PGS402650	240.67 x 7.00
268.0	247.0	8.1	PGS402680	240.67 x 7.00
270.0	249.0	8.1	PGS402700	240.67 x 7.00

Bore D_N H9	Groove Dia. d_1 h9	Groove Width L_1 +0.2	Part No.	O-Ring Sizes
280.0	259.0	8.1	PGS402800	253.37 x 7.00
290.0	269.0	8.1	PGS402900	266.07 x 7.00
300.0	279.0	8.1	PGS403000	278.77 x 7.00
300.0	275.5	8.1	PGS803000	266.07 x 7.00
304.8	283.8	8.1	PGS403048	278.77 x 7.00
310.0	289.0	8.1	PGS403100	278.77 x 7.00
320.0	**299.0**	**8.1**	**PGS403200**	**291.47 x 7.00**
320.0	**295.5**	**8.1**	**PGS803200**	**291.47 x 7.00**
330.0	305.5	8.1	PGS803300	304.17 x 7.00
340.0	315.5	8.1	PGS803400	316.87 x 7.00
350.0	325.5	8.1	PGS803500	316.87 x 7.00
360.0	335.5	8.1	PGS803600	329.57 x 7.00
370.0	345.5	8.1	PGS803700	342.27 x 7.00
380.0	355.5	8.1	PGS803800	354.97 x 7.00
400.0	**375.5**	**8.1**	**PGS804000**	**367.67 x 7.00**
420.0	395.5	8.1	PGS804200	393.07 x 7.00
430.0	405.5	8.1	PGS804300	405.26 x 7.00
440.0	415.5	8.1	PGS804400	405.26 x 7.00
450.0	425.5	8.1	PGS804500	417.96 x 7.00
460.0	435.5	8.1	PGS804600	430.66 x 7.00
480.0	455.5	8.1	PGS804800	456.06 x 7.00
500.0	**475.5**	**8.1**	**PGS805000**	**468.76 x 7.00**
555.0	530.5	8.1	PGS805550	532.26 x 7.00
600.0	575.5	8.1	PGS806000	557.66 x 7.00
640.0	615.5	8.1	PGS806400	608.08 x 7.00
660.0	635.5	8.1	PGS806600	633.48 x 7.00
700.0	672.0	9.5	PGS507000	670.30 x 8.40
710.0	682.0	9.5	PGS507100	680.30 x 8.40
740.0	712.0	9.5	PGS507400	710.30 x 8.40
780.0	752.0	9.5	PGS507800	750.30 x 8.40
800.0	772.0	9.5	PGS508000	770.30 x 8.40
900.0	872.0	9.5	PGS509000	870.30 x 8.40

The bore diameters in **bold** type comply with the recommendations of ISO 3320.

Part No. for other dimensions and **all** intermediate dimensions up to 999.9 mm diameter including imperial (inch) dimensions can be supplied.

Larger dimensions up to 2700 mm are available upon request.

Zurcon® Glyd Ring® D

Double-acting

Rubber-energized plastic-faced seal

High Extrusion Resistance

Material:
Zurcon® and Elastomer

Zurcon Glyd Ring® D

Description

Glyd Ring® D is a double-acting seal consisting of a premium polyurethane Zurcon® Z13 seal ring and an O-Ring as energizing element (Figure 116).
The innovative D-shape design optimizes contact pressure and the two special grooves incorporated keep an oil reservoir for an adequate lubrication that minimizes heat generated by friction forces. The above features give the perfect combination of sealing performance and service life.

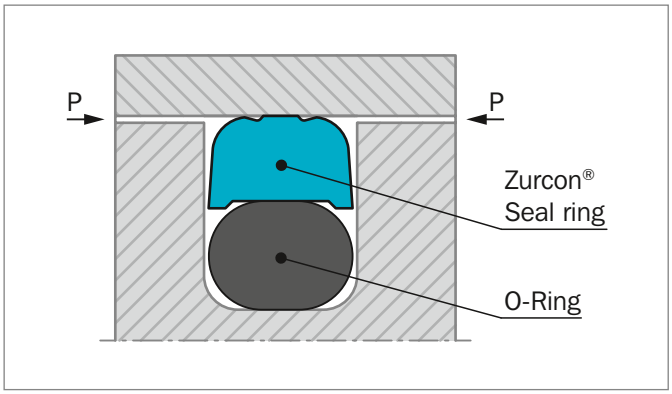

Figure 116: Zurcon® Glyd Ring® D

Zurcon® Z13 polyurethane material is the perfect partner for this innovative design. It is the latest advanced polyurethane development matching the requirements of modern hydraulic medias and cylinder bore surfaces.

Zurcon® Z13 is a 60 ShD polyurethane able to combine excellent mechanical and elastic material properties that makes it suitable to work in high pressure and temperature environment without losing performance.

It has been developed in order to have an excellent hydrolysis resistance making it compatible with a wide range of hydraulic fluids not only mineral base, but also the new environmentally friendly fluids (HEES, HEPG and HEPR) and also with fire resistant fluids both water based and water free (HFA, HFC and HFD) .

ADVANTAGES

- Extended service life in heavy duty applications
- High static and dynamic sealing effect
- Excellent abrasion and extrusion resistance
- Simple groove design, one piece piston possible, easy installation
- Grooves according to ISO 7425-1

APPLICATION EXAMPLES

Glyd Ring® D is the recommended element for double acting pistons of hydraulic components such as:

- Construction machinery
- Mobile hydraulic
- Truck cranes
- Fork lift
- Accumulators

It is particularly recommended for medium and heavy duty applications.

RECOMMENDED MATERIALS

Glyd Ring® D:	Zurcon® Z13	
O-Ring:	NBR, 70 Share A	N
	HNBR, 70 Share A	H
Set code:	Z13N or Z13H	

OPERATING CONDITIONS

Pressure:	Up to 60 MPa
Velocity:	Up to 0.5 m/s 0.8 m/s for limited time
Frequency:	Up to 5 Hz
Temperature:	-30° C to +110° C depending on O-Ring Material
Media:	Hydraulic fluids based on mineral oil, environmentally friendly and fire resistance fluids (always check O-Ring material compatibility)
Clearance:	The maximum permissible radial clearance S_{max} is shown in Table 102 as a function of the operating pressure and diameter

IMPORTANT NOTE

The above started limits for presuure ad speed are maximum values individually. Friction heat generated by the combination of pressure and speed may cause local heat built-up. Care should be taken not to apply high values for pressure and speed at the same time.

Installation Recommendation

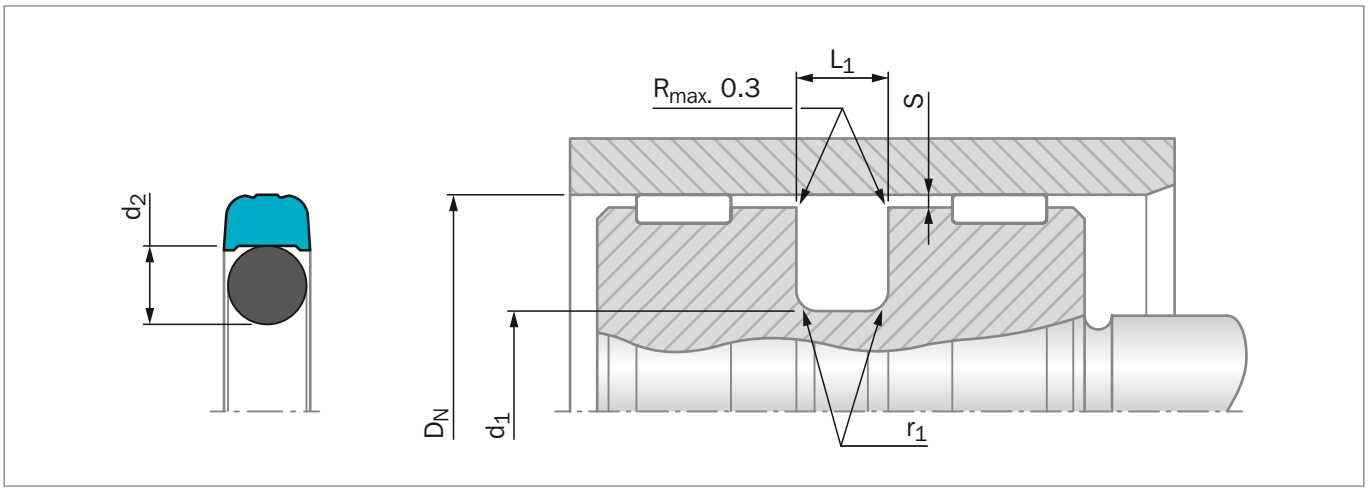

Figure 117: Installation Drawing

Table 102: Installation Dimensions – Standard Recommendations

Series No.	Diameter Range	Groove Diameter	Groove Width	Radius	Radial Clearance S_{max} @ 110°C				O-Ring Cross Section
	D_N H9	d_1 h9	L_1 ±0.2	r_1	16 MPa	26 MPa	32 MPa	40 MPa	d_2
PH41	15 – 39.9	DN – 7.5	3.2	0.6	0.3	0.2	-	-	2.62
PH42	40 – 79.9	DN – 11.0	4.2	1.0	0.4	0.3	0.2	-	3.53
PH43	80 – 132.9	DN – 15.5	6.3	1.3	0.5	0.4	0.3	0.25	5.33
PH44	133 – 329.9	DN – 21.0	8.1	1.8	0.6	0.5	0.4	0.35	7.00

ORDERING EXAMPLE

Glyd Ring D for ISO groove

Series:	PH42 from Table 102
Bore Diameter:	D_N = 63.0 mm
TSS Part No.:	PH4200630 from Table 103

Material Z13

Material code	Z13
O-Ring material code	N
Set code:	Z13N

TSS Article No. PH42 0 0630 - Z13 N

- TSS Series No. — PH42
- Type (Standard) — 0
- Bore Diameter x 10 — 0630
- Quality Index (Standard) — -
- Material Code (Seal Ring) — Z13
- Material Code (O-Ring) — N

Table 103: Installation Dimensions / TSS Part No.

Bore Dia.	Groove Dia.	Groove Width	TSS Part No.	O-Ring Dimensions
D_N H9	d_1 h9	L_1 +0.2		
30.00	22.50	3.20	PH4100300-Z13	21.89 x 2.62
32.00	**21.00**	**4.20**	**PH4200320-Z13**	**20.22 x 3.53**
40.00	**29.00**	**4.20**	**PH4200400-Z13**	**28.17 x 3.53**
45.00	34.00	4.20	PH4200450-Z13	32.92 x 3.53
50.00	**39.00**	**4.20**	**PH4200500-Z13**	**37.70 x 3.53**
55.00	44.00	4.20	PH4200550-Z13	44.04 x 3.53
60.00	49.00	4.20	PH4200600-Z13	47.22 x 3.53
63.00	**52.00**	**4.20**	**PH4200630-Z13**	**50.39 x 3.53**
65.00	54.00	4.20	PH4200650-Z13	53.57 x 3.53
70.00	59.00	4.20	PH4200700-Z13	56.74 x 3.53
75.00	64.00	4.20	PH4200750-Z13	63.09 x 3.53
80.00	**64.50**	**6.30**	**PH4300800-Z13**	**62.87 x 5.33**
85.00	69.50	6.30	PH4300850-Z13	69.22 x 5.33
90.00	74.50	6.30	PH4300900-Z13	72.39 x 5.33
100.00	**84.50**	**6.30**	**PH4301000-Z13**	**81.92 x 5.33**
105.00	89.50	6.30	PH4301050-Z13	88.27 x 5.33
110.00	94.50	6.30	PH4301100-Z13	91.44 x 5.33
120.00	104.50	6.30	PH4301200-Z13	100.97 x 5.33
125.00	**104.00**	**8.10**	**PH4401250-Z13**	**103.00 x 7.0**
130.00	109.00	8.10	PH4401300-Z13	108.00 x 7.0
140.00	119.00	8.10	PH4401400-Z13	116.84 x 7.0
160.00	**139.00**	**8.10**	**PH4401600-Z13**	**135.89 x 7.0**
200.00	**179.00**	**8.10**	**PH4402000-Z13**	**177.17 x 7.0**
250.00	**229.00**	**8.10**	**PH4402500-Z13**	**227.97 x 7.0**

All dimensions in bold type are suitable for installation in grooves to ISO 7425-1, bore dia. in accordance with ISO 3320.
Additional dimensions can be delivered on request.

Zurcon® Glyd Ring P®

Double-acting

Rubber-energized plastic-faced seal

Step Cut Sealing Element

Material:
Zurcon® Polyamid + NBR

Zurcon® Glyd Ring® P

Description

The double acting Zurcon® Glyd Ring® P is a combination of a Zurcon® based material slipper seal with a step cut and an energising rectangular elastomeric ring. It is produced with an interference fit at closed step cut which together with the squeeze of the rectangular energiser ring ensures a good sealing effect even at low pressure.

At higher system pressures, the rectangular ring is energised by the fluid, pushing the Zurcon® Glyd Ring® P against the sealing face with increased force. At high peak pressures, the Zurcon® step cut seal ring can follow ballooning of the tube without loosing the sealability.

Due to the Zurcon® high strength plastic material, two times bigger extrusion gaps are possible compared with Turcon® materials. The step cut in the ring is necessary for installation in closed grooves and for the flexibility of the seal ring due to the high stiffness of the material.

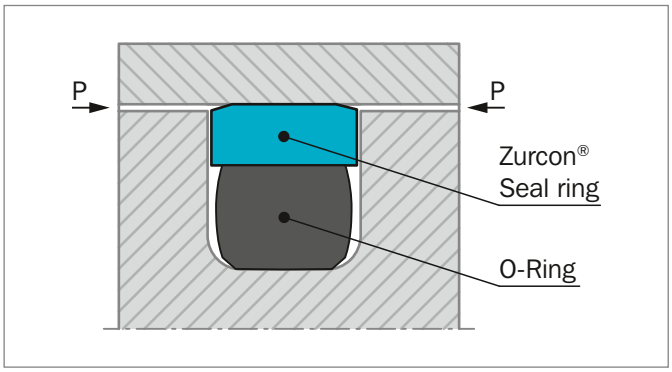

Figure 118: Zurcon® Glyd Ring® P

STEP CUT

For easy installation on the piston and for the flexibility of the seal ring a precision step cut is produced by special tool technology.

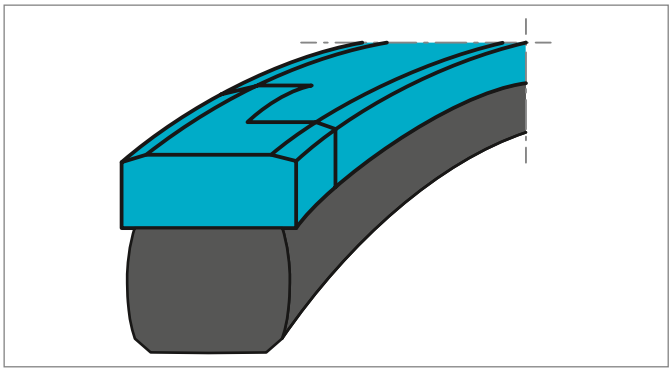

Figure 119: Step cut on Zurcon® Glyd Ring® P

ADVANTAGES

- Easy installation on piston without special tools
- Due to large extrusion gap, safe use even with soiled media
- Installation grooves acc. to ISO 7425-1
- Simple groove design, one piece piston possible
- Increased clearance compare to Turcon® Glyd Ring® seals (Approximately +50%), depending on operation conditions
- Resistent against shock loads
- High wear resistant material ensures long service life

APPLICATION EXAMPLES

- Construction machinery, e.g. excavators
- Truck cranes
- Fork lifts

It is particularly recommended for heavy duty applications.

OPERATING CONDITIONS

Zurcon® Glyd Ring® P is recommended for linear movements where the dimensional gap between piston and tube shall be as big as possible or where high pressure peaks occure during operation.

Pressure:	50 MPa standard 100 MPa pressure peak
Speed:	up to 1 m/s
Temperature:	-30 °C to +110 °C standard -40 °C to +100 °C and -15 °C to +140 °C on request with special materials
Media:	mineral oil based hydraulic fluids

IMPORTANT NOTE

The above data are maximum values and cannot be used at the same time, e.g. the maximum operating speed depends on material type, pressure, temperature and gap value.

MATERIALS

Standard Application:
For hydraulic components in mineral oils or medias with good lubricating performance.

Zurcon® seal ring:	**Zurcon® Z66**
Energiser:	Rectangular ring in NBR 70 shore A, code N
Set reference:	Z66 N

Low temperature application:

Zurcon® seal ring:	**Zurcon® Z66**
Energiser:	Rectangular ring in low temp. NBR 70 shore A, code T
Set reference:	Z66 T

High temperature application:

Zurcon® seal ring:	**Zurcon® Z66**
Energiser:	Rectangular ring in FKM 70 shore A, code V
Set reference:	Z66 V

Installation Recommendation

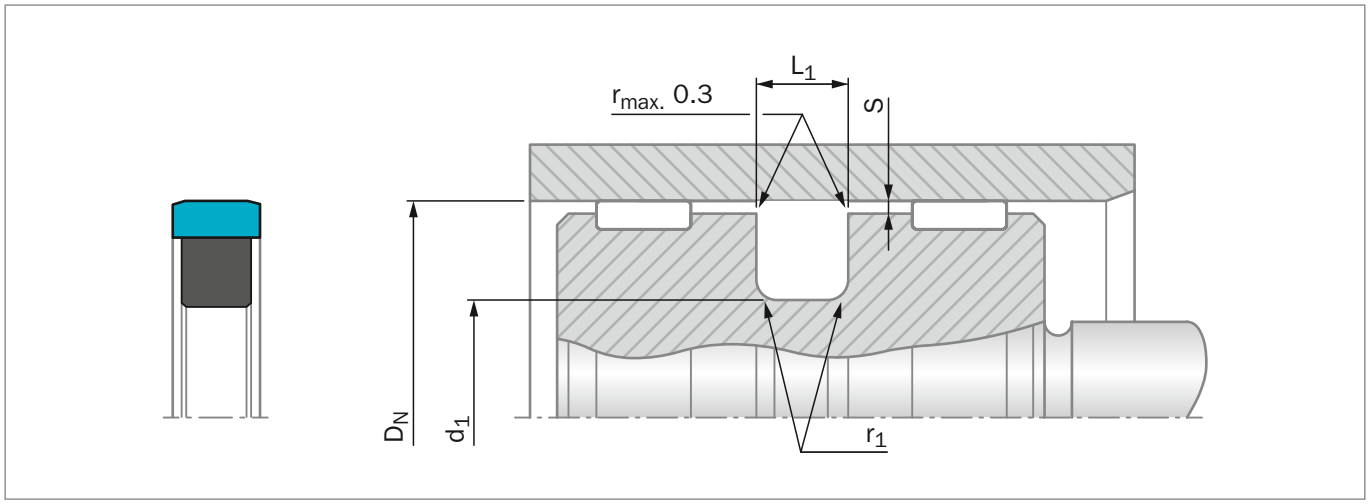

Figure 120: Installation Drawing

Table 104: Installation Dimensions

Series No.	Groove Diameter	Groove Width	Radius	Radial Clearance
	d_1 h9	L_1 +/-0.1	r_1	S_{max}
PGP2	D_N - 11.0	4.2	0.5	0.35
PGP3	D_N - 15.5	6.3	0.9	0.50
PGP4	D_N - 21.0	8.1	0.9	0.60

ORDERING EXAMPLE

Zurcon® Glyd Ring® P for ISO groove

Cylinder Bore Diameter:	D_N = 125 mm
Series No.:	PGP4 from Table 104
Part No.:	PGP401250 (from Table 105)
TSS Seal Ring Material Code:	Z66
Energiser Material Code:	N
Set Code:	Z66 N

TSS Article No. PGP4 0 1250 - Z66 N

- Series No. — PGP4
- Type (Standard) — 0
- Cylinder Bore Diameter x 10 — 1250
- Quality Index (Standard) — -
- Material Code (Seal Ring) — Z66
- Material Code (O-Ring) — N

Table 105: Preferred Series / TSS Part No.

Bore	Groove Dia.	Groove Width	TSS Part No.
D_N H9	d_1 h9	L_1 +/-0,1	
45.0	34.0	4.2	PGP200450-Z66
60.0	49.0	4.2	PGP200600-Z66
70.0	54.5	6.3	PGP300700-Z66
75.0	54.0	8.1	PGP400750-Z66
80.0	59.0	8.1	PGP400800-Z66
90.0	74.5	6.3	PGP300900-Z66
90.0	69.0	8.1	PGP400900-Z66
100.0	**84.5**	**6.3**	**PGP301000-Z66**
100.0	79.0	8.1	PGP401000-Z66
110.0	94.5	6.3	PGP301100-Z66
110.0	89.0	8.1	PGP401100-Z66
120.0	99.0	8.1	PGP401200-Z66
125.0	**109.5**	**6.3**	**PGP301250-Z66**
125.0	**104.0**	**8.1**	**PGP401250-Z66**
130.0	109.0	8.1	PGP401300-Z66
140.0	119.0	8.1	PGP401400-Z66
150.0	129.0	8.1	PGP401500-Z66
160.0	**139.0**	**8.1**	**PGP401600-Z66**
170.0	149.0	8.1	PGP401700-Z66
180.0	159.0	8.1	PGP401800-Z66
190.0	169.0	8.1	PGP401900-Z66

All dimensions in **bold** are suitable for installation in grooves to ISO 7425-1, bore diameter in accordance with ISO 3320.
Further sizes on request.

Turcon® AQ-Seal® 5

Double-acting

Rubber-energized plastic-faced seal

Material:
Turcon®, Zurcon® and Elastomer

■ Turcon® AQ-Seal® 5*

■ Description

Turcon® AQ-Seal® 5 is a patented development of the proven standard Turcon® AQ-Seal® .

The particular characteristics of AQ-Seal® 5 are the seal profile with a defined seal edge and the use of two O-Rings as energizing elements to optimize the pressure profile and to reduce gas permeability.

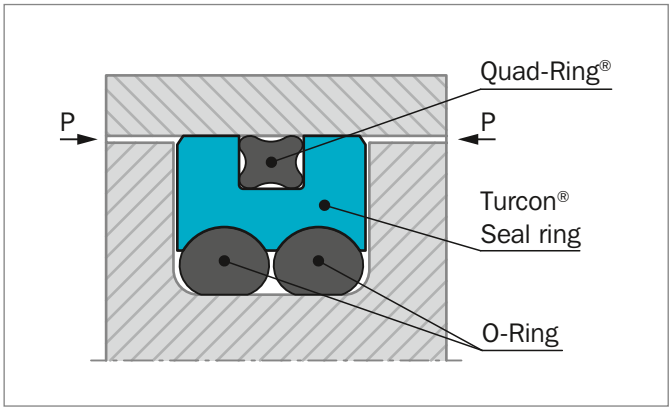

Figure 121: Turcon® AQ-Seal® 5

AQ-Seal® 5 combines the benefits of a low-friction Turcon® slipper seal with the high sealing characteristics of an elastomeric seal by incorporating a limited footprint Quad-Ring® Seal in the dynamic sealing face. This optimizes leakage control while minimizing friction.

ADVANTAGES

- High sealing effect in applications requiring media separation, e.g. fluid/fluid or fluid/gas
- Double security through the combination of low-friction special materials with elastomer seals
- Low gas permeation rate
- Higher pressure application, higher sliding speed compared to AQ-Seal®
- Outstanding sliding properties, no stick-slip effect
- Diameter from 25 to 700 mm (for sizes above use Turcon® AQ-Seal® 5 with Bean Seal, see page 436)

APPLICATION EXAMPLES

Turcon® AQ-Seal® 5 is mainly designed for heavy duty and large diameter applications and is recommended as double acting piston seal for hydraulic equipment such as:

- Mobil hydraulics
- Cranes
- Stabilizers
- Heavy duty suspension cylinders
- Hydro-pneumatic suspensions for heavy vehicles
- Machine tools
- Presses
- Rolling mills
- Servo hydraulics
- Offshore equipment
- Cylinders with retaining function over longer periods such as jacks and support cylinders

* Patent No. EP 0 424 372

OPERATING CONDITIONS

Pressure:	Up to 60 MPa with mineral oil Up to 25 MPa for media with low lubricating properties
Speed:	Up to 3 m/s with linear movements frequency up to 3 Hz
Temperature:	-30 °C to +200 °C** depending on seal, O-Ring and Quad-Ring® material
Media:	Mineral oil-based hydraulic fluids, flame retardant hydraulic fluids, environmentally friendly hydraulic fluids (bio-oils), phosphate ester, water and others, depending on temperature, seal, O-Ring and Quad-Ring® seal material compatibility see Table 106
Clearance:	The maximum permissible radial clearance S_{max} is shown in Table 107, as a function of the operating pressure and functional diameter.

IMPORTANT NOTE

The above data are maximum values and cannot be used at the same time, e.g. the maximum operating speed depends on material type, pressure, temperature and gap value. Temperature range also depends on media.

** In the case of unpressurized piston applications in temperatures below 0 °C please contact your local Trelleborg Sealing Solutions marketing company for more information!

INSTALLATION INSTRUCTIONS

AQ-Seal® 5 is installed according to information on page 264 to 266 and 268.

RECOMMENDED MATERIALS

The following material combinations have proven effective for hydraulic applications:

Turcon® AQ-Seal® 5 in Turcon® M12
All round material for light to heavy hydraulic applications with linear movements in mineral oils, flame retardant hydraulic fluids, bio-oils and phosphate ester:

O-Ring and Quad-Ring®:	NBR 70 Shore A	N
	FKM 70 Shore A	V
Set code:	M12N or M12V	

Turcon® AQ-Seal® 5 in Turcon® T46
For medium to heavy applications with linear movements in mineral oils and other media with good lubrication:

O-Ring and Quad-Ring®:	NBR 70 Shore A	N
	FKM 70 Shore A	V
Set code:	T46N or T46V	

For specific applications, all Turcon® materials are available.

Other material combinations are listed in Table 106.

Table 106: Turcon® Materials for AQ-Seal® 5

Material, Applications, Properties	Code	O-Ring Material Shore A***	Code	O-Ring and Quad-Ring® Operating Temp.* °C	Mating Surface Material	MPa max Dyna-mic
Turcon® M12 First material choice for seals in linear motion Overall improved properties For new constructions and updating For all commonly applied hydraulic fluids including fluids with low lubrication performance Lowest friction and best sliding properties Lowest wear on seals Improved absorption of abrasive contaminants Low wear or abrasion of counter surface BAM tested Mineral fiber and Additives filled Color: Dark gray	M12	NBR 70	N	-30 to +100	Steel Steel hardened Cast iron Stainless steel Titanium	50
		NBR 70 Low temp.	T	-45 to +80		
		FKM 70	V	-10 to +200		
Turcon® T08 For lubricating fluids and linear motion Very high compressive strength and extrusion resistance Hard counter surfaces is recommended Bronze filled Color: Light to dark brown, which may have variations in shading	T08	NBR 70	N	-30 to +100	Steel hardened Cast iron	60
		NBR 70 Low temp.	T	-45 to +80		
		FKM 70	V	-10 to +200		
Turcon® T10 For hydraulic and pneumatic For linear motion in lubricating and non-lubricating fluids High extrusion resistance Good chemical resistance Not for electrically conducting fluids BAM tested Carbon, graphite filled Color: Black	T10	NBR 70	N	-30 to +100	Steel Stainless steel	40
		NBR 70 Low temp.	T	-45 to +80		
		FKM 70	V	-10 to +200		
		EPDM 70	E**	-45 to +145		
Turcon® T29 For lubricating and non-lubricating fluids Good extrusion resistance Surface texture is not suitable for gas sealing Not for electrically conducting fluids Carbon fiber filled Color: Gray	T29	NBR 70	N	-30 to +100	Steel Cast iron Stainless steel	30
		NBR 70 Low temp.	T	-45 to +80		
		FKM 70	V	-10 to +200		
		EPDM 70	E**	-45 to +145		

Table continues on next page

Material, Applications, Properties	Code	O-Ring Material Shore A***	Code	O-Ring and Quad-Ring® Operating Temp.* °C	Mating Surface Material	MPa max Dyna-mic
Turcon® T40 For lubricating and non-lubricating fluids High frequency and short strokes Water hydraulics Surface texture is not suitable for gas sealing Carbon fiber filled Color: Gray	T40	NBR 70	N	-30 to +100	Steel Cast iron Stainless steel Aluminum	25
		NBR 70 Low temp.	T	-45 to +80		
		FKM 70	V	-10 to +200		
		EPDM 70	E**	-45 to +145		
Turcon® T46 For lubricated hydraulics in linear motion High compressive strength High extrusion resistance Very good sliding and wear properties BAM tested Bronze filled Color: Light to dark brown, which may have variations in shading	T46	NBR 70	N	-30 to +100	Steel hardened Cast iron	50
		NBR 70 Low temp.	T	-45 to +80		
		FKM 70	V	-10 to +200		
Zurcon® Z80 For lubricating and non-lubricating fluids Water based fluids, air and gases Dry air pneumatics High abrasion and extrusion resistance For service in abrasive conditions and media with particles Good chemical resistance Limited temperature capability (-60 to +80 °C) UHMWPE (Ultra High Molecular Weight Polyethylene) Color: White to off-white	Z80	NBR 70	N	-30 to (+100)	Steel Steel hardened Stainless steel Aluminum Ceramic coating	35
		NBR 70 Low temp.	T	-45 to +80		
		EDPM 70	E**	-10 to (+145)		

* The O-Ring and Quad-Ring® Operation Temperature is only valid in mineral hydraulic oil (except EPDM).

** Material not suitable for mineral oils.

*** Quad-Ring® material NBR 70 code: N7004
FKM70 code: V7002

BAM: Tested by "Bundesanstalt Materialprufung, Germany".

Highlighted materials are recommended.

Installation Recommendation

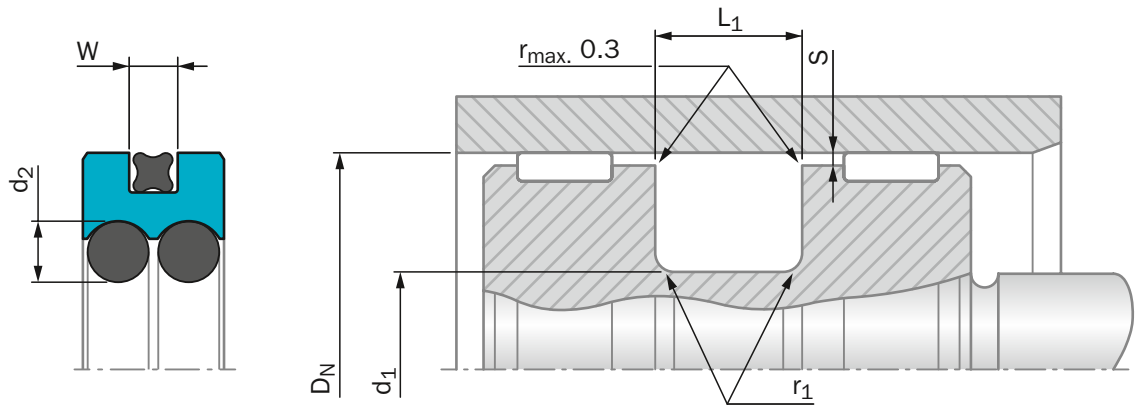

Figure 122: Installation Drawing

Table 107: Installation Dimensions

Series No.	Bore Diameter D_N H9		Groove Diameter	Groove Width	Radius	Radial Clearance S_{max}*			O-Ring Cross Section	Quad-Ring® Cross Section
	Standard Application	Available Range	d_1 h9	L_1 +0.2	$r_{1\ max}$	10 MPa	20 MPa	30 MPa	d_2	W
PQ010	40 - 79.9	25 - 250	D_N - 10.0	6.3	0.6	0.30	0.20	0.15	2.62	1.78
PQ020	80 - 132.9	50 - 450	D_N - 13.0	8.3	1.0	0.40	0.30	0.15	3.53	2.62
PQ030	133 - 462.9	100 - 650	D_N - 18.0	12.3	1.3	0.40	0.30	0.20	5.33	3.53
PQ040	463 - 700.0	425 - 700	D_N - 31.0	16.3	1.8	0.50	0.40	0.30	7.00	5.33

* At pressures **> 30 MPa** use diameter tolerance H8/f8 (bore/piston) in the area of the seal use Turcon® AQ-Seal® 5 CR or consult your local Trelleborg Sealing Solutions marketing company for alternative material or profiles.

Slydring® / Wear Rings are not applicable at very small radial clearances please consult the Slydring® catalog.

ORDERING EXAMPLE

Turcon® AQ-Seal® 5 complete with Quad-Ring® and O-Rings, standard application:

Series:	PQ020 from Table 107
Bore Diameter:	D_N = 80.0 mm
TSS Part No.:	PQ0200800 from Table 108

Select the material from Table 106. The corresponding code numbers are appended to the TSS Part No. Together they form the TSS Article Number. The TSS Article Number for all intermediate sizes can be determined by following the example:

TSS Article No. PQ02 0 0800 - M12 N

- TSS Series No. — PQ02
- Type (Standard) — 0
- Bore Diameter x 10 — 0800
- Quality Index (Standard) — -
- Material Code (Seal Ring) — M12
- Material Code (O-Ring)/(Quad-Ring® Seal) — N

Table 108: Installation Dimensions / TSS Part No.

Bore	Groove Dia.	Groove Width	Part No.	O-Ring Size	Quad-Ring® Size
D_N H9	d_1 h9	L_1 +0.2			
40.0	**30.0**	**6.3**	**PQ0100400**	**29.82 x 2.62**	**34.65 x 1.78**
42.0	32.0	6.3	PQ0100420	31.42 x 2.62	37.82 x 1.78
45.0	35.0	6.3	PQ0100450	34.59 x 2.62	37.82 x 1.78
48.0	38.0	6.3	PQ0100480	37.77 x 2.62	41.00 x 1.78
50.0	**40.0**	**6.3**	**PQ0100500**	**39.34 x 2.62**	**44.17 x 1.78**
52.0	42.0	6.3	PQ0100520	40.94 x 2.62	47.35 x 1.78
55.0	45.0	6.3	PQ0100550	44.12 x 2.62	50.52 x 1.78
60.0	50.0	6.3	PQ0100600	48.90 x 2.62	53.70 x 1.78
63.0	**53.0**	**6.3**	**PQ0100630**	**52.07 x 2.62**	**56.87 x 1.78**
65.0	55.0	6.3	PQ0100650	53.64 x 2.62	60.05 x 1.78
70.0	60.0	6.3	PQ0100700	58.42 x 2.62	63.22 x 1.78
75.0	65.0	6.3	PQ0100750	63.17 x 2.62	69.57 x 1.78
80.0	**67.0**	**8.3**	**PQ0200800**	**66.27 x 3.53**	**71.12 x 2.62**
85.0	72.0	8.3	PQ0200850	69.44 x 3.53	75.87 x 2.62
90.0	77.0	8.3	PQ0200900	75.79 x 3.53	82.22 x 2.62
95.0	82.0	8.3	PQ0200950	78.97 x 3.53	82.22 x 2.62
100.0	**87.0**	**8.3**	**PQ0201000**	**85.32 x 3.53**	**88.57 x 2.62**
105.0	92.0	8.3	PQ0201050	91.67 x 3.53	94.92 x 2.62
110.0	97.0	8.3	PQ0201100	94.84 x 3.53	101.27 x 2.62
115.0	102.0	8.3	PQ0201150	101.19 x 3.53	107.62 x 2.62
120.0	107.0	8.3	PQ0201200	104.37 x 3.53	107.62 x 2.62
125.0	**112.0**	**8.3**	**PQ0201250**	**110.72 x 3.53**	**113.97 x 2.62**
130.0	117.0	8.3	PQ0201300	113.89 x 3.53	120.32 x 2.62
135.0	117.0	12.3	PQ0301350	113.67 x 5.33	123.42 x 3.53
140.0	122.0	12.3	PQ0301400	120.02 x 5.33	126.59 x 3.53
150.0	132.0	12.3	PQ0301500	129.54 x 5.33	136.12 x 3.53
160.0	**142.0**	**12.3**	**PQ0301600**	**139.07 x 5.33**	**145.64 x 3.53**
170.0	152.0	12.3	PQ0301700	148.49 x 5.33	158.34 x 3.53
180.0	162.0	12.3	PQ0301800	158.12 x 5.33	164.69 x 3.53
190.0	172.0	12.3	PQ0301900	170.82 x 5.33	177.39 x 3.53
200.0	**182.0**	**12.3**	**PQ0302000**	**177.17 x 5.33**	**183.74 x 3.53**
210.0	192.0	12.3	PQ0302100	189.87 x 5.33	196.44 x 3.53
220.0	202.0	12.3	PQ0302200	196.22 x 5.33	202.79 x 3.53
230.0	212.0	12.3	PQ0302300	208.92 x 5.33	215.49 x 3.53
240.0	222.0	12.3	PQ0302400	221.62 x 5.33	221.84 x 3.53
250.0	**232.0**	**12.3**	**PQ0302500**	**227.97 x 5.33**	**234.54 x 3.53**
280.0	262.0	12.3	PQ0302800	253.37 x 5.33	266.29 x 3.53
300.0	282.0	12.3	PQ0303000	278.77 x 5.33	278.99 x 3.53
320.0	**302.0**	**12.3**	**PQ0303200**	**291.47 x 5.33**	**304.39 x 3.53**
350.0	332.0	12.3	PQ0303500	329.57 x 5.33	329.79 x 3.53

Bore	Groove Dia.	Groove Width	Part No.	O-Ring Size	Quad-Ring® Size
D_N H9	d_1 h9	L_1 +0.2			
400.0	**382.0**	**12.3**	**PQ0304000**	**380.37 x 5.33**	**380.59 x 3.53**
420.0	402.0	12.3	PQ0304200	405.26 x 5.33	380.59 x 3.53
450.0	432.0	12.3	PQ0304500	430.66 x 5.33	430.66 x 3.53
480.0	449.0	16.3	PQ0404800	443.36 x 7.00	456.06 x 5.33
500.0	**469.0**	**16.3**	**PQ0405000**	**468.76 x 7.00**	**456.06 x 5.33**
600.0	569.0	16.3	PQ0406000	557.66 x 7.00	557.58 x 5.33
700.0	669.0	16.3	PQ0407000	658.88 x 7.00	658.88 x 5.33

Bore diameters in **bold** type comply with the recommendations of ISO 3320.
All intermediate sizes up to 700 mm diameter can be supplied. Sizes > 700 mm diameter with special elastomers on request,
see Turcon® AQ-Seal® with Bean Seal page 436

Turcon® AQ-Seal®

Double-acting

Rubber-energized plastic-faced seal

Material:
Turcon®, Zurcon® and Elastomer

Turcon® AQ-Seal®

Description

Turcon® AQ-Seal® is a double-acting seal consisting of a seal ring of Turcon® material, an Quad-Ring® seal and an O-Ring as energizing element.

The Turcon® seal ring and the Quad-Ring® Seal together create the dynamic sealing function while the O-Ring performs the static sealing function.

AQ-Seal® is supplied as standard with radial notches on both sides which ensure direct pressurizing of the seal under all operating conditions.

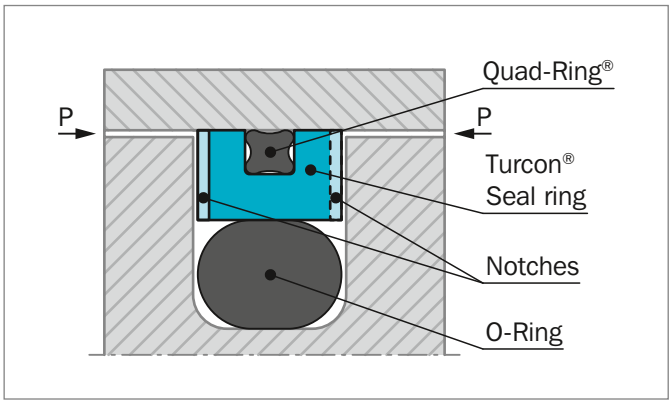

Figure 123: Turcon® AQ-Seal®

AQ-Seal® combines the benefits of a low-friction Turcon® slipper seal with the high sealing characteristics of an elastomeric seal by incorporating a limited foot print Quad-Ring® in the dynamic sealing face. This optimizes leakage control while minimizing friction.

ADVANTAGES

- High sealing effect in applications requiring media separation, e.g. fluid/fluid or fluid/gas
- Double security through the combination of low-friction special materials with elastomer seals
- Simple groove design, small installation space, interchangeable with Turcon® Glyd Ring® and Turcon® Glyd Ring® T installation according to ISO 7425-1
- Outstanding sliding properties, no stick-slip effect
- Diameter from 15 to 700 mm (for sizes above use Turcon® AQ-Seal® with Bean Seal, see page 436)

APPLICATION EXAMPLES

AQ-Seal® is the recommended sealing element for double acting pistons of positioning and holding cylinders for:

- Mobile hydraulics
- Machine tools
- Presses
- Semi-static piston accumulators
- Active stabilizers
- Hydro-pneumatic suspensions for heavy vehicles
- Subsea connectors
- Offshore valves
- Wind Power
- Pressure intensifiers
- Jacks
- Lifts
- Hydraulic vices

OPERATING CONDITIONS

Pressure:	Up to 50 MPa with mineral oil Up to 30 MPa for media with reduced lubricating properties
Speed:	Up to 2 m/s with reciprocating movements
Temperature:	-45 °C to +200 °C * depending on O-Ring and Quad-Ring® seal material
Media:	Mineral oil-based hydraulic fluids, flame retardant hydraulic fluids, environmentally friendly hydraulic fluids (bio-oils), phosphate ester, water and others, depending on temperature, seal, O-Ring and Quad-Ring® seal material compatibility see Table 109
Clearance:	The maximum permissible radial clearance S_{max} is shown in Table 110, as a function of the operating pressure and functional diameter.

IMPORTANT NOTE

The above data are maximum values and cannot be used at the same time, e.g. the maximum operating speed depends on material type, pressure, temperature and gap value. Temperature range also depends on media.

* In the case of unpressurized applications in temperatures below 0 °C please contact your local Trelleborg Sealing Solutions marketing company for more information!

INSTALLATION INSTRUCTIONS

AQ-Seal® is installed according to information on page 264 to 266 and 268.

Closed groove installation applies same dimensions as for Turcon® Glyd Ring® in Table 86 page 262.

RECOMMENDED MATERIALS

The following material combinations have proven effective for hydraulic applications:

Turcon® AQ-Seal® in Turcon® M12
All round material for light to heavy hydraulic applications with linear, movements in mineral oils, flame retardant hydraulic fluids, phosphate ester, bio-oils or fluids having low lubricating properties:

O-Ring and Quad-Ring®:	NBR 70 Shore A	N
	FKM 70 Shore A	V
Set code:	M12N or M12V	

Turcon® AQ-Seal® in Turcon® T46
For medium to heavy applications with linear movements in mineral oils and other media with good lubrication:

O-Ring and Quad-Ring®:	NBR 70 Shore A	N
	FKM 70 Shore A	V
Set code:	T46N or T46V	

For specific applications, all Turcon® materials are available.

Other material combinations are listed in Table 109.

Table 109: Turcon® Material for AQ-Seal®

Material, Applications, Properties	Code	O-Ring Material Shore A***	Code	O-Ring and Quad-Ring® Operating Temp.* °C	Mating Surface Material	MPa max Dyna-mic
Turcon® M12 First material choice for seals in linear motion Overall improved properties For new constructions and updating For all commonly applied hydraulic fluids Low wear or abrasion of counter surface including fluids with low lubrication performance Lowest friction and best sliding properties Lowest wear on seals Improved absorption of abrasive contaminants Low wear or abrasion of counter surface BAM tested Mineral fiber and Additives filled Color: Dark gray	M12	NBR 70	N	-30 to +100	Steel Steel hardened Cast iron Stainless steel Titanium	40
		NBR 70 Low temp.	T	-45 to +80		
		FKM 70	V	-10 to +200		
Turcon® T08 For lubricating fluids and linear motion Very high compressive strength and extrusion resistance Hard counter surfaces is recommended Bronze filled Color: Light to dark brown, which may have variations in shading	T08	NBR 70	N	-30 to +100	Steel hardened Cast iron	50
		NBR 70 Low temp.	T	-45 to +80		
		FKM 70	V	-10 to +200		
Turcon® T10 For hydraulic and pneumatic For linear motion in lubricating and non-lubricating fluids High extrusion resistance Good chemical resistance Not for electrically conducting fluids BAM tested Carbon, graphite filled Color: Black	T10	NBR 70	N	-30 to +100	Steel Stainless steel	30
		NBR 70 Low temp.	T	-45 to +80		
		FKM 70	V	-10 to +200		
		EPDM 70	E**	-45 to +145		
Turcon® T29 For lubricating and non-lubricating fluids Good extrusion resistance Surface texture is not suitable for gas sealing Not for electrically conducting fluids Carbon fiber filled Color: Gray	T29	NBR 70	N	-30 to +100	Steel Cast iron Stainless steel	30
		NBR 70 Low temp.	T	-45 to +80		
		FKM 70	V	-10 to +200		
		EPDM 70	E**	-45 to +145		

Table continues on next page

Material, Applications, Properties	Code	O-Ring Material Shore A***	Code	O-Ring and Quad-Ring® Operating Temp.* °C	Mating Surface Material	MPa max Dyna-mic
Turcon® T40 For lubricating and non-lubricating fluids High frequency and short strokes Water hydraulics Surface texture is not suitable for gas sealing Carbon fiber filled Color: Gray	T40	NBR 70	N	-30 to +100	Steel Cast iron Stainless steel Aluminum	25
		NBR 70 Low temp.	T	-45 to +80		
		FKM 70	V	-10 to +200		
		EPDM 70	E**	-45 to +145		
Turcon® T46 For lubricated hydraulics in linear motion High compressive strength High extrusion resistance Very good sliding and wear properties Bronze filled BAM tested Color: Light to dark brown, which may have variations in shading	T46	NBR 70	N	-30 to +100	Steel hardened Cast iron	40
		NBR 70 Low temp.	T	-45 to +80		
		FKM 70	V	-10 to +200		
Zurcon® Z80 For lubricating and non-lubricating fluids Water based fluids, air and gases Dry air pneumatics High abrasion and extrusion resistance For service in abrasive conditions and media with particles Good chemical resistance Limited temperature capability (-60 to +80 °C) UHMWPE (Ultra High Molecular Weight Polyethylene) Color: White to off-white	Z80	NBR 70	N	-30 to (+100)	Steel Steel hardened Stainless steel Aluminum Ceramic coating	30
		NBR 70 Low temp.	T	-45 to +80		
		EDPM 70	E**	-45 to (+145)		

* The O-Ring and Quad-Ring® Operation Temperature is only valid in mineral hydraulic oil (except EPDM).

** Material not suitable for mineral oils.

*** Quad-Ring® material NBR 70 code: N7004
FKM70 code: V7002

BAM: Tested by "Bundesanstalt Materialprufung, Germany".

Highlighted materials are recommended.

Installation Recommendation

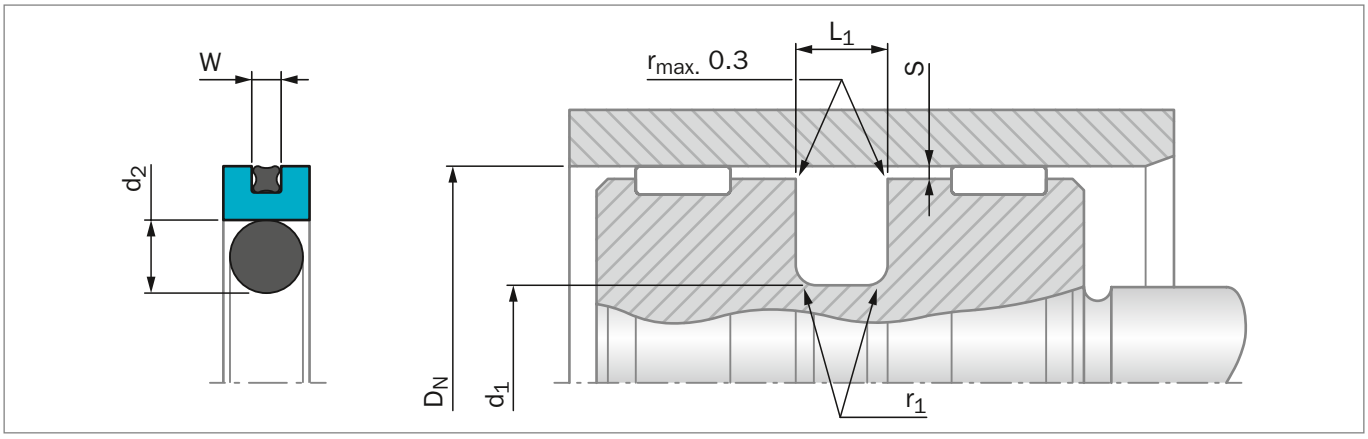

Figure 124: Installation Drawing

Table 110: Installation Dimensions

Bore Diameter D_N H9				Groove Diameter	Groove Width	Radius	Radial Clearance S_{max}*			O-Ring Cross Section	Quad-Ring® Cross Section
Standard Application		Light Application		d_1 h9	L_1 +0.2	$r_{1\,max}$	10 MPa	20 MPa	40 MPa	d_2	W
Series No.	Diameter Range	Series No.	Diameter Range								
PQ12	15 - 39.9	PQ14	40 - 79.9	D_N - 11.0	4.2	1.0	0.25	0.15	0.10	3.53	1.78
PQ12	40 - 79.9	PQ14	80 - 132.9	D_N - 15.5	6.3	1.3	0.30	0.20	0.15	5.33	1.78
PQ22	80 - 132.9	PQ24	133 - 252.9	D_N - 21.0	8.1	1.8	0.30	0.20	0.15	7.00	2.62
PQ22	133 - 252.9	–	–	D_N - 24.5	8.1	1.8	0.30	0.20	0.15	7.00	2.62
PQ32	253 - 462.9	–	–	D_N - 28.0	9.5	2.5	0.45	0.30	0.25	8.40	3.53
PQ52	463 - 700.0	–	–	D_N - 35.0	11.5	3.0	0.55	0.40	0.35	10.00	5.33

* At pressures > **40 MPa** use diameter tolerance H8/f8 (bore/rod) in the area of the seal use Turcon® AQ-Seal® 5 CR or consult your local Trelleborg Sealing Solutions marketing company for alternative material or profiles.
Slydring® / Wear Rings are not applicable at very small radial clearances please consult the Slydring® catalog.

ORDERING EXAMPLE

AQ-Seal® complete with Quad-Ring® and O-Ring standard application:

Series:	PQ22 from Table 110.
Bore Diameter:	D_N = 80.0 mm
TSS Part No.	PQ2200800 from Table 111

Select the material from Table 109. The corresponding code numbers are appended to the TSS Part No. Together they form the TSS Article Number. The TSS Article Number for all intermediate sizes can be determined by following the example:

TSS Article No. PQ22 0 0800 - M12 N

- TSS Series No. — PQ22
- Type (Standard) — 0
- Bore Diameter x 10 — 0800
- Quality Index (Standard) — -
- Material Code (Seal Ring) — M12
- Material Code (O-Ring)/(Quad-Ring®) — N

Table 111: Installation Dimensions / TSS Part No.

Bore	Groove Dia.	Groove Width	Part No.	O-Ring Size	Quad-Ring® Size
D_N H9	d_1 h9	L_1 +0.2			
16.0	5.0	4.2	PQ1200160	4.34 x 3.53	12.42 x 1.78
18.0	7.0	4.2	PQ1200180	6.40 x 3.53	14.00 x 1.78
20.0	9.0	4.2	PQ1200200	8.40 x 3.53	15.60 x 1.78
22.0	11.0	4.2	PQ1200220	10.69 x 3.53	17.17 x 1.78
25.0	**14.0**	**4.2**	**PQ1200250**	**13.87 x 3.53**	**20.35 x 1.78**
28.0	17.0	4.2	PQ1200280	15.47 x 3.53	23.52 x 1.78
30.0	19.0	4.2	PQ1200300	18.66 x 3.53	25.12 x 1.78
32.0	**21.0**	**4.2**	**PQ1200320**	**20.22 x 3.53**	**26.70 x 1.78**
35.0	24.0	4.2	PQ1200350	23.40 x 3.53	29.87 x 1.78
40.0	**29.0**	**4.2**	**PQ1400400**	**28.17 x 3.53**	**34.65 x 1.78**
42.0	31.0	4.2	PQ1400420	29.75 x 3.53	37.82 x 1.78
45.0	34.0	4.2	PQ1400450	32.92 x 3.53	37.82 x 1.78
48.0	37.0	4.2	PQ1400480	36.09 x 3.53	41.00 x 1.78
50.0	**39.0**	**4.2**	**PQ1400500**	**37.69 x 3.53**	**44.17 x 1.78**
50.0	**34.5**	**6.3**	**PQ1200500**	**32.69 x 5.33**	**44.17 x 1.78**
52.0	41.0	4.2	PQ1400520	40.87 x 3.53	47.35 x 1.78
55.0	44.0	4.2	PQ1400550	44.04 x 3.53	50.52 x 1.78
60.0	49.0	4.2	PQ1400600	47.22 x 3.53	53.70 x 1.78
63.0	**52.0**	**4.2**	**PQ1400630**	**50.39 x 3.53**	**56.87 x 1.78**
63.0	**47.5**	**6.3**	**PQ1200630**	**46.99 x 5.33**	**56.87 x 1.78**
65.0	54.0	4.2	PQ1400650	53.57 x 3.53	60.05 x 1.78
70.0	59.0	4.2	PQ1400700	56.74 x 3.53	63.22 x 1.78
70.0	54.5	6.3	PQ1200700	53.34 x 5.33	63.22 x 1.78
75.0	64.0	4.2	PQ1400750	63.09 x 3.53	69.57 x 1.78
80.0	**64.5**	**6.3**	**PQ1400800**	**62.87 x 5.33**	**72.75 x 1.78**
80.0	59.0	8.1	PQ2200800	58.00 x 7.00	71.12 x 2.62
85.0	69.5	6.3	PQ1400850	69.22 x 5.33	75.92 x 1.78
85.0	64.0	8.1	PQ2200850	63.00 x 7.00	75.87 x 2.62
90.0	74.5	6.3	PQ1400900	72.39 x 5.33	82.27 x 1.78
90.0	69.0	8.1	PQ2200900	68.00 x 7.00	82.22 x 2.62
95.0	79.5	6.3	PQ1400950	78.74 x 5.33	88.62 x 1.78
95.0	74.0	8.1	PQ2200950	73.00 x 7.00	82.22 x 2.62
100.0	**84.5**	**6.3**	**PQ1401000**	**81.92 x 5.33**	**88.62 x 1.78**
100.0	79.0	8.1	PQ2201000	78.00 x 7.00	88.57 x 2.62
105.0	89.5	6.3	PQ1401050	88.27 x 5.33	94.97 x 1.78
105.0	84.0	8.1	PQ2201050	83.00 x 7.00	94.92 x 2.62
110.0	94.5	6.3	PQ1401100	91.44 x 5.33	101.32 x 1.78
110.0	89.0	8.1	PQ2201100	88.00 x 7.00	101.27 x 2.62
115.0	99.5	6.3	PQ1401150	97.79 x 5.33	107.67 x 1.78
115.0	94.0	8.1	PQ2201150	93.00 x 7.00	107.62 x 2.62

Bore	Groove Dia.	Groove Width	Part No.	O-Ring Size	Quad-Ring® Size
D_N H9	d_1 h9	L_1 +0.2			
120.0	104.5	6.3	PQ1401200	100.97 x 5.33	114.02 x 1.78
120.0	99.0	8.1	PQ2201200	98.00 x 7.00	107.62 x 2.62
125.0	**109.5**	**6.3**	**PQ1401250**	**107.32 x 5.33**	**114.02 x 1.78**
125.0	**104.0**	**8.1**	**PQ2201250**	**103.00 x 7.00**	**113.97 x 2.62**
130.0	114.5	6.3	PQ1401300	113.67 x 5.33	120.37 x 1.78
130.0	109.0	8.1	PQ2201300	108.00 x 7.00	120.32 x 2.62
135.0	114.0	8.1	PQ2401350	113.67 x 7.00	126.67 x 2.62
140.0	119.0	8.1	PQ2401400	116.84 x 7.00	126.67 x 2.62
150.0	129.0	8.1	PQ2401500	126.37 x 7.00	139.37 x 2.62
160.0	**139.0**	**8.1**	**PQ2401600**	**135.89 x 7.00**	**145.72 x 2.62**
170.0	149.0	8.1	PQ2401700	145.42 x 7.00	158.42 x 2.62
180.0	159.0	8.1	PQ2401800	158.12 x 7.00	171.12 x 2.62
190.0	169.0	8.1	PQ2401900	164.47 x 7.00	177.47 x 2.62
200.0	**179.0**	**8.1**	**PQ2402000**	**177.17 x 7.00**	**190.17 x 2.62**
210.0	189.0	8.1	PQ2402100	183.52 x 7.00	196.52 x 2.62
220.0	199.0	8.1	PQ2402200	196.22 x 7.00	202.87 x 2.62
230.0	209.0	8.1	PQ2402300	202.57 x 7.00	215.57 x 2.62
240.0	219.0	8.1	PQ2402400	215.27 x 7.00	221.92 x 2.62
250.0	225.5	8.1	PQ2202500	227.97 x 7.00	234.62 x 2.62
250.0	**229.0**	**8.1**	**PQ2402500**	**227.97 x 7.00**	**234.62 x 2.62**
280.0	252.0	9.5	PQ3202800	250.00 x 8.40	266.29 x 3.53
300.0	272.0	9.5	PQ3203000	270.00 x 8.40	278.99 x 3.53
310.0	282.0	9.5	PQ3203100	280.00 x 8.40	291.69 x 3.53
320.0	292.0	9.5	PQ3203200	304.00 x 8.40	304.39 x 3.53
350.0	322.0	9.5	PQ3203500	330.00 x 8.40	329.79 x 3.53
400.0	372.0	9.5	PQ3204000	370.00 x 8.40	380.59 x 3.53
420.0	392.0	9.5	PQ3204200	390.00 x 8.40	380.59 x 3.53
450.0	422.0	9.5	PQ3204500	420.00 x 8.40	430.66 x 3.53
480.0	445.0	11.5	PQ5204800	444.00 x 8.40	456.06 x 5.33
500.0	465.0	11.5	PQ5205000	464.00 x 8.40	456.06 x 5.33
600.0	565.0	11.5	PQ5206000	564.00 x 8.40	557.58 x 5.33
700.0	665.0	11.5	PQ5207000	664.00 x 8.40	658.88 x 5.33

The dimensions in **bold** type are suitable for grooves to ISO 7425/1. Bore diameter in accordance with ISO 3320.
All intermediate sizes up to 700 mm diameter can be supplied. Sizes > 700 mm diameter with special elastomers on request, see Turcon® AQ-Seal® with Bean Seal page 436

Turcon® Stepseal® 2K

Single-acting

Rubber-energized plastic-faced seal

Material:
Turcon®, Zurcon® and Elastomer

Turcon® Stepseal® 2K*

Description

Stepseal® 2K is a single-acting seal element consisting of a seal ring of high-grade Turcon® or Zurcon® materials and an O-Ring as energizing element.

Stepseal® 2K was originally developed and patented by Trelleborg Sealing Solutions as a rod seal. Due to its outstanding properties it is well suited as a single-acting piston seal where high demands are made on positional accuracy and free movement.

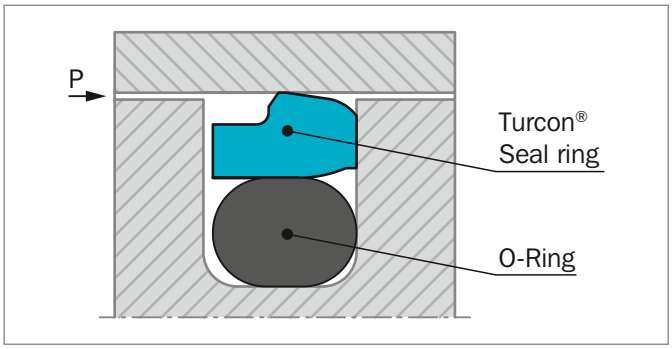

Figure 125: Turcon® Stepseal® 2K

ADVANTAGES

- High static and dynamic sealing effect
- Low friction, high efficiency
- Stick-slip free operation
- High extrusion resistance allowing large hardware clearances
- High abrasion resistance
- Long service life
- Simple groove design, one-piece piston possible
- Wide range of application temperatures and high resistance to chemicals, depending on the choice of O-Ring material
- Simple installation without seal edge deformation
- Available for all diameters up to 2700 mm

* Patented geometry

APPLICATION EXAMPLES

Turcon® Stepseal® 2K is the recommended sealing element for single acting pistons in hydraulic components for:

- Mobile hydraulics
- Construction Equipment
- Injection molding machines
- Machine tools
- Presses
- Cranes
- Servo hydraulics
- Automotive industry

OPERATING CONDITIONS

Pressure:	Up to 60 MPa
Speed:	Up to 15 m/s, with reciprocating movements, frequency up to 5 Hz
Temperature:	-45 °C to +200 °C **
Media:	Mineral oil-based hydraulic fluids, flame retardant hydraulic fluids, environmentally friendly hydraulic fluids (bio-oils), phosphate ester, water and others, depending on the seal and O-Ring material compatibility see Table 113
Clearance:	The maximum permissible radial clearance S_{max} is shown in Table 114, as a function of the operating pressure and functional diameter.

IMPORTANT NOTE

The above data are maximum values and cannot be used at the same time, e.g. the maximum operating speed depends on material type, pressure, temperature and gap value. Temperature range also depends on media.

** In the case of unpressurized piston applications in temperatures below 0 °C please contact your local Trelleborg Sealing Solutions marketing company for more information!

SERIES

Different cross section sizes are recommended as a function of the seal diameters.

Table 112 shows the relationship between the series number according to the seal diameter range and the different application class sizes. These application classes are:

Standard application:	General applications without no exceptional operating conditions.
Light application:	Applications with demands for reduced friction or for smaller grooves.
Heavy-duty application:	For exceptional operating loads such as high pressures, pressure peaks, etc.

Table 112: Available Range

Series No.	Bore Diameter D_N H9
PSK00	6.0 - 140.0
PSK10	10.0 - 140.0
PSK20	12.0 - 320.0
PSK30	18.0 - 480.0
PSK40	50.0 - 700.0
PSK80	133.0 - 999.9
PSK50	250.0 - 999.9
PSK5X	1000.0 - 1200.0
PSK60	670.0 - 999.9
PSK6X	1000.0 - 2700.0

For the recommended Standard Application range see Table 114.

ISO GROOVE

Stepseal® 2K is installed in Trelleborg Sealing Solutions standard Stepseal® grooves or according to ISO 7425-1 seal housing.

INSTALLATION INSTRUCTIONS

Stepseal® 2K is installed according to information on page 264 to 266.

Closed groove installation according to dimensions in Table 86 page 262.

RECOMMENDED MATERIALS

The following material combinations have proven effective for hydraulic applications:

Turcon® Stepseal® 2K in Turcon® M12
All round material for light to heavy hydraulic applications with linear, short stroke or helical movements in mineral oils, flame retardant hydraulic fluids, phosphate ester, bio-oils or fluids having low lubricating properties:

O-Ring:	NBR 70 Shore A	N
	FKM 70 Shore A	V
Set code:	M12N or M12V	

Turcon® Stepseal® 2K in Turcon® T46
For medium to heavy applications with linear movements in mineral oils and other media with good lubrication:

O-Ring:	NBR 70 Shore A	N
	FKM 70 Shore A	V
Set code:	T46N or T46V	

For specific applications, all Turcon® materials are available.

Other material combinations are listed in Table 113.

Table continues on next page

Table 113: Turcon® and Zurcon® Materials for Stepseal® 2K

Material, Applications, Properties	Code	O-Ring Material Shore A	Code	O-Ring Operating Temp.* °C	Mating Surface Material	MPa max. Dynamic
Turcon® M12 First material choice for seals in linear motion Overall improved properties For new constructions and updating For all commonly applied hydraulic fluids including fluids with low lubrication performance Lowest friction and best sliding properties Lowest wear on seals Improved absorption of abrasive contaminants Low wear or abrasion of counter surface BAM tested Mineral fiber and Additives filled Color: Dark gray	M12	NBR 70	N	-30 to +100	Steel Steel hardened Cast iron Stainless steel Titanium	50
		NBR 70 Low temp.	T	-45 to +80		
		FKM 70	V	-10 to +200		
Turcon® T05 For lubricating fluids Also for gas service Very low friction Very good sliding and sealing properties Color: Turquoise	T05	NBR 70	N	-30 to +100	Steel Steel hardened	20
		NBR 70 Low temp.	T	-45 to +80		
		FKM 70	V	-10 to +200		
Turcon® T08 For lubricating fluids and linear motion Very high compressive strength and extrusion resistance Hard counter surfaces is recommended Bronze filled Color: Light to dark brown, which may have variations in shading	T08	NBR 70	N	-30 to +100	Steel hardened Cast iron	60
		NBR 70 Low temp.	T	-45 to +80		
		FKM 70	V	-10 to +200		
Turcon® T10 For hydraulic and pneumatic For lubricating and non-lubricating fluids High extrusion resistance Good chemical resistance Not for electrically conducting fluids BAM tested Carbon, graphite filled Color: Black	T10	NBR 70	N	-30 to +100	Steel Steel hardened Stainless steel	40
		NBR 70 Low temp.	T	-45 to +80		
		FKM 70	V	-10 to +200		
		EPDM 70	E**	-45 to +145		
Turcon® T29 For lubricating and non-lubricating fluids Good extrusion resistance Surface texture is not suitable for gas sealing Not for electrically conducting fluids Carbon fiber filled Color: Gray	T29	NBR 70	N	-30 to +100	Steel Steel hardened Cast iron Stainless steel	30
		NBR 70 Low temp.	T	-45 to +80		
		FKM 70	V	-10 to +200		
		EPDM 70	E**	-45 to +145		

Material, Applications, Properties	Code	O-Ring Material Shore A	Code	O-Ring Operating Temp.* °C	Mating Surface Material	MPa max. Dyna-mic
Turcon® T40 For lubricating and non-lubricating fluids High frequency and short strokes Water hydraulics Surface texture is not suitable for gas sealing Carbon fiber filled Color: Gray	T40	NBR 70	N	-30 to +100	Steel hardened Cast iron Stainless steel Aluminum	25
		NBR 70 Low temp.	T	-45 to +80		
		FKM 70	V	-10 to +200		
		EPDM 70	E**	-45 to +145		
Turcon® T46 For lubricated hydraulics in linear motion High compressive strength High extrusion resistance Very good sliding and wear properties BAM tested Bronze filled Color: Light to dark brown, which may have variations in shading	T46	NBR 70	N	-30 to +100	Steel hardened Cast iron	50
		NBR 70 Low temp.	T	-45 to +80		
		FKM 70	V	-10 to +200		
Zurcon® Z51*** For mineral oil based fluids Very high abrasion and extrusion resistance For counter surface with rougher surface finish Limited chemical resistance Max. working temperature 110 °C Cast polyurethane Color: Yellow to light-brown	Z51	NBR 70	N	-30 to +100	Steel Steel hardened Cast iron Stainless steel Ceramic coating	60
		NBR 70 Low temp.	T	-45 to +80		
Zurcon® Z80 For lubricating and non-lubricating fluids Water based fluids, air and gases Dry air pneumatics High abrasion and extrusion resistance For service in abrasive conditions and media with particles Good chemical resistance Limited temperature capability (-60 to +80 °C) UHMWPE (Ultra High Molecular Weight Polyethylene) Color: White to off-white	Z80	NBR 70	N	-30 to (+100)	Steel Steel hardened Stainless steel Aluminum Ceramic coating	35
		NBR 70 Low temp.	T	-45 to +80		
		EPDM 70	E**	-45 to (+145)		

* The O-Ring Operation Temperature is only valid in mineral hydraulic oil (except EPDM).

** Material not suitable for mineral oils.

*** Max. diameter 2300 mm

BAM: Tested by "Bundesanstalt Materialprufung, Germany".

Highlighted materials are recommended.

Installation Recommendation

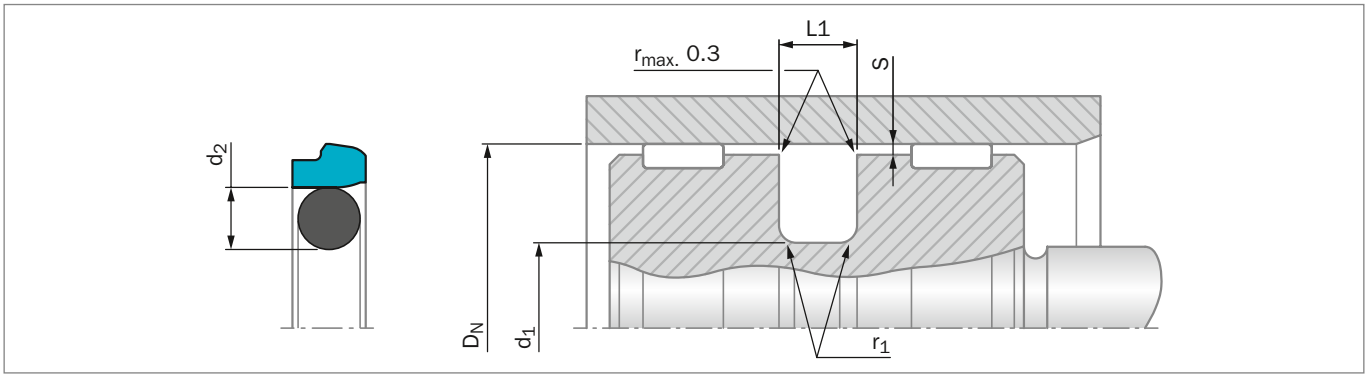

Figure 126: Installation Drawing

Table 114: Installation Dimensions - Standard Recommendations

Series No.	Bore Diameter D_N H9			Groove Diameter	Groove Width	Radius	Radial Clearance S_{max}*			O-Ring Cross Section
	Standard Application	Light Application	Heavy-Duty Application	d_1 h9	L_1 +0.2	$r_{1\ max}$	10 MPa	20 MPa	40 MPa	d_2
PSK0	8 - 16.9	17 - 26.9	-	D_N - 4.9	2.2	0.4	0.30	0.20	0.15	1.78
PSK1	17 - 26.9	27 - 59.9	-	D_N - 7.3	3.2	0.6	0.40	0.25	0.15	2.62
PSK2	27 - 59.9	60 - 199.9	17 - 24.9	D_N - 10.7	4.2	1.0	0.50	0.30	0.20	3.53
PSK3	60 - 199.9	200 - 255.9	25 - 59.9	D_N - 15.1	6.3	1.3	0.70	0.40	0.25	5.33
PSK4	200 - 255.9	256 - 669.9	60 - 199.9	D_N - 20.5	8.1	1.8	0.80	0.60	0.35	7.00
PSK8	256 - 669.9	670 - 999.9	200 - 255.9	D_N - 24.0	8.1	1.8	0.90	0.70	0.40	7.00
PSK5	670 - 999.9	-	256 - 669.9	D_N - 27.3	9.5	2.5	1.00	0.80	0.60	8.40
PSK5X	-	1000 - 1200	-	D_N - 27.3	9.5	2.5	1.00	0.80	0.60	8.40
PSK6**	-	-	670 - 999.9	D_N - 38.0	13.8	3.0	1.20	0.90	0.60	12.00
PSK6X**	1000 - 2700	-	-	D_N - 38.0	13.8	3.0	1.20	0.90	0.60	12.00

* At pressures > **40 MPa** use diameter tolerance H8/f8 (bore/piston) in the area behind seal or consult your local Trelleborg Sealing Solutions marketing company for alternative material or profiles.
Slydring® / Wear Rings are not applicable at very small radial clearances please consult the Slydring® catalog.
** O-Rings with 12 mm cross section are delivered as special profile ring

ORDERING EXAMPLE

Turcon® Stepseal® 2K complete with O-Ring, standard application:

Series:	PSK3 from Table 114
Bore Diameter:	D_N = 80.0 mm
TSS Part No.:	PSK300800 from Table 115

Select the material from Table 113. The corresponding code numbers are appended to the TSS Part No. Together these form the TSS Article Number. The TSS Article Number for all intermediate sizes can be determined by following the example:

TSS Article No. **PSK3 0 0800 - M12 N**

- TSS Series No. — PSK3
- Type (Standard) — 0
- Bore Diameter x 10*** — 0800
- Quality Index (Standard) — -
- Material Code (Seal Ring) — M12
- Material Code (O-Ring) — N

*** For diameters $D_N \geq 1000.0$ mm multiply only by factor 1.
Example: PSK6 for diameter D_N = 1200.0 mm
TSS Article No.: PSK6**X1200** - M12N

Table 115: Installation Dimensions / TSS Part No.

Bore Dia. D_N h9	Groove Dia. d_1 h9	Groove Width L_1 +0.2	TSS Part No.	O-Ring Dimensions
9.0	4.1	2.2	PSK000090	3.68 x 1.78
10.0	**5.1**	**2.2**	**PSK000100**	**4.47 x 1.78**
12.0	**7.1**	**2.2**	**PSK000120**	**6.70 x 1.80**
14.0	9.1	2.2	PSK000140	8.75 x 1.80
14.5	9.6	2.2	PSK000145	9.25 x 1.78
15.0	10.1	2.2	PSK000150	9.50 x 1.80
15.0	7.7	3.2	PSK100150	7.03 x 2.62
16.0	**11.1**	**2.2**	**PSK000160**	**10.60 x 1.80**
18.0	10.7	3.2	PSK100180	9.19 x 2.62
20.0	**15.1**	**2.2**	**PSK000200**	**14.00 x 1.78**
20.0	**12.7**	**3.2**	**PSK100200**	**12.37 x 2.62**
22.0	14.7	3.2	PSK100220	13.94 x 2.62
25.0	**17.7**	**3.2**	**PSK100250**	**17.12 x 2.62**
25.0	**14.3**	**4.2**	**PSK200250**	**13.87 x 3.53**
28.0	17.3	4.2	PSK200280	15.47 x 3.53
30.0	22.7	3.2	PSK100300	21.89 x 2.62
30.0	19.3	4.2	PSK200300	18.66 x 3.53
32.0	**24.7**	**3.2**	**PSK100320**	**23.47 x 2.62**
32.0	**21.3**	**4.2**	**PSK200320**	**20.22 x 3.53**
35.0	24.3	4.2	PSK200350	23.40 x 3.53
40.0	**32.7**	**3.2**	**PSK100400**	**31.42 x 2.62**
40.0	**29.3**	**4.2**	**PSK200400**	**28.17 x 3.53**
42.0	31.3	4.2	PSK200420	29.75 x 3.53
45.0	34.3	4.2	PSK200450	32.92 x 3.53
48.0	37.3	4.2	PSK200480	36.09 x 3.53
50.0	**39.3**	**4.2**	**PSK200500**	**37.69 x 3.53**
50.0	**34.9**	**6.3**	**PSK300500**	**32.69 x 5.33**
52.0	41.3	4.2	PSK200520	40.87 x 3.53
55.0	44.3	4.2	PSK200550	44.04 x 3.53
60.0	44.9	6.3	PSK300600	43.82 x 5.33
63.0	**52.3**	**4.2**	**PSK200630**	**50.39 x 3.53**
63.0	**47.9**	**6.3**	**PSK300630**	**46.99 x 5.33**
65.0	49.9	6.3	PSK300650	46.99 x 5.33
70.0	59.3	4.2	PSK200700	56.74 x 3.53
70.0	54.9	6.3	PSK300700	53.34 x 5.33
75.0	59.9	6.3	PSK300750	56.52 x 5.33
80.0	**64.9**	**6.3**	**PSK300800**	**62.87 x 5.33**
80.0	**59.5**	**8.1**	**PSK400800**	**58.00 x 7.00**
85.0	69.9	6.3	PSK300850	69.22 x 5.33
85.0	64.5	8.1	PSK400850	63.00 x 7.00
90.0	74.9	6.3	PSK300900	72.39 x 5.33
90.0	69.5	8.1	PSK400900	68.00 x 7.00
95.0	79.9	6.3	PSK300950	78.74 x 5.33
95.0	74.5	8.1	PSK400950	73.00 x 7.00
100.0	**84.9**	**6.3**	**PSK301000**	**81.92 x 5.33**
100.0	**79.5**	**8.1**	**PSK401000**	**78.00 x 7.00**
105.0	89.9	6.3	PSK301050	88.27 x 5.33
105.0	84.5	8.1	PSK401050	83.00 x 7.00
106.0	90.9	6.3	PSK301060	88.27 x 5.33
110.0	94.9	6.3	PSK301100	91.44 x 5.33
110.0	89.5	8.1	PSK401100	88.00 x 7.00
115.0	99.9	6.3	PSK301150	97.79 x 5.33
115.0	94.5	8.1	PSK401150	93.00 x 7.00
120.0	104.9	6.3	PSK301200	104.14 x 5.33
120.0	99.5	8.1	PSK401200	98.00 x 7.00
125.0	**109.9**	**6.3**	**PSK301250**	**107.32 x 5.33**
125.0	**104.5**	**8.1**	**PSK401250**	**103.00 x 7.00**
130.0	114.9	6.3	PSK301300	113.67 x 5.33
130.0	109.5	8.1	PSK401300	108.00 x 7.00
135.0	114.5	8.1	PSK401350	113.67 x 7.00
140.0	119.5	8.1	PSK401400	116.84 x 7.00
145.0	124.5	8.1	PSK401450	123.19 x 7.00
150.0	129.5	8.1	PSK401500	126.37 x 7.00
155.0	139.9	6.3	PSK301550	135.89 x 5.33
160.0	**144.9**	**6.3**	**PSK301600**	**142.24 x 5.33**
160.0	**139.5**	**8.1**	**PSK401600**	**135.89 x 7.00**
165.0	149.9	6.3	PSK301650	148.49 x 5.33
165.0	144.5	8.1	PSK401650	142.24 x 7.00
170.0	149.5	8.1	PSK401700	145.42 x 7.00
175.0	159.9	6.3	PSK301750	158.12 x 5.33
180.0	164.9	6.3	PSK301800	164.47 x 5.33
180.0	159.5	8.1	PSK401800	158.12 x 7.00
190.0	174.9	6.3	PSK301900	170.82 x 5.33
190.0	169.5	8.1	PSK401900	164.47 x 7.00
200.0	**184.9**	**6.3**	**PSK302000**	**183.52 x 5.33**
200.0	**179.5**	**8.1**	**PSK402000**	**177.17 x 7.00**
205.0	184.5	8.1	PSK402050	183.52 x 7.00
210.0	189.5	8.1	PSK402100	183.52 x 7.00
220.0	204.9	6.3	PSK302200	202.57 x 5.33
220.0	199.5	8.1	PSK402200	196.22 x 7.00
230.0	209.5	8.1	PSK402300	208.90 x 7.00
240.0	219.5	8.1	PSK402400	215.27 x 7.00

Bore Dia. D_N h9	Groove Dia. d_1 h9	Groove Width L_1 +0.2	TSS Part No.	O-Ring Dimensions
250.0	**229.5**	**8.1**	**PSK402500**	**227.97 x 7.00**
250.0	**226.0**	**8.1**	**PSK802500**	**227.97 x 7.00**
260.0	236.0	8.1	PSK802600	227.97 x 7.00
270.0	246.0	8.1	PSK802700	240.67 x 7.00
280.0	256.0	8.1	PSK802800	253.37 x 7.00
300.0	276.0	8.1	PSK803000	266.07 x 7.00
306.0	285.5	8.1	PSK403060	278.77 x 7.00
310.0	286.0	8.1	PSK803100	278.77 x 7.00
320.0	**299.5**	**8.1**	**PSK403200**	**291.47 x 7.00**
320.0	**296.0**	**8.1**	**PSK803200**	**291.47 x 7.00**
330.0	306.0	8.1	PSK803300	304.17 x 7.00
340.0	316.0	8.1	PSK803400	316.87 x 7.00
345.0	324.5	8.1	PSK403450	316.87 x 7.00
350.0	326.0	8.1	PSK803500	316.87 x 7.00
360.0	336.0	8.1	PSK803600	329.57 x 7.00
370.0	346.0	8.1	PSK803700	342.27 x 7.00
380.0	356.0	8.1	PSK803800	354.97 x 7.00
400.0	**376.0**	**8.1**	**PSK804000**	**367.67 x 7.00**
420.0	396.0	8.1	PSK804200	393.07 x 7.00
430.0	406.0	8.1	PSK804300	405.26 x 7.00
440.0	416.0	8.1	PSK804400	405.26 x 7.00
450.0	426.0	8.1	PSK804500	417.96 x 7.00

Bore Dia. D_N h9	Groove Dia. d_1 h9	Groove Width L_1 +0.2	TSS Part No.	O-Ring Dimensions
480.0	456.0	8.1	PSK804800	456.06 x 7.00
500.0	**476.0**	**8.1**	**PSK805000**	**468.76 x 7.00**
520.0	499.5	8.1	PSK405200	494.16 x 7.00
540.0	516.0	8.1	PSK805400	506.86 x 7.00
600.0	576.0	8.1	PSK806000	557.66 x 7.00
650.0	626.0	8.1	PSK806500	608.08 x 7.00
700.0	672.7	9.5	PSK507000	670.00 x 8.40
800.0	772.7	9.5	PSK508000	770.00 x 8.40
860.0	832.7	9.5	PSK508600	830.00 x 8.40
900.0	872.7	9.5	PSK509000	870.00 x 8.40
920.0	892.7	9.5	PSK509200	890.00 x 8.40
1000.0	972.7	9.5	PSK5X1000	970.00 x 8.40
1000.0	962.0	13.8	PSK6X1000	960.00 x 12.00
1200.0	1172.7	9.5	PSK5X1200	1170.00 x 8.40
1200.0	1162.0	13.8	PSK6X1200	1160.00 x 12.00
1500.0	1462.0	13.8	PSK6X1500	1460.00 x 12.00
2000.0	1962.0	13.8	PSK6X2000	1960.00 x 12.00
2700.0	2662.0	13.8	PSK6X2700	2660.00 x 12.00

The bore diameters in **bold** type comply with the recommendations of ISO 3320.

Other dimensions and all intermediate sizes up to 2700 mm diameter including imperial (inch) sizes can be supplied.

All O-Rings with 12 mm cross section are delivered as special profile ring.

Turcon® Stepseal® V

Single-acting

Rubber-energized plastic-faced seal

Material:
Turcon®, Zurcon® and Elastomer

■ Turcon® Stepseal® V*

■ Introduction

First invented by Trelleborg Sealing Solutions, a build-in check valve function eliminates pressure trap between seals in tandem sealing systems.

Stepseal® V has the efficient seal performance of the Turcon® Stepseal® range and the reliable prevention of pressure build-up brought by a refined check valve function. In dynamic applications Stepseal® V brings efficient, reliable sealing performance under even the most demanding service conditions.

Stepseal® V offers a uniform, low friction characteristic of the sealing system throughout its whole life, by preventing undefined pressurization of the secondary seal element.

CHARACTERISTICS

- Primary seal with hydrostatic ventilation
- Check valve function
- Hydrodynamic back-pumping
- Stabilised position in the groove
- Prolonged seal life
- Increased leakage control
- Only usable with a secondary seal

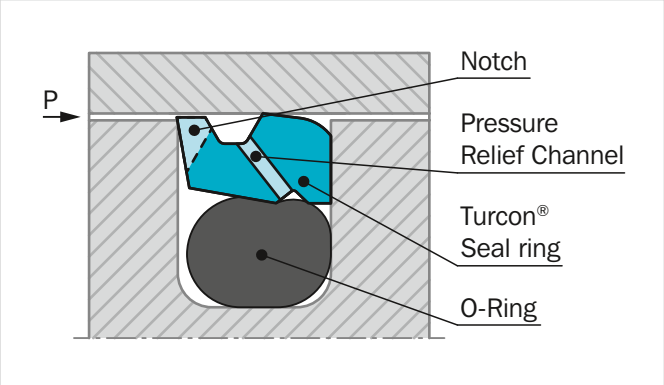

Figure 127: Turcon® Stepseal® V with tight axial groove fit

* Patent DE 9654357; 24. 2. 996

DESCRIPTION

Stepseal® V is a new generation primary seal designed for use in seal systems based on the dynamic, unidirectional Stepseal® sealing concept. Applied as a piston seal, Stepseal® V is preferably used with a double-acting seal from the Turcon® range of piston seals. Under extreme performance requirements Stepseal® V offers improved leakage control, extended service life and increased reliability.

The sealing performance of the patented Stepseal® V design – Figure 127 – results from a combination of the hydrodynamic properties of the seal and the O-Ring and the hydrostatic pressure relief check valve function.

The classic Stepseal® operation ensures a controlled pressure gradient that minimizes fluid adherence to the cylinder bore during the stroke, and enables residual fluid film on the bore to be returned under the seal on the return stroke.

The O-Ring check valve function controls the operation of the pressure relief channel: When the seal is pressurized by the system pressure the O-Ring keeps the channel closed to ensure that the hydraulic fluid is not passing through the channel and further between the groove wall and the Turcon® Seal Ring.

If the pressure is higher than the actual system pressure, appears between Stepseal® V and the secondary seal, the O-Ring opens the relief groove and the inter-seal pressure is immediately relieved.

Stepseal® V is available in high-grade Turcon® or Zurcon® materials with outstanding sliding and wear resistance properties.

ADVANTAGES:

- No system pressure on secondary sealing element
- Check valve function of O-Ring eliminates risk of fluid bypassing the seal during pressure loading when pressurised
- Independent of any speed relation of counter surface
- Independent of stroke length
- Independent of deflection
- Minimum contribution of friction of secondary sealing element
- Minimum wear of secondary sealing element
- Increased leakage control
- Prolonged seal life
- Increased operational reliability
- Fits standard Turcon® Stepseal® 2K groove dimensions as well as ISO 7425-1 seal housings

APPLICATION EXAMPLES

- Piston accumulators
- Single acting hydraulic cylinders
- Pistons with tandem sealing system
- Mobile crane boom cylinders
- Hydro plant cylinders
- Storm barrier cylinders
- Long stroke cylinders
- Gas spring suspension
- Piling Barges
- Theater hydraulics
- Safety systems

OPERATING CONDITIONS

Pressure:	Up to 50 MPa (Turcon® M12) Up to 60 MPa (Turcon® T08 and Zurcon® Z51)
Speed:	Up to 15 m/s with linear movements, frequency up to 15 Hz
Temperature:	-45 °C to +200 °C* depending on seal and O-Ring material
Media:	Mineral oil based hydraulic fluids, flame retardant hydraulic fluids, environmentally friendly hydraulic fluids (bio-oils), phosphate ester, water and others, depending on the seal and O-Ring material compatibility - see Table 117.
Clearance:	The maximum permissible radial clearance S_{max} is shown in Table 118, as a function of the operating pressure and functional diameter.

IMPORTANT NOTE

The above data are maximum values and cannot be used at the same time, e.g. the maximum operating speed depends on material type, pressure, temperature and gap value. Temperature range also depends on media.

* In the case of unpressurized applications in temperatures below 0 °C please contact your local Trelleborg Sealing Solutions marketing company for more information!

SERIES

Different cross section sizes are recommended as a function of the seal diameters.

Table 116 shows the relationship between the series number according to the seal diameter range and the different application class sizes:

Standard application:	General applications without exceptional operating conditions.
Light application:	Applications with demands for reduced friction or for smaller grooves.
Heavy-duty application:	For exceptional operating loads such as high pressures, pressure peaks, etc.

Table 116: Available Range

Series No.	Piston Diameter D_N H9
PSV20	15.0 - 200.0
PSV30	27.0 – 256.0
PSV40	60.0 – 700.0
PSV80	133.0 - 999.9
PSV50	250.0 - 999.9
PSV5X	1000.0 - 1200.0
PSV60	670.0 - 999.9
PSV6X	1000.0 - 2700.0

For the recommended Standard Application range see Table 118

REDUNDANT SEALING SYSTEM

In many applications a secondary seal is needed e.g. for safety requirements. Figure 128 shows such a tandem configuration with Stepseal® V.

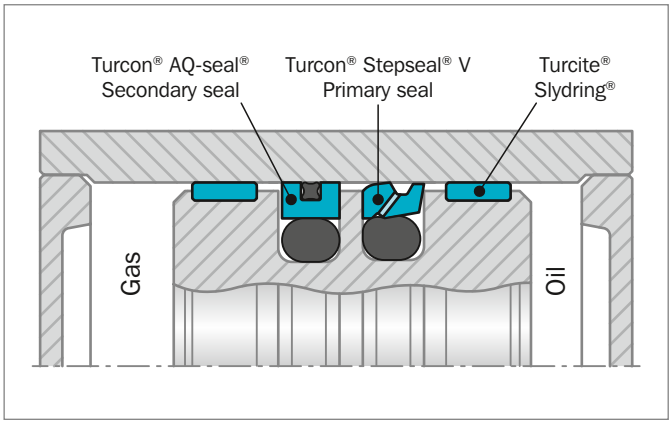

Figure 128: Tandem Turcon® Stepseal® V and Turcon® AQ-Seal® configuration in piston accumulator

When utilizing Stepseal® V, with valve function, there will be no pressure trap between the primary and secondary seals and no extra space between them is required to accumulate hydraulic fluid.

INSTALLATION INSTRUCTIONS

Stepseal® V is installed according to information on page 264 to page 266.

Closed groove installation according to dimensions in Table 88 page 266.

RECOMMENDED MATERIALS

The following material combinations have proven effective for hydraulic applications:

Turcon® Stepseal® V in Turcon® M12
All round material for light to heavy hydraulic applications with linear, short stroke or helical movements in mineral oils, flame retardant hydraulic fluids, phosphate ester, bio-oils or fluids having low lubricating properties:

O-Ring: NBR 70 Shore A N
FKM 70 Shore A V

Set code: M12N or M12V

Turcon® Stepseal® V Turcon® T46
For medium to heavy applications with linear movements in mineral oils and other media with good lubrication:

O-Ring: NBR 70 Shore A N
FKM 70 Shore A V

Set code: T46N or T46V

For specific applications, all Turcon® materials are available.

Other material combinations are listed in Table 117.

Table 117: Turcon® and Zurcon® Materials for Stepseal® V

Material, Applications, Properties	Code	O–Ring Material Shore A	Code	O-Ring Operating Temp.* °C	Mating Surface Material	MPa max. Dynamic
Turcon® M12 First material choice for seals in linear motion Overall improved properties For new constructions and updating For all commonly applied hydraulic fluids including fluids with low lubrication performance Lowest friction and best sliding properties Lowest wear on seals Improved absorption of abrasive contaminants Low wear or abrasion of counter surface BAM tested Mineral fiber and Additives filled Color: Dark gray	M12	NBR 70	N	-30 to +100	Steel Steel hardened Cast iron Stainless steel Titanium	50
		NBR 70 Low temp.	T	-45 to +80		
		FKM 70	V	-10 to +200		
Turcon® T05 For lubricating fluids Also for gas service Very low friction Very good sliding and sealing properties Color: Turquoise	T05	NBR 70	N	-30 to +100	Steel Steel hardened	20
		NBR 70 Low temp.	T	-45 to +80		
		FKM 70	V	-10 to +200		
Turcon® T08 For lubricating fluids and linear motion Very high compressive strength and extrusion resistance Hard counter surfaces is recommended Bronze filled Color: Light to dark brown, which may have variations in shading	T08	NBR 70	N	-30 to +100	Steel hardened Cast iron	60
		NBR 70 Low temp.	T	-45 to +80		
		FKM 70	V	-10 to +200		
Turcon® T10 For hydraulic and pneumatic For linear motion in lubricating and non-lubricating fluids High extrusion resistance Good chemical resistance Not for electrically conducting fluids BAM tested Carbon, graphite filled Color: Black	T10	NBR 70	N	-30 to +100	Steel Steel hardened Stainless steel	40
		NBR 70 Low temp.	T	-45 to +80		
		FKM 70	V	-10 to +200		
		EPDM 70	E**	-45 to +145		
Turcon® T29 For lubricating and non-lubricating fluids Good extrusion resistance Surface texture is not suitable for gas sealing Not for electrically conducting fluids Carbon fiber filled Color: Gray	T29	NBR 70	N	-30 to +100	Steel Steel hardened Cast iron Stainless steel	30
		NBR 70 Low temp.	T	-45 to +80		
		FKM 70	V	-10 to +200		
		EPDM 70	E**	-45 to +145		

Material, Applications, Properties	Code	O–Ring Material Shore A	Code	O-Ring Operating Temp.* °C	Mating Surface Material	MPa max. Dyna-mic
Turcon® T40 For lubricating and non-lubricating fluids High frequency and short strokes Water hydraulics Surface texture is not suitable for gas sealing Carbon fiber filled Color: Gray	T40	NBR 70	N	-30 to +100	Steel Steel hardened Cast iron Stainless steel Aluminum	25
		NBR 70 Low temp.	T	-45 to +80		
		FKM 70	V	-10 to +200		
		EPDM 70	E**	-45 to +145		
Turcon® T46 For lubricated hydraulics in linear motion High compressive strength High extrusion resistance Very good sliding and wear properties BAM tested Bronze filled Color: Light to dark brown, which may have variations in shading	T46	NBR 70	N	-30 to +100	Steel hardened Cast iron	50
		NBR 70 Low temp.	T	-45 to +80		
		FKM 70	V	-10 to +200		
Zurcon® Z51*** For mineral oil based fluids Very high abrasion and extrusion resistance For counter surface with rougher surface finish Limited chemical resistance Max. working temperature 110 °C Cast polyurethane Color: Yellow to light-brown	Z51	NBR 70	N	-30 to +100	Steel Steel hardened Cast iron Stainless steel Ceramic coating	60
		NBR 70 Low temp.	T	-45 to +80		
Zurcon® Z80 For lubricating and non-lubricating fluids Water based fluids, air and gases Dry air pneumatics High abrasion and extrusion resistance For service in abrasive conditions and media with particles Good chemical resistance Limited temperature capability (-60 to +80 °C) UHMWPE (Ultra High Molecular Weight Polyethylene) Color: White to off-white	Z80	NBR 70	N	-30 to (+100)	Steel Steel hardened Stainless steel Aluminum Ceramic coating	35
		NBR 70 Low temp.	T	-45 to +80		
		EPDM 70	E**	-45 to (+145)		

* The O-Ring Operation Temperature is only valid in mineral hydraulic oil (except EPDM).

** Material not suitable for mineral oils.

** Max. diameter 2300 mm

BAM: Tested by "Bundesanstalt Materialprufung, Germany".

Highlighted materials are recommended.

Installation Recommendation

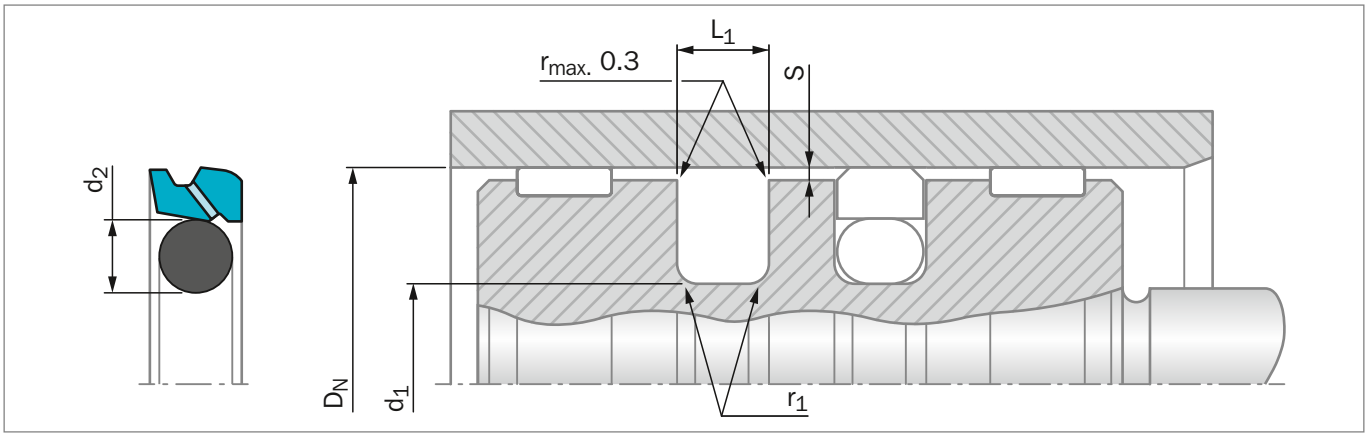

Figure 129: Installation Drawing

Table 118: Installation Dimensions – Standard Recommendations

Series No.	Bore Diameter D_N H9			Groove Diameter	Groove Width	Radius	Radial Clearance S_{max}*			O-Ring Cross Section
	Standard Application	Light Application	Heavy Duty Application	D_1 h9	L_1 +0.2	$r_{1\,max}$	10 MPa	20 MPa	40 MPa	d_2
PSV2	25 - 59.9	60 - 199.9	15 - 24.9	D_N - 10.7	4.2	1.0	0.50	0.30	0.20	3.53
PSV3	60 - 199.9	200 - 255.9	25 - 59.9	D_N - 15.1	6.3	1.3	0.70	0.40	0.25	5.33
PSV4	200 - 255.9	256 - 669.9	60 - 199.9	D_N - 20.5	8.1	1.8	0.80	0.60	0.35	7.00
PSV8	256 - 669.9	670 - 999.9	200 - 255.9	D_N - 24.0	8.1	1.8	0.90	0.70	0.40	7.00
PSV5	670 - 999.9	-	256 - 669.9	D_N - 27.3	9.5	2.5	1.00	0.80	0.50	8.40
PSV5X	-	1000 - 1200	-	D_N - 27.3	9.5	2.5	1.00	0.80	0.50	8.40
PSV6**	-	-	670 - 999.9	D_N - 38.0	13.8	3.0	1.20	0.90	0.60	12.00
PSV6X**	1000 - 2700	-	-	D_N - 38.0	13.8	3.0	1.20	0.90	0.60	12.00

* At pressures > **40 MPa** use diameter tolerance H8/f8 (bore/piston) in the area behind seal or consult your local Trelleborg Sealing Solutions marketing company for alternative material or profiles.

Slydring® / Wear Rings are not applicable at very small radial clearances please consult the Slydring® catalog.

** All O-Rings with 12 mm cross section are delivered as special profile ring

ORDERING EXAMPLE

Turcon® Stepseal® V complete with O-Ring, standard application:

Series:	PSV3 from Table 118
Bore Diameter:	D_N = 80.0 mm
TSS Part No.:	PSV300800 from Table 119

Select the material from Table 117. The corresponding code numbers are appended to the TSS Part No. Together these form the TSS Article Number. The TSS Article Number for all intermediate sizes can be determined by following the example:

TSS Article No. **PSV3 0 0800 - M12 N**

- Series No. — PSV3
- Type (Standard) — 0
- Bore Diameter x 10*** — 0800
- Quality Index (Standard) — -
- Material Code (Seal Ring) — M12
- Material Code (O-Ring) — N

*** For diameters D_N ≥ 1000.0 mm multiply only by factor 1.
Example: PSVK6 for diameter D_N = 1200.0 mm
TSS Article No.: PSV6**X1200** - M12N

Table 119: Installation Dimensions / TSS Part No.

Bore Dia. D_N f8/h9	Groove Dia. d_1 H9	Groove Width L_1 +0.2	TSS Part No.	O-Ring Dimensions
15.0	4.3	4.2	PSV200150	3.47 x 3.53
20.0	**9.3**	**4.2**	**PSV200200**	**8.47 x 3.53**
25.0	**14.3**	**4.2**	**PSV200250**	**13.87 x 3.53**
28.0	17.3	4.2	PSV200280	15.47 x 3.53
30.0	19.3	4.2	PSV200300	18.66 x 3.53
32.0	**21.3**	**4.2**	**PSV200320**	**20.22 x 3.53**
35.0	24.3	4.2	PSV200350	23.40 x 3.53
40.0	**29.3**	**4.2**	**PSV200400**	**28.17 x 3.53**
42.0	31.3	4.2	PSV200420	29.75 x 3.53
45.0	34.3	4.2	PSV200450	32.92 x 3.53
48.0	37.3	4.2	PSV200480	36.09 x 3.53
50.0	**39.3**	**4.2**	**PSV200500**	**37.69 x 3.53**
50.0	**34.9**	**6.3**	**PSV300500**	**32.69 x 5.33**
52.0	41.3	4.2	PSV200520	40.87 x 3.53
55.0	44.3	4.2	PSV200550	44.04 x 3.53
55.0	39.9	6.3	PSV300550	37.47 x 5.33
60.0	44.9	6.3	PSV300600	43.82 x 5.33
62.0	51.3	4.2	PSV200620	50.39 x 3.53
63.0	**52.3**	**4.2**	**PSV200630**	**50.39 x 3.53**
63.0	**47.9**	**6.3**	**PSV300630**	**46.99 x 5.33**
65.0	49.9	6.3	PSV300650	46.99 x 5.33
70.0	59.3	4.2	PSV200700	56.74 x 3.53
70.0	54.9	6.3	PSV300700	53.34 x 5.33
70.0	49.5	8.1	PSV400700	48.00 x 7.00
75.0	59.9	6.3	PSV300750	56.52 x 5.33
80.0	**64.9**	**6.3**	**PSV300800**	**62.87 x 5.33**
80.0	**59.5**	**8.1**	**PSV400800**	**58.00 x 7.00**
85.0	69.9	6.3	PSV300850	69.22 x 5.33
85.0	64.5	8.1	PSV400850	63.00 x 7.00
90.0	74.9	6.3	PSV300900	72.39 x 5.33
90.0	69.5	8.1	PSV400900	68.00 x 7.00
95.0	79.9	6.3	PSV300950	78.74 x 5.33
95.0	74.5	8.1	PSV400950	73.00 x 7.00
100.0	**84.9**	**6.3**	**PSV301000**	**81.92 x 5.33**
100.0	**79.5**	**8.1**	**PSV401000**	**78.00 x 7.00**
105.0	89.9	6.3	PSV301050	88.27 x 5.33
105.0	84.5	8.1	PSV401050	83.00 x 7.00
106.0	90.9	6.3	PSV301060	88.27 x 5.33
110.0	94.9	6.3	PSV301100	91.44 x 5.33
110.0	89.5	8.1	PSV401100	88.00 x 7.00

Bore Dia. D_N f8/h9	Groove Dia. d_1 H9	Groove Width L_1 +0.2	TSS Part No.	O-Ring Dimensions
115.0	99.9	6.3	PSV301150	97.79 x 5.33
115.0	94.5	8.1	PSV401150	93.00 x 7.00
120.0	104.9	6.3	PSV301200	104.14 x 5.33
120.0	99.5	8.1	PSV401200	98.00 x 7.00
125.0	**109.9**	**6.3**	**PSV301250**	**107.32 x 5.33**
125.0	**104.5**	**8.1**	**PSV401250**	**103.00 x 7.00**
130.0	114.9	6.3	PSV301300	113.67 x 5.33
130.0	109.5	8.1	PSV401300	108.00 x 7.00
135.0	114.5	8.1	PSV401350	113.67 x 7.00
140.0	119.5	8.1	PSV401400	116.84 x 7.00
145.0	124.5	8.1	PSV401450	123.19 x 7.00
150.0	129.5	8.1	PSV401500	126.37 x 7.00
155.0	139.9	6.3	PSV301550	135.89 x 5.33
160.0	**144.9**	**6.3**	**PSV301600**	**142.24 x 5.33**
160.0	**139.5**	**8.1**	**PSV401600**	**135.89 x 7.00**
165.0	149.9	6.3	PSV301650	148.49 x 5.33
165.0	144.5	8.1	PSV401650	142.24 x 7.00
170.0	149.5	8.1	PSV401700	145.42 x 7.00
175.0	159.9	6.3	PSV301750	158.12 x 5.33
180.0	164.9	6.3	PSV301800	164.47 x 5.33
180.0	159.5	8.1	PSV401800	158.12 x 7.00
190.0	174.9	6.3	PSV301900	170.82 x 5.33
190.0	169.5	8.1	PSV401900	164.47 x 7.00
195.0	174.5	8.1	PSV401950	170.82 x 7.00
200.0	**184.9**	**6.3**	**PSV302000**	**183.52 x 5.33**
200.0	**179.5**	**8.1**	**PSV402000**	**177.17 x 7.00**
205.0	184.5	8.1	PSV402050	183.52 x 7.00
210.0	189.5	8.1	PSV402100	183.52 x 7.00
220.0	204.9	6.3	PSV302200	202.57 x 5.33
220.0	199.5	8.1	PSV402200	196.22 x 7.00
230.0	209.5	8.1	PSV402300	208.90 x 7.00
240.0	219.5	8.1	PSV402400	215.27 x 7.00
250.0	**229.5**	**8.1**	**PSV402500**	**227.97 x 7.00**
250.0	**226.0**	**8.1**	**PSV802500**	**227.97 x 7.00**
260.0	236.0	8.1	PSV802600	227.97 x 7.00
270.0	246.0	8.1	PSV802700	240.67 x 7.00
280.0	256.0	8.1	PSV802800	253.37 x 7.00
300.0	276.0	8.1	PSV803000	266.07 x 7.00
306.0	285.5	8.1	PSV403060	278.77 x 7.00
310.0	286.0	8.1	PSV803100	278.77 x 7.00

Bore Dia. D_N f8/h9	Groove Dia. d_1 H9	Groove Width L_1 +0.2	TSS Part No.	O-Ring Dimensions
320.0	**299.5**	**8.1**	**PSV403200**	**291.47 x 7.00**
320.0	**296.0**	**8.1**	**PSV803200**	**291.47 x 7.00**
330.0	306.0	8.1	PSV803300	304.17 x 7.00
340.0	316.0	8.1	PSV803400	316.87 x 7.00
345.0	324.5	8.1	PSV403450	316.87 x 7.00
350.0	326.0	8.1	PSV803500	316.87 x 7.00
360.0	336.0	8.1	PSV803600	329.57 x 7.00
370.0	346.0	8.1	PSV803700	342.27 x 7.00
380.0	356.0	8.1	PSV803800	354.97 x 7.00
400.0	**376.0**	**8.1**	**PSV804000**	**367.67 x 7.00**
420.0	396.0	8.1	PSV804200	393.07 x 7.00
430.0	406.0	8.1	PSV804300	405.26 x 7.00
440.0	416.0	8.1	PSV804400	405.26 x 7.00
450.0	426.0	8.1	PSV804500	417.96 x 7.00
480.0	456.0	8.1	PSV804800	456.06 x 7.00
500.0	**476.0**	**8.1**	**PSV805000**	**468.76 x 7.00**
520.0	499.5	8.1	PSV405200	494.16 x 7.00
540.0	516.0	8.1	PSV805400	506.86 x 7.00
600.0	576.0	8.1	PSV806000	557.66 x 7.00
650.0	626.0	8.1	PSV806500	608.08 x 7.00

Bore Dia. D_N f8/h9	Groove Dia. d_1 H9	Groove Width L_1 +0.2	TSS Part No.	O-Ring Dimensions
700.0	672.7	9.5	PSV507000	670.00 x 8.40
780.0	752.7	9.5	PSV507800	750.00 x 8.40
800.0	772.7	9.5	PSV508000	770.00 x 8.40
820.0	792.7	9.5	PSV508200	790.00 x 8.40
860.0	832.7	9.5	PSV508600	830.00 x 8.40
900.0	872.7	9.5	PSV509000	870.00 x 8.40
920.0	892.7	9.5	PSV509200	890.00 x 8.40
1000.0	972.7	9.5	PSV5X1000	970.00 x 8.40
1000.0	962.0	13.8	PSV6X1000	960.00 x 12.00
1200.0	1172.7	9.5	PSV5X1200	1171.00 x 8.40
1200.0	1162.0	13.8	PSV6X1200	1160.00 x 12.00
1500.0	1462.0	13.8	PSV6X1500	1460.00 x 12.00
2000.0	1962.0	13.8	PSV6X2000	1960.00 x 12.00
2650.0	2612.0	13.8	PSV6X2650	2610.00 x 12.00
2700.0	2662.0	13.8	PSV6X2700	2660.00 x 12.00

The bore diameters in **bold** type comply with the recommendations of ISO 3320.

Other dimensions and all intermediate sizes up to 2700 mm diameter including imperial (inch) sizes can be supplied.

All O-Rings with 12 mm cross section are delivered as special profile ring.

Turcon® Double Delta®

Double-acting

Rubber-energized plastic-faced seal

For O-Ring Grooves

Material:
Turcon®, Zurcon® and Elastomer

Turcon® Double Delta®

Description

Turcon® Double Delta® is a rubber energized plastic faced seal, designed to expand and significantly improve the service parameters of O-Rings. Double Delta® can be installed in existing O-Ring grooves.

Double Delta® combines the flexibility and responsiveness of O-Rings with the wear and friction characteristics of the Turcon® materials in dynamic applications.

The double-acting performance of the seal follows from the symmetrical cross section which allows the seal to respond to pressure in both directions - Figure 130.

Initial contact pressure is provided by radial compression of the O-Ring. When the system pressure is increased the O-Ring transforms this into additional contact pressure, the contact pressure of the seal is thereby automatically adjusted so sealing is ensured under all service conditions.

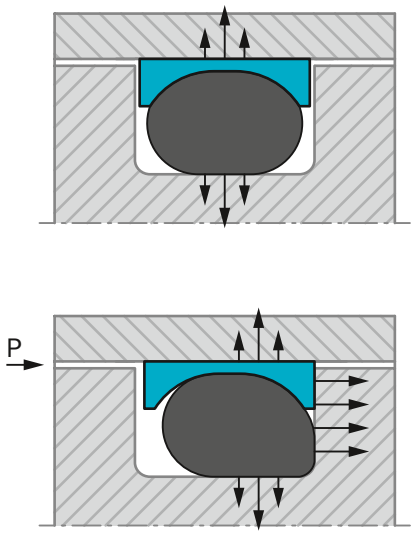

Figure 130: Turcon® Double Delta® without and with pressure

ADVANTAGES

- Compact groove dimensions and simple installation
- Low friction without stick-slip
- Resistance against wear and extrusion
- Piston seals available for all diameters from 5 to 999.9 mm
- Standard cross section cover AS 568A and important metric O-Rings, other cross sections available on request.
- Fits also groove dimensions per ISO 6194 and AS 4716

APPLICATION EXAMPLES

Turcon® Double Delta® is used as double acting piston seal for hydraulic and pneumatic cylinders in applications such as:

- Machine tools
- Handling devices
- Valves
- Chemical process equipment

It is particular recommended for light duty and small diameter applications.

OPERATING CONDITIONS

Pressure:	Up to 35 MPa
Velocity:	Up to 15 m/s
Temperature:	-45 °C to +200 °C* (according to O-Ring material)
Media:	Mineral oil-based hydraulic fluids, flame retardant hydraulic fluids, environmentally friendly hydraulic fluids (bio-oils), phosphate ester, water and others, depending on temperature, seal and O-Ring material compatibility see Table 120
Clearance:	The maximum permissible radial clearance S_{max} is shown in Table 121, as a function of the operating pressure and functional diameter

IMPORTANT NOTE

The above data are maximum values and cannot be used at the same time, e.g. the maximum operating speed depends on material type, pressure, temperature and gap value. Temperature range also depends on media.

* In the case of unpressurized piston applications in temperatures below 0 °C please contact your local Trelleborg Sealing Solutions marketing company for more information!

NOTCH

Turcon® Double Delta® is as standard supplied without radial notches, as the thin radial section of the seal gives good response to pressure variations.

For diameters from 8 mm notches on both sides are optional. These ensure direct pressurizing of the seal under all operating conditions.

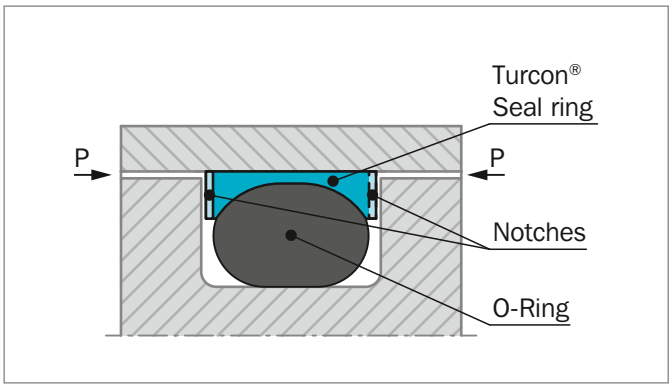

Figure 131: Turcon® Double Delta® with notches

INSTALLATION INSTRUCTIONS

Double Delta® is installed according to information on page 265.

RECOMMENDED MATERIALS

The following material combinations have proven effective for hydraulic applications:

Turcon® Double Delta® Turcon® M12
All round material for light to medium hydraulic applications with linear or helical movements in mineral oils, flame retardant hydraulic fluids, phosphate ester, bio-oils or fluids having low lubricating properties:

O-Ring:	NBR 70 Shore A	N
	FKM 70 Shore A	V
	EPDM 70 Shore A	E
Set code:	M12N, M12V or M12E	

Turcon® Double Delta® Turcon® T46
For medium to heavy applications with linear movements in mineral oils and other media with good lubrication:

O-Ring:	NBR 70 Shore A	N
	FKM 70 Shore A	V
Set code:	T46N or T46V	

For specific applications, all Turcon® materials are available. Other material combinations are listed in Table 120.

Table 120: Turcon® and Zurcon® Materials for Double Delta®

Material, Applications, Properties	Code	O-Ring Material Shore A	Code	O-Ring Operating Temp.* °C	Mating Surface Material	MPa max. Dyna-mic
Turcon® M12 First material choice for seals in linear motion Overall improved properties For new constructions and updating For all commonly applied hydraulic fluids including fluids with low lubrication performance Lowest friction and best sliding properties Lowest wear on seals Improved absorption of abrasive contaminants Low wear or abrasion of counter surface BAM tested Mineral fiber and Additives filled Color: Dark gray	M12	NBR 70	N	-30 to +100	Steel Steel hardened Cast iron Stainless steel Titanium	35
		NBR 70 Low temp.	T	-45 to +80		
		FKM 70	V	-10 to +20		
Turcon® T05 For lubricating fluids Also for gas service Very low friction Very good sliding and sealing properties Color: Turquoise	T05	NBR 70	N	-30 to +100	Steel Steel hardened	20
		NBR 70 Low temp.	T	-45 to +80		
		FKM 70	V	-10 to +200		
Turcon® T24 For lubricating and non-lubricating hydraulic fluids Good sealing function Moderate extrusion resistance Carbon filled Color: Black	T24	NBR 70	N	-30 to +100	Steel Steel hardened Cast iron Stainless steel Aluminum	20
		NBR 70 Low temp.	T	-45 to +80		
		FKM 70	V	-10 to +200		
		EPDM 70	E**	-45 to +145		
Turcon® T46 For lubricated hydraulics in linear motion High compressive strength High extrusion resistance Very good sliding and wear properties BAM tested Bronze filled Color: Light to dark brown, which may have variations in shading	T46	NBR 70	N	-30 to +100	Steel hardened Cast iron	35
		NBR 70 Low temp.	T	-45 to +80		
		FKM 70	V	-10 to +200		
Zurcon® Z80 For lubricating and non-lubricating fluids Water based fluids, air and gases Dry air pneumatics High abrasion and extrusion resistance For service in abrasive conditions and media with particles Good chemical resistance Limited temperature capability (-60 to +80 °C) UHMWPE (Ultra High Molecular Weight PE) Color: White to off-white	Z80	NBR 70	N	-30 to (+100)	Steel Steel hardened Stainless steel Aluminum Ceramic coating	30
		NBR 70 Low temp.	T	-45 to +80		
		EPDM 70	E**	-10 to (+145)		

* The O-Ring Operation Temperature is only valid in mineral hydraulic oil (except EPDM).
** Material not suitable for mineral oils.
BAM: Tested by "Bundesanstalt Materialprüfung, Germany".
Highlighted materials are recommended.

Installation Recommendation

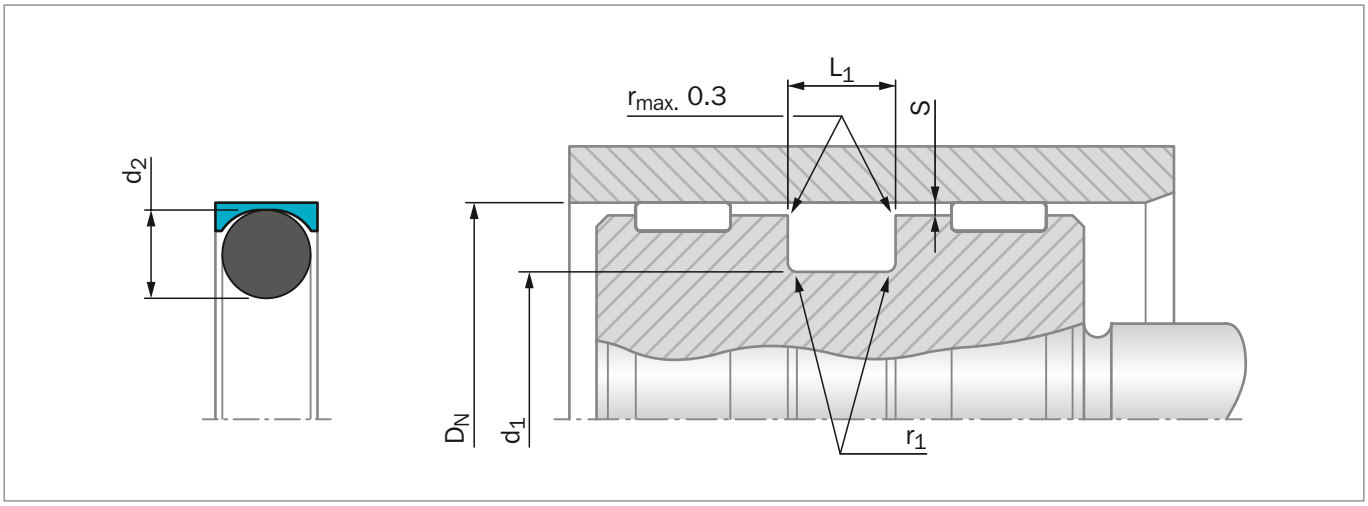

Figure 132: Installation Drawing

Table 121: Installation Dimensions

Series No.	Bore Diameter D_N H9		Groove Diameter	Groove Width	Radius	Radial Clearance S_{max}*				O-Ring Cross Section
	Standard Application	Available Range	d_1 h9	L_1 +0.2	$r_{1\,max}$	2 MPa	10 MPa	20 MPa	35 MPa	d_2
PDD0	5 - 13.9	5 - 139.9	D_N - 2.9	2.4	0.4	0.10	0.10	0.08	0.05	1.78
PDD1	14 - 24.9	8 - 259.9	D_N - 4.5	3.6	0.4	0.15	0.15	0.10	0.07	2.62
PDD2	25 - 45.9	12 - 469.9	D_N - 6.2	4.8	0.6	0.25	0.20	0.15	0.08	3.53
PDD3	46 - 124.9	20 - 669.9	D_N - 9.4	7.1	0.8	0.35	0.25	0.20	0.10	5.33
PDD4	125 - 669.9	80 - 999.9	D_N - 12.2	9.5	0.8	0.50	0.30	0.25	0.15	7.00
PDD5	670 - 999.9	125 - 999.9	D_N - 15.0	10.0	1.0	0.60	0.40	0.30	0.20	8.40

* Slydring® / Wear Rings are not applicable at very small radial clearances please consult the Slydring® catalog.

ORDERING EXAMPLE

Double Delta® complete with O-Ring, standard application:

Series:	PDD3 from Table 121
Bore Diameter:	D_N = 80.0 mm
TSS Part No.:	PDD300800 from Table 122

Select the material from Table 120. The corresponding code numbers are appended to the Part No. Together these form the TSS Article Number. The TSS Article Number for all intermediate sizes can be determined by following the example:

TSS Article No. PDD3 0 0800 - M12 N

- TSS Series No. — PDD3
- Type (Standard)** — 0
- Bore Diameter x 10 — 0800
- Quality Index (Standard) — -
- Material Code (Seal Ring) — M12
- Material Code (O-Ring) — N

** "N" for seals with notches. Available for diameters $D_N \geq 8.0$ mm.

For seals for other groove widths/dimensions please refer to Table 123 and Table 124

Table 122: Installation Dimensions / TSS Part No.

Bore Dia. D_N H9	Groove Dia. d_1 h9	Groove Width L_1 +0.2	TSS Part No.	O-Ring Dimensions
6.0	3.1	2.4	PDD000060	2.57 x 1.78
8.0	**5.1**	**2.4**	**PDD000080**	**4.47 x 1.78**
9.0	6.1	2.4	PDD000090	5.60 x 1.80
10.0	**7.1**	**2.4**	**PDD000100**	**6.70 x 1.80**
11.0	8.1	2.4	PDD000110	7.65 x 1.78
12.0	**9.1**	**2.4**	**PDD000120**	**8.75 x 1.80**
12.7	9.8	2.4	PDD000127	9.25 x 1.78
14.0	9.5	3.6	PDD100140	9.19 x 2.62
15.0	10.5	3.6	PDD100150	9.19 x 2.62
16.0	**11.5**	**3.6**	**PDD100160**	**10.77 x 2.62**
18.0	13.5	3.6	PDD100180	12.37 x 2.62
20.0	**15.5**	**3.6**	**PDD100200**	**14.50 x 2.65**
22.0	17.5	3.6	PDD100220	17.12 x 2.62
24.0	19.5	3.6	PDD100240	18.72 x 2.62
25.0	**18.8**	**4.8**	**PDD200250**	**17.04 x 3.53**
25.4	19.2	4.8	PDD200254	18.66 x 3.53
27.0	20.8	4.8	PDD200270	20.22 x 3.53
28.0	21.8	4.8	PDD200280	20.22 x 3.53
30.0	23.8	4.8	PDD200300	23.40 x 3.53
32.0	**25.8**	**4.8**	**PDD200320**	**25.00 x 3.53**
35.0	28.8	4.8	PDD200350	28.17 x 3.53
40.0	**33.8**	**4.8**	**PDD200400**	**32.92 x 3.53**
42.0	35.8	4.8	PDD200420	34.52 x 3.53
45.0	38.8	4.8	PDD200450	37.69 x 3.53
48.0	38.6	7.1	PDD300480	37.47 x 5.33
50.0	**40.6**	**7.1**	**PDD300500**	**37.47 x 5.33**
50.8	41.4	7.1	PDD300508	40.64 x 5.33
52.0	42.6	7.1	PDD300520	40.64 x 5.33
55.0	45.6	7.1	PDD300550	43.82 x 5.33
56.0	46.6	7.1	PDD300560	43.82 x 5.33
60.0	50.6	7.1	PDD300600	50.17 x 5.33
63.0	**53.6**	**7.1**	**PDD300630**	**53.34 x 5.33**
65.0	55.6	7.1	PDD300650	53.34 x 5.33
70.0	60.6	7.1	PDD300700	59.69 x 5.33
75.0	65.6	7.1	PDD300750	62.87 x 5.33
80.0	**70.6**	**7.1**	**PDD300800**	**69.22 x 5.33**
85.0	75.6	7.1	PDD300850	72.39 x 5.33
90.0	80.6	7.1	PDD300900	78.74 x 5.33
95.0	85.6	7.1	PDD300950	81.92 x 5.33
100.0	**90.6**	**7.1**	**PDD301000**	**88.27 x 5.33**
110.0	100.6	7.1	PDD301100	97.79 x 5.33
115.0	105.6	7.1	PDD301150	104.14 x 5.33
120.0	110.6	7.1	PDD301200	107.32 x 5.33
125.0	**112.8**	**9.5**	**PDD401250**	**113.67 x 7.00**
130.0	117.8	9.5	PDD401300	116.84 x 7.00
135.0	122.8	9.5	PDD401350	120.02 x 7.00
140.0	127.8	9.5	PDD401400	126.37 x 7.00
150.0	137.8	9.5	PDD401500	135.89 x 7.00
160.0	**147.8**	**9.5**	**PDD401600**	**145.42 x 7.00**
170.0	157.8	9.5	PDD401700	151.77 x 7.00
180.0	167.8	9.5	PDD401800	164.47 x 7.00
190.0	177.8	9.5	PDD401900	177.17 x 7.00
200.0	**187.8**	**9.5**	**PDD402000**	**183.52 x 7.00**
210.0	197.8	9.5	PDD402100	196.22 x 7.00
220.0	207.8	9.5	PDD402200	202.57 x 7.00
230.0	217.8	9.5	PDD402300	215.27 x 7.00
240.0	227.8	9.5	PDD402400	227.97 x 7.00
250.0	**237.8**	**9.5**	**PDD402500**	**227.97 x 7.00**
280.0	267.8	9.5	PDD402800	266.07 x 7.00
300.0	287.8	9.5	PDD403000	278.77 x 7.00
320.0	**307.8**	**9.5**	**PDD403200**	**304.17 x 7.00**
350.0	337.8	9.5	PDD403500	329.57 x 7.00
400.0	**387.8**	**9.5**	**PDD404000**	**380.37 x 7.00**
420.0	407.8	9.5	PDD404200	405.26 x 7.00
450.0	437.8	9.5	PDD404500	430.66 x 7.00
480.0	467.8	9.5	PDD404800	456.06 x 7.00
500.0	**487.8**	**9.5**	**PDD405000**	**481.38 x 7.00**
600.0	587.8	9.5	PDD406000	582.68 x 7.00
650.0	637.8	9.5	PDD406500	633.48 x 7.00

The bore diameters in **bold** type comply with the recommendations of ISO 3320.

TSS Part No. for other dimensions and all intermediate dimensions up to 999.9 mm diameter including imperial (inch) dimensions can be supplied. Larger dimensions up to 2700 mm available upon request.

Turcon® Double Delta® for one Back-up Ring grooves

Double Delta® is available for designs where grooves for O-Ring with one Back-up Ring are used according to Table 123.

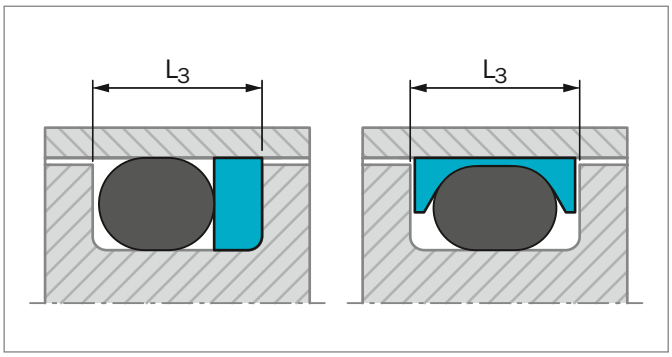

Figure 133: Groove width

Table 123: Seals for one Back-up Ring groove

Series No.	Groove Width	Execution Mark 5th digit		O-Ring Cross Section
	L_3	Without Notch	With Notch*	d_2
PDA0	3.80	0	N	1.78
PDA1	4.65	0	N	2.62
PDA2	5.70	0	N	3.53
PDA3	8.50	0	N	5.33
PDA4	11.20	0	N	7.00
PDA5	12.50	0	N	8.40

* Available for diameters from 8 mm

ORDERING EXAMPLE

Double Delta® complete with O-Ring, standard application:

Bore Diameter:	D_N = 80 mm
Groove Diameter:	70.6 mm
Groove Width:	8.5 mm
TSS Article No.:	PDA300800-M12N

TSS Article No. PDA3 0 0800 - M12 N

TSS Series No.**
Type (Standard)***
Bore Diameter x 10
Quality Index (Standard)
Material Code (Seal Ring)****
Material Code (O-Ring)*****

** From Table 123 or Table 124
*** N for seals with notches, available from diameter 8.0 mm
**** From Table 120
***** From Table 120

Turcon® Double Delta® for metric O-Rings

Double Delta® is available for installation in grooves for metric O-Rings as listed in Table 124.

Table 124: Piston Seals for Metric O-Ring Grooves

O-Ring Cross Section	Groove Diameter	Groove Width	Series No.	Execution Mark 5th digit		Available Range
d_2	d_1 h9	L_1 +0.2		Standard	Notch*	
2.0	D_N - 3.3	2.7	PD2A	0	N	6 - 100.0
2.4	D_N - 4.1	3.2	PD2E	0	N	8 - 160.0
2.5	D_N - 4.3	3.3	PD2F	0	N	8 - 160.0
3.0	D_N - 5.2	4.0	PD3A	0	N	12 - 200.0
4.0	D_N - 7.0	5.2	PD4A	0	N	16 - 300.0
5.0	D_N - 8.8	6.6	PD5A	0	N	20 - 400.0
5.7	D_N - 10.0	7.2	PD5H	0	N	20 - 669.9

* Available for diameters from 8 mm

Turcon® Variseal® M2

Single-acting

Spring-energized plastic-U-Cup

Material:
Turcon® and Zurcon®

Turcon® Variseal® M2

Description

Turcon® Variseal® M2 is a single-acting seal consisting of a U-shaped jacket and a V-shaped corrosion resistant spring. Variseal® M2 has an asymmetric seal profile. The optimized front angle offers good leakage control, reduced friction and long service life.

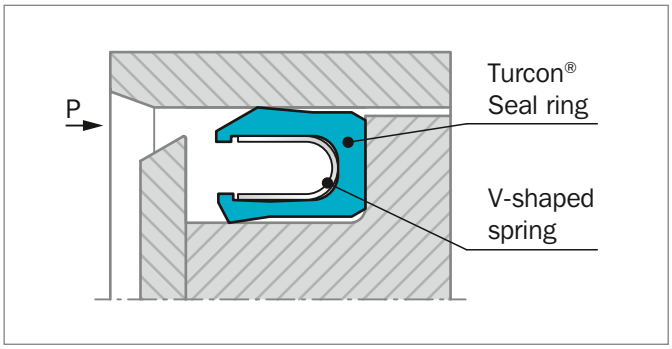

Figure 134: Turcon® Variseal® M2

ADVANTAGES

- Suitable for reciprocating and rotary applications
- Low coefficient of friction
- Stick-slip free operating
- High abrasion resistance
- Dimensionally stable
- Resistant to most fluids, chemicals and gases
- Withstands rapid changes in temperature
- No vulcanizing between seal and hardware
- Excellent resistance to aging
- Can be sterilized
- Available in Hi-Clean version
- Interchangeable with O-Ring and Back-up Ring combinations to AS4716 and ISO 6194

AREAS OF APPLICATION

- Hydraulic components, e.g. cylinders, valves, pumps, etc.
- Chemical processing equipment
- Pharmaceutical processing
- Food and beverage processing
- Spindle seals for machine tools
- Pneumatics, cylinders and valves

OPERATING CONDITIONS

Operating Pressure:	Maximum dynamic load: 20 MPa Maximum static load: 40 MPa (200 MPa with back-up ring)
Speed:	Reciprocating up to 15 m/s Rotating up to 1.3 m/s
Operating Temperature:	-70 °C to +300 °C Special Turcon® and Zurcon® materials as well as alternative spring materials are available for applications outside this temperature range.
Media Compatibility:	Virtually all fluids, chemicals and gases

IMPORTANT NOTE

The above data are maximum values and cannot be used at the same time. e.g. the maximum operating speed depends on material type, pressure, temperature and value.
Temperature range also dependent on media.

GENERAL

Turcon® Variseal® are single acting, spring-energized seals which are used for dynamic and static applications.

Variseal® are effective in a wide range of applications. They are chosen when higher resistance to chemical media is required, if the seal is required to operate in extremes of temperature and/or where good extrusion and compression characteristics are needed.

Turcon® Variseal® designs have three main characteristics:

- Application specific U-shaped seal profile
- Spring geometry suited to the particular application
- Proven high-performance Turcon® or Zurcon® polymers

Standard or custom geometries available in metric, inch and intermediate sizes ranging from 2 to 3300 mm.

METHOD OF OPERATION

All Variseal® designs included in this catalog have the same operating principle and differ only in their profile form and type of metallic spring used.

The Variseal® spring supplies the load required for sealing at low pressures (Figure 135). The "U" shaped jacket allows fluid pressure to energize the sealing lips, so total sealing pressure rises with increasing operating pressure (Figure 136).

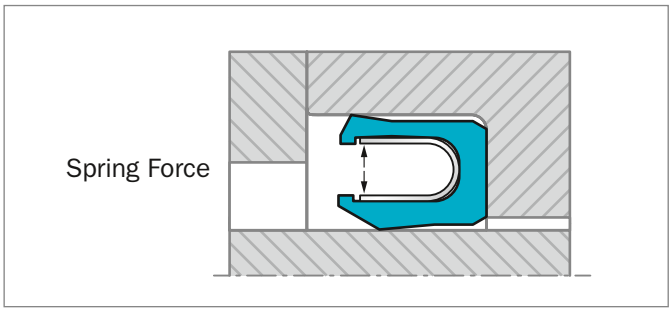

Figure 135: Turcon® Variseal® without system pressure

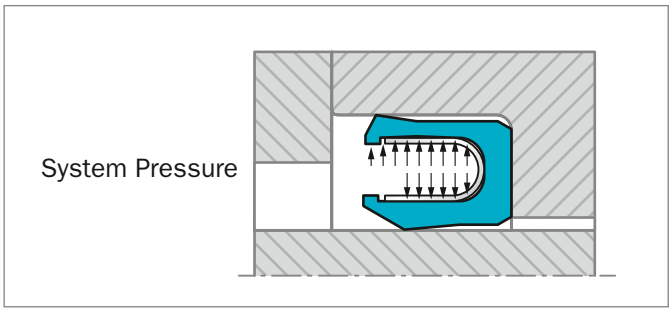

Figure 136: Turcon® Variseal® with system pressure

PERFORMANCE

The different types of Variseal® designs combined with the properties of Turcon® and Zurcon® materials offer design engineers a wide range of solutions to a large number of applications.

The most important characteristics of Variseal® designs are listed below:

- Very low coefficient of friction
- Good dynamic and static sealing
- Capable of sealing at high speeds up to 15 m/s
- Almost universal chemical compatibility
- Operating temperature of -253 °C up to +300 °C
- Very good thermal resistance
- Properties unaffected by contact with chemicals
- Good aging characteristics
- Low compression set
- Capable of withstanding high pressures above 200 MPa (2000 bar) when using Back-up Rings
- Very good dry-running properties
- Can be installed in grooves according to AS4716 (Mil-G-5514 is an old spec) and DIN 3771

MATERIALS

All materials used are physiologically safe. They contain no odor or taste-affecting substances.

The following material combination has proved effective for most fluid applications:

Seal ring: Turcon® T 40
Spring: Stainless steel, Material No. AISI 301
Material code S

For gas applications use:
Seal ring: T05 or Z80

For use in accordance with the demands of the Food and Drug Administration, suitable materials are available on request.

Table 125: Turcon® and Zurcon® Materials for Variseal® M2

Material Code Material Description	Operating Temperature* °C	Mating Surface Material	MPa max.
Turcon® T05 Premium grade modified PTFE. Light duty material with greater wear resistance than Turcon T01. Reciprocating and slow rotary applications. Color: Turquoise	-200 to + 260	Steel Steel, chromeplated Cast iron Stainless steel Aluminum Bronze Alloys	20
Turcon® T40 High-grade formulation of virgin polytetrafluoroethylene (PTFE) based material compounded with carbon fiber additive. Excellent wear and low friction characteristics. Suited to reciprocating and rotary applications. Suitable for use in media with poor lubricating properties and for dry-running situations. Color: Black / gray	-60 to + 300	Steel, hardened Steel, chromeplated	40
Zurcon® Z48 TPE (thermoplastic elastomer) for tight sealing with long wear life in applications without high temperatures or corrosive chemicals. Color: Black	-62 to +135	Steel Steel, chromeplated Cast iron Stainless steel Aluminum Bronze Alloys Ceramic coating	40
Zurcon® Z80 UHMW Polyethylene. Excellent wear and abrasion resistance. Very good lubricity in water based media. Color: Translucent white	-253 to +93	Steel Steel, chromeplated Stainless steel Aluminum Bronze Ceramic coating	40

* Depending on media. Highlighted material is standard.

Installation of Spring Energized Seals
See page 264

SPRING MATERIALS

The standard spring material for Turcon® Variseal® is stainless steel (spring code S).

Table 126: Spring Material

Media	Spring materials	Spring order code
For General use e.g. Oil Grease Air Water, steam Solvents Food, drugs Gas	**Stainless steel** DIN Mat No. 1.4310/1.4319 AISI 301/302 UNS 30100	S (Standard spring material)
For use in corrosive media e.g. Acids Caustics Seawater	**Hastelloy®** C-276 DIN Mat No. 2.4819 UNS N10276	H
For petrochemical use e.g. Crude oil Sour gas	**Elgiloy®** 1) DIN Mat No. 2.4711 UNSR30003	E

® Hastelloy is a registered trademark of Haynes International, Inc.
® Elgiloy is a registered trademark of the Elgiloy Specialty Metals
Alternative brand may be used.
1) NACE-approval

Groove Design – Metric

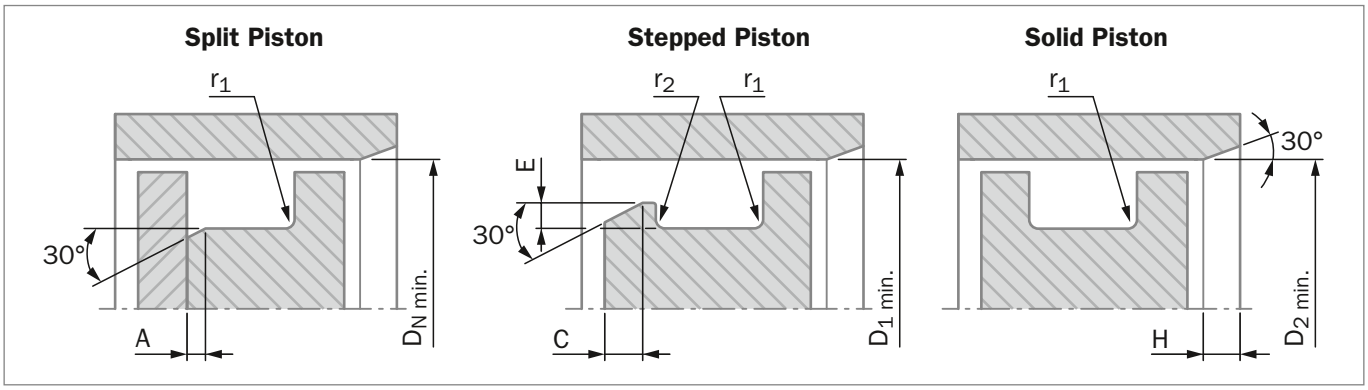

Figure 137: Variseal Groove Configurations

Installation lead-in chamfers and steps to include blend radii and are to be polished.

Table 127: Dimensions for Groove Designs

Series	Piston Diameter Recommendations		
	Split Groove Ø D_N Minimum	Stepped Groove Ø D_1 Minimum	Solid Groove Ø D_2 Minimum
000	6.00	11.50	34.93
100	10.00	17.50	50.80
200	16.00	20.00	69.85
300	28.00	28.00	104.78
400	45.00	45.00	139.70
500	100.00	100.00	254.00

Installation Recommendation

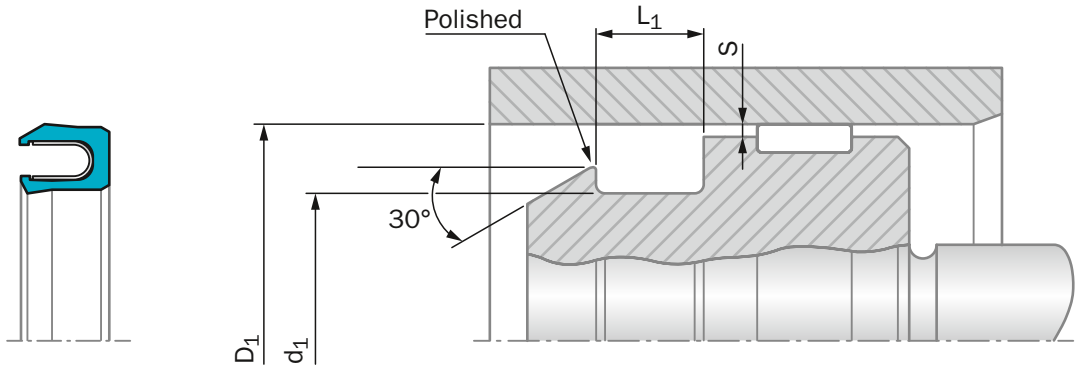

Figure 138: Installation Drawing, see Figure 137 for addition groove details

Table 128: Installation Dimensions

Series No.	Bore Diameter D_1 H9		Groove Diameter	Groove Width	Radial Clearance S_{max}*			
	Standard Range	Extended** Range	d_1 h9	L_1 +0.2	<2 MPa	<10 MPa	<20 MPa	<40 MPa
PVA0	6 - 13.9	6 - 40	D_N - 2.9	2.4	0.20	0.10	0.08	0.05
PVA1	14 - 24.9	10 - 200	D_N - 4.5	3.6	0.25	0.15	0.10	0.07
PVA2	25 - 45.9	16 - 400	D_N - 6.2	4.8	0.35	0.20	0.15	0.08
PVA3	46 - 124.9	28 - 700	D_N - 9.4	7.1	0.50	0.25	0.20	0.10
PVA4	125 - 999.9	45 - 1600	D_N - 12.2	9.5	0.60	0.30	0.25	0.12
PVA5	1000 - 2500	100 - 2500	D_N - 19.0	15.0	0.90	0.50	0.40	0.20

* At pressures **> 40 MPa** use diameter tolerance H8/f8 (bore/piston) in area of the seal. ** Available on request.

Table 129: Installation Dimensions / TSS Part No

D_N	d_1	TSS Part No.	D_N	d_1	TSS Part No.	D_N	d_1	TSS Part No.
6.0	3.1	PVA0_0060	45.0	38.8	PVA2_0450	115.0	105.6	PVA3_1150
8.0	**5.1**	**PVA0_0080**	48.0	38.6	PVA3_0480	120.0	110.6	PVA3_1200
10.0	**7.1**	**PVA0_0100**	**50.0**	**40.6**	**PVA3_0500**	**125.0**	**112.8**	**PVA4_1250**
12.0	**9.1**	**PVA0_0120**	52.0	42.6	PVA3_0520	130.0	117.8	PVA4_1300
14.0	9.5	PVA1_0140	55.0	45.6	PVA3_0550	135.0	122.8	PVA4_1350
15.0	10.5	PVA1_0150	60.0	50.6	PVA3_0600	140.0	127.8	PVA4_1400
16.0	**11.5**	**PVA1_0160**	**63.0**	**53.6**	**PVA3_0630**	150.0	137.8	PVA4_1500
18.0	13.5	PVA1_0180	65.0	55.6	PVA3_0650	**160.0**	**147.8**	**PVA4_1600**
20.0	**15.5**	**PVA1_0200**	70.0	60.6	PVA3_0700	170.0	157.8	PVA4_1700
22.0	17.5	PVA1_0220	75.0	65.6	PVA3_0750	180.0	167.8	PVA4_1800
25.0	**18.8**	**PVA2_0250**	**80.0**	**70.6**	**PVA3_0800**	190.0	177.8	PVA4_1900
28.0	21.8	PVA2_0280	85.0	75.6	PVA3_0850	**200.0**	**187.8**	**PVA4_2000**
30.0	23.8	PVA2_0300	90.0	80.6	PVA3_0900	210.0	97.8	PVA4_2100
32.0	**25.8**	**PVA2_0320**	95.0	85.6	PVA3_0950	220.0	207.8	PVA4_2200
35.0	28.8	PVA2_0350	**100.0**	**90.6**	**PVA3_1000**	230.0	217.8	PVA4_2300
40.0	**33.8**	**PVA2_0400**	105.0	95.6	PVA3_1050	240.0	227.8	PVA4_2400
42.0	35.8	PVA2_0420	110.0	100.6	PVA3_1100	**250.0**	**237.8**	**PVA4_2500**

ORDERING EXAMPLE

Turcon® Variseal® M2, standard range:

Series:	PVA3 from Table 128
Bore Diameter:	D_N = 80.0 mm
TSS Part No.:	PVA300800

Select the material from Table 125. The corresponding code numbers are appended to the TSS Part No. from Table 129. Together they form the TSS Article No. For all intermediate sizes not shown in Table 129, the TSS Article No. can be determined from the example opposite.

TSS Article No. PVA3 0 0800 - T40 S (R)

- TSS Series No.
- Type (Standard)
- Bore Diameter x 10**
- Quality Index (Standard)
- Material Code (Seal Ring)
- Material Code (Spring)
- Hi Clean-Option

** For diameters $D_N \geq 1000.0$ mm multiply only by factor 1.
Example: PVA5 for diameter D_N = 1200.0 mm
TSS Article No.: PVA5**X1200** - T40S

Turcon® VL Seal®

Double-acting

Rubber-energized plastic-faced seal

Material:
Turcon®, Zurcon® and Elastomer

Turcon® VL Seal®*

Description

Turcon® VL Seal® is a new generation unidirectional Piston seal for the same groove dimensions as standard O-Rings, Figure 139.

The design is optimized with regard to performance, friction, leakage and service life through meticulous simulation, in-house testing and qualification in customer applications.

VL Seal® effectively provides static sealing by the O-Ring. The O-Ring is protected from damage under pressure cycles by the contoured O-Ring contact zone which supports the O-Ring and keeps it in position also at high working pressure.

VL Seal® is designed with hydrodynamic back-pumping effect which allows the seal to relieve pressure trapped between seals in tandem configuration.

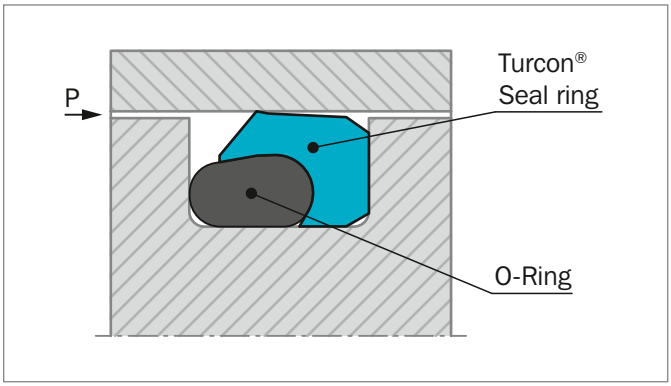

Figure 139: Turcon® VL Seal® mounted in O-Ring groove

METHOD OF OPERATION

The sealing mechanism of VL Seal® is based on the hydrodynamic properties of the seal. The specially formed seal edge has a steep contact pressure gradient on the high pressure side and a shallow contact pressure gradient on the low pressure side. This ensures that the fluid film adhering to the cylinder bore is returned to the high pressure chamber on the return stroke of the piston minimizing the risk of leaks.

This also prevents the build-up of inter-seal pressure normally associated with tandem seal configurations. Inter-seal pressure depends on the system pressure, speed, stroke length and groove design.

ADVANTAGES

- Groove design with shallow radial depth
- Optimized leakage control and service life
- Low friction with small contact area between seal and counter surface
- Featuring the Turcon® Stepseal® 2K back pumping effect
- Utilize standard O-Ring installation groove
- Available in all diameter sizes from 10 to 2700 mm

APPLICATION EXAMPLES

VL Seal® is recommended for hydraulics and general machine construction as an alternative to Stepseal® 2K and other single acting seals, for example in:

- Machine tools
- Automation
- Handling devises
- Single acting cylinders
- Automobile industry
- Servo hydraulics
- Down-hole tools
- O-Ring replacement

* Patent pending. (US Patent No. 6,497,415)

OPERATING CONDITIONS

Pressure:	Up to 60 MPa
Speed:	Up to 15 m/s for Turcon® materials with linear movements frequency up to 5 Hz
Temperature:	-45 °C to +200 °C* depending on seal and O-Ring material
Media:	Mineral oil-based hydraulic fluids, flame retardant hydraulic fluids, environmentally friendly hydraulic fluids (bio-oils), phosphate ester, water and others, depending on the seal and O-Ring material compatibility see Table 130
Clearance:	The maximum permissible radial clearance S_{max} is shown in Table 131, as a function of the operating pressure and functional diameter.

IMPORTANT NOTE

The above data are maximum values and cannot be used at the same time, e.g. the maximum operating speed depends on material type, pressure, temperature and gap value. Temperature range also depends on media.

* In the case of unpressurized piston applications in temperatures below 0 °C please contact your local Trelleborg Sealing Solutions marketing company for more information!

RADIAL NOTCH

VL Seal® can be delivered with radial notches at the low pressure side. This is an advantage if the seal is used in rotary applications. Notches can prevent the seal from rotating in the groove by avoiding pressurised fluid being trapped between seal and groove corner.

INSTALLATION INSTRUCTIONS

VL Seal® is dimensionally interchangeable with seals for O-Ring housings, like Turcon® Double Delta® and Turcon® Variseal® M2. Groove dimensions, radial clearances and recommended seal series in relation to diameter are as illustrated in Table 131.

VL Seal® is preferably installed in closed grooves according to Figure 104 page 267. Depending on type and size installation in split grooves is also possible. Recommended minimum diameters for installation in closed grooves, see Table 89 page 267.

RECOMMENDED MATERIALS

The following material combinations have proven effective for hydraulic applications:

Turcon® VL Seal® Turcon® M12
All round material for light to heavy hydraulic applications with linear, short stroke or helical movements in mineral oils, flame retardant hydraulic fluids, phosphate ester, bio-oils or fluids having less satisfactory lubricating properties:

O-Ring:	NBR 70 Shore A	N
	FKM 70 Shore A	V
Set code:	M12N or M12V	

Turcon® VL Seal® Turcon® T46
For medium to heavy applications with linear movements in mineral oils and other media with good lubrication:

O-Ring:	NBR 70 Shore A	N
	FKM 70 Shore A	V
Set code:	T46N or T46V	

Zurcon® Z52 is recommended for VL Seal® as alternative to polyurethane U-Cups especially outside the size range of these products.

For specific applications, all Turcon® materials are available.

Other material combinations are listed in Table 132.

Table 130: Turcon® and Zurcon® Materials for VL Seal®

Material, Applications, Properties	Code	O–Ring Material Shore A	Code	O-Ring Operating Temp.* °C	Mating Surface Material	MPa max. Dyna-mic
Turcon® M12 First material choice for seals in linear motion Overall improved properties For new constructions and updating For all commonly applied hydraulic fluids including fluids with low lubrication performance Lowest friction and best sliding properties Lowest wear on seals Improved absorption of abrasive contaminants Low wear or abrasion of counter surface BAM tested Mineral fiber and Additives filled Color: Dark gray	M12	NBR 70	N	-30 to +100	Steel Steel hardened Cast iron Stainless steel Titanium	50
		NBR 70 Low temp.	T	-45 to +80		
		FKM 70	V	-20 to +200		
Turcon® T05 For lubricating fluids Also for gas service Very low friction Very good sliding and sealing properties Color: Turquoise	T05	NBR 70	N	-30 to +100	Steel Steel hardened	20
		NBR 70 Low temp.	T	-45 to +80		
		FKM 70	V	-10 to +200		
Turcon® T08 For lubricating fluids and linear motion Very high compressive strength and extrusion resistance Hard counter surfaces is recommended Bronze filled Color: Light to dark brown, which may have variations in shading	T08	NBR 70	N	-30 to +100	Steel hardened Cast iron	60
		NBR 70 Low temp.	T	-45 to +80		
		FKM 70	V	-10 to +200		
Turcon® T10 For hydraulic and pneumatic For linear motion in lubricating and non-lubricating fluids High extrusion resistance Good chemical resistance Not for electrically conducting fluids BAM tested Carbon, graphite filled Color: Black	T10	NBR 70	N	-30 to +100	Steel Steel hardened Stainless steel	40
		NBR 70 Low temp.	T	-45 to +80		
		FKM 70	V	-10 to +200		
		EPDM 70	E**	-45 to +145		
Turcon® T29 For lubricating and non-lubricating fluids Good extrusion resistance Surface texture is not suitable for gas sealing Not for electrically conducting fluids Carbon fiber filled Color: Gray	T29	NBR 70	N	-30 to +100	Steel Steel hardened Cast iron Stainless steel	30
		NBR 70 Low temp.	T	-45 to +80		
		FKM 70	V	-10 to +200		
		EPDM 70	E**	-45 to +145		

Table continues on next page

Material, Applications, Properties	Code	O–Ring Material Shore A	Code	O-Ring Operating Temp.* °C	Mating Surface Material	MPa max. Dyna-mic
Turcon® T40 For lubricating and non-lubricating fluids High frequency and short strokes Water hydraulics Surface texture is not suitable for gas sealing Carbon fiber filled Color: Gray	T40	NBR 70	N	-30 to +100	Steel Steel hardened Cast iron Stainless steel Aluminum	25
		NBR 70 Low temp.	T	-45 to +80		
		FKM 70	V	-10 to +200		
		EPDM 70	E**	-45 to +145		
Turcon® T46 For lubricated hydraulics in linear motion High compressive strength High extrusion resistance Very good sliding and wear properties BAM tested Bronze filled Color: Light to dark brown, which may have variations in shading	T46	NBR 70	N	-30 to +100	Steel hardened Cast iron	50
		NBR 70 Low temp.	T	-45 to +80		
		FKM 70	V	-10 to +200		
Zurcon® Z51*** For mineral oil based fluids Very high abrasion and extrusion resistance For counter surface with rougher surface finish Limited chemical resistance Max. working temperature 110 °C Cast polyurethane Color: Yellow to light-brown	Z51	NBR 70	N	-30 to +100	Steel Steel hardened Cast iron Stainless steel Ceramic coating	60
		NBR 70 Low temp.	T	-45 to +80		
Zurcon® Z52*** For mineral oil based fluids Linear and slowly turning movements High abrasion resistance For counter surface with rougher surface finish Good extrusion resistance Limited chemical resistance Max. working temperature 110 °C Cast polyurethane Color: Turquoise	Z52	NBR 70	N	-30 to +100	Steel Steel hardened Cast iron Stainless steel Aluminum Bronze Ceramic coating	25
		NBR 70 Low temp.	T	-45 to +80		
Zurcon® Z80 For lubricating and non-lubricating fluids Water based fluids, air and gases Dry air pneumatics High abrasion and extrusion resistance For service in abrasive conditions and media with particles Good chemical resistance Limited temperature capability (-60 to +80 °C) UHMWPE (Ultra High Molecular Weight Polyethylene) Color: White to off-white	Z80	NBR 70	N	-30 to (+100)	Steel Steel hardened Stainless steel Aluminum Ceramic coating	35
		NBR 70 Low temp.	T	-45 to +80		
		EPDM 70	E**	-45 to (+145)		

* The O-Ring Operation Temperature is only valid in mineral hydraulic oil (except EPDM).
** Material not suitable for mineral oils.
*** Max. diameter 2300 mm.
BAM: Tested by "Bundesanstalt Materialprufung, Germany".
Highlighted materials are recommended.

Installation Recommendation

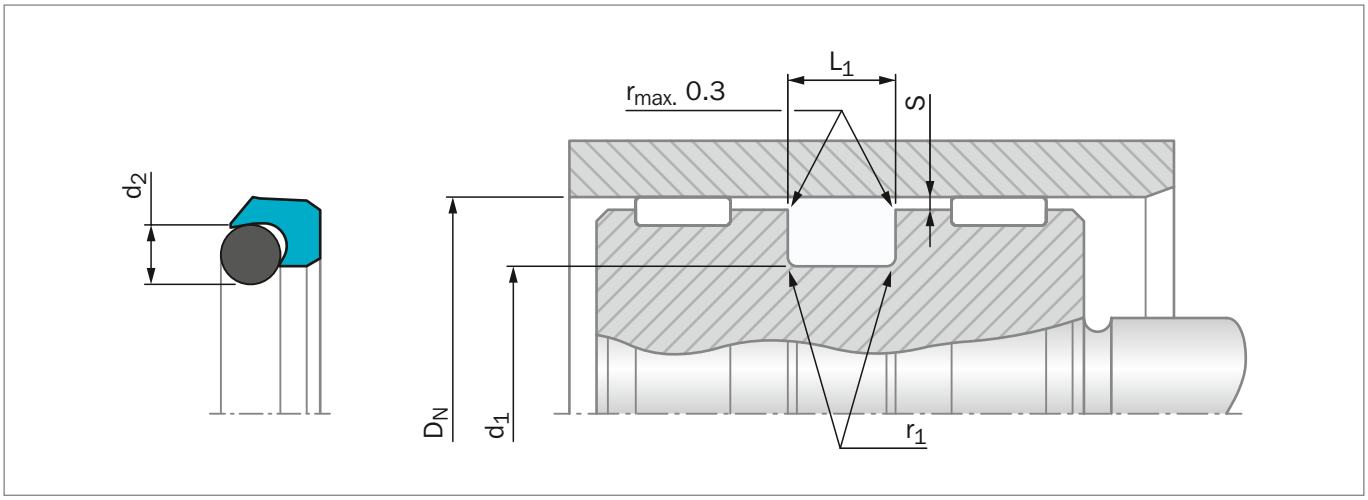

Figure 140: Installation Drawing

Table 131: Installation Dimensions - Standard Recommendations

Series No.	Bore Diameter D_N H9		Groove Diameter	Groove Width	Radius	Radial Clearance S_{max}			O-Ring Cross Section
	Standard Application	Available Range	d_1 h9	L_1 +0.2	r_{1max}	10 MPa	20 MPa	30 MPa	d_2
PEL10	14 - 24.9	10 - 100.0	D_N - 4.5	3.6	0.4	0.40	0.25	0.15	1.78
PEL20	25 - 45.9	16 - 200.0	D_N - 6.2	4.8	0.6	0.40	0.25	0.20	2.62
PEL30	46 - 124.9	28 - 400.0	D_N - 9.4	7.1	0.8	0.50	0.30	0.20	3.53
PEL40	125 - 399.9	45 - 650.0	D_N - 12.2	9.5	0.8	0.60	0.35	0.25	5.33
PEL50	400 - 649.9	125 - 999.9	D_N - 15.9	12.2	0.8	0.70	0.50	0.30	7.00
PEL60	650 - 999.9	400 - 999.9	D_N - 19.0	15.0	0.8	1.00	0.70	0.60	8.40
PEL6X	1000 - 2700		D_N - 19.0	15.0	0.8	1.00	0.70	0.60	8.40

* At pressures > **40 MPa** use diameter tolerance H8/f8 (bore/piston) in the area behind seal or consult your local Trelleborg Sealing Solutions marketing company for alternative material or profiles.
Slydring® / Wear Rings are not applicable at very small radial clearances please consult the Slydring® catalog.
For minimum diameter installation in closed grooves see Table 89 page 267

ORDERING EXAMPLE

Turcon® VL Seal® complete with O-Ring, standard application:

Series:	PEL30 from Table 131
Bore Diameter:	D_N = 80.0 mm
TSS Part No.:	PEL300800 from Table 132

Select the material from Table 130. The corresponding code numbers are appended to the TSS Part No. Together these form the TSS Article Number. The TSS Article Number for all intermediate sizes can be determined by following the example:

TSS Article No. PEL3 0 0800 - M12 N

- Series No. — PEL3
- Type (Standard)*** — 0
- Bore Diameter x 10** — 0800
- Quality Index (Standard) — -
- Material Code (Seal Ring) — M12
- Material Code (O-Ring) — N

** For diameters $D_N \geq 1000.0$ mm multiply only by factor 1.
Example: PEL6X for diameter D_N = 1200.0 mm
TSS Article No.: PEL6**X1200** - M12N

*** Use suffix "N" for seals with radial notches, for diameter $D_N < 1000$ mm. (Radial notches for diameter $D_N \geq 1000$ mm special part number is required).

Table 132: Installation Dimensions / Part No.

Bore Dia. D_N H9	Groove Dia. d_1 h9	Groove Width L_1 +0.2	TSS Part No.	O-Ring Dimensions
10.0	**5.5**	**3.6**	**PEL100100**	**4.80 x 1.80**
11.0	6.5	3.6	PEL100110	6.07 x 1.78
12.0	**7.5**	**3.6**	**PEL100120**	**7.10 x 1.80**
14.0	9.5	3.6	PEL100140	8.75 x 1.80
16.0	**11.5**	**3.6**	**PEL100160**	**11.20 x 1.80**
16.0	**9.8**	**4.8**	**PEL200160**	**9.19 x 2.62**
18.0	13.5	3.6	PEL100180	13.20 x 1.80
18.0	11.8	4.8	PEL200180	10.77 x 2.62
20.0	15.5	3.6	PEL100200	14.00 x 1.78
20.0	13.8	4.8	PEL200200	12.37 x 2.62
22.0	17.5	3.6	PEL100220	17.17 x 1.78
22.0	15.8	4.8	PEL200220	14.50 x 2.65
25.0	20.5	3.6	PEL100250	20.35 x 1.78
25.0	18.8	4.8	PEL200250	18.00 x 2.65
28.0	21.8	4.8	PEL200280	20.29 x 2.62
28.0	18.6	7.1	PEL300280	17.04 x 3.53
30.0	25.5	3.6	PEL100300	25.12 x 1.78
30.0	23.8	4.8	PEL200300	23.47 x 2.62
32.0	**27.5**	**3.6**	**PEL100320**	**26.70 x 1.78**
32.0	**25.8**	**4.8**	**PEL200320**	**25.07 x 2.62**
32.0	**22.6**	**7.1**	**PEL300320**	**21.82 x 3.53**
35.0	28.8	4.8	PEL200350	28.24 x 2.62
40.0	**35.5**	**3.6**	**PEL100400**	**34.65 x 1.78**
40.0	**33.8**	**4.8**	**PEL200400**	**32.99 x 2.62**
40.0	**30.6**	**7.1**	**PEL300400**	**29.75 x 3.53**
42.0	35.8	4.8	PEL200420	34.59 x 2.62
45.0	38.8	4.8	PEL200450	37.77 x 2.62
45.0	32.8	9.5	PEL400450	31.12 x 5.33
48.0	41.8	4.8	PEL200480	40.94 x 2.62
50.0	**43.8**	**4.8**	**PEL200500**	**42.52 x 2.62**
50.0	**40.6**	**7.1**	**PEL300500**	**40.87 x 3.53**
50.0	**37.8**	**9.5**	**PEL400500**	**37.47 x 5.33**
52.0	45.8	4.8	PEL200520	45.69 x 2.62
55.0	48.8	4.8	PEL200550	48.90 x 2.62
60.0	50.6	7.1	PEL300600	50.39 x 3.53
63.0	56.8	4.8	PEL200630	56.82 x 2.62
63.0	53.6	7.1	PEL300630	53.57 x 3.53
63.0	50.8	9.5	PEL400630	50.17 x 5.33
65.0	55.6	7.1	PEL300650	53.57 x 3.53
70.0	63.8	4.8	PEL200700	63.17 x 2.62

Bore Dia. D_N H9	Groove Dia. d_1 h9	Groove Width L_1 +0.2	TSS Part No.	O-Ring Dimensions
70.0	60.6	7.1	PEL300700	59.92 x 3.53
75.0	65.6	7.1	PEL300750	63.09 x 3.53
80.0	**70.6**	**7.1**	**PEL300800**	**69.44 x 3.53**
80.0	**67.8**	**9.5**	**PEL400800**	**66.04 x 5.33**
85.0	75.6	7.1	PEL300850	75.79 x 3.53
85.0	72.8	9.5	PEL400850	72.39 x 5.33
90.0	80.6	7.1	PEL300900	78.97 x 3.53
90.0	77.8	9.5	PEL400900	75.57 x 5.33
95.0	85.6	7.1	PEL300950	85.32 x 3.53
95.0	82.8	9.5	PEL400950	81.92 x 5.33
100.0	**90.6**	**7.1**	**PEL301000**	**88.49 x 3.53**
100.0	**87.8**	**9.5**	**PEL401000**	**88.27 x 5.33**
105.0	95.6	7.1	PEL301050	94.84 x 3.53
105.0	92.8	9.5	PEL401050	91.44 x 5.33
106.0	96.6	7.1	PEL301060	94.84 x 3.53
110.0	100.6	7.1	PEL301100	101.19 x 3.53
110.0	97.8	9.5	PEL401100	97.79 x 5.33
115.0	105.6	7.1	PEL301150	104.37 x 3.53
115.0	102.8	9.5	PEL401150	100.97 x 5.33
120.0	110.6	7.1	PEL301200	110.72 x 3.53
120.0	107.8	9.5	PEL401200	107.32 x 5.33
125.0	**115.6**	**7.1**	**PEL301250**	**113.89 x 3.53**
125.0	**112.8**	**9.5**	**PEL401250**	**110.49 x 5.33**
125.0	**109.1**	**12.2**	**PEL501250**	**107.35 x 7.00**
130.0	120.6	7.1	PEL301300	120.24 x 3.53
130.0	117.8	9.5	PEL401300	116.84 x 5.33
135.0	122.8	9.5	PEL401350	123.19 x 5.33
140.0	127.8	9.5	PEL401400	126.37 x 5.33
140.0	124.1	12.2	PEL501400	123.19 x 7.00
145.0	132.8	9.5	PEL401450	132.72 x 5.33
150.0	137.8	9.5	PEL401500	135.89 x 5.33
155.0	145.6	7.1	PEL301550	145.64 x 3.53
160.0	**150.6**	**7.1**	**PEL301600**	**148.82 x 3.53**
160.0	**147.8**	**9.5**	**PEL401600**	**145.42 x 5.33**
160.0	**144.1**	**12.2**	**PEL501600**	**142.24 x 7.00**
165.0	155.6	7.1	PEL301650	151.99 x 3.53
165.0	152.8	9.5	PEL401650	151.77 x 5.33
170.0	157.8	9.5	PEL401700	158.12 x 5.33
175.0	165.6	7.1	PEL301750	164.69 x 3.53
180.0	170.6	7.1	PEL301800	171.04 x 3.53

Bore Dia. D_N H9	Groove Dia. d_1 h9	Groove Width L_1 +0.2	TSS Part No.	O-Ring Dimensions
180.0	167.8	9.5	PEL401800	164.47 x 5.33
180.0	164.1	12.2	PEL501800	164.47 x 7.00
190.0	180.6	7.1	PEL301900	177.39 x 3.53
190.0	177.8	9.5	PEL401900	177.17 x 5.33
200.0	**190.6**	**7.1**	**PEL302000**	**190.09 x 3.53**
200.0	**187.8**	**9.5**	**PEL402000**	**189.87 x 5.33**
200.0	**184.1**	**12.2**	**PEL502000**	**183.52 x 7.00**
205.0	192.8	9.5	PEL402050	189.87 x 5.33
210.0	197.8	9.5	PEL402100	196.22 x 5.33
220.0	210.6	7.1	PEL302200	209.14 x 3.53
220.0	207.8	9.5	PEL402200	208.92 x 5.33
220.0	204.1	12.2	PEL502200	202.57 x 7.00
230.0	217.8	9.5	PEL402300	215.27 x 5.33
240.0	227.8	9.5	PEL402400	227.97 x 5.33
250.0	**237.8**	**9.5**	**PEL402500**	**234.32 x 5.33**
250.0	**234.1**	**12.2**	**PEL502500**	**227.97 x 7.00**
300.0	284.1	12.2	PEL503000	278.77 x 7.00
306.0	293.8	9.5	PEL403060	291.47 x 5.33
320.0	**307.8**	**9.5**	**PEL403200**	**304.17 x 5.33**
320.0	**304.1**	**12.2**	**PEL503200**	**304.17 x 7.00**
345.0	332.8	9.5	PEL403450	329.57 x 5.33
350.0	334.1	12.2	PEL503500	329.57 x 7.00
400.0	**384.1**	**12.2**	**PEL504000**	**380.37 x 7.00**
400.0	**381.0**	**15.0**	**PEL604000**	**379.00 x 8.40**
440.0	424.1	12.2	PEL504400	430.66 x 7.00
450.0	431.0	15.0	PEL604500	429.00 x 8.40
500.0	**484.1**	**12.2**	**PEL505000**	**481.38 x 7.00**
500.0	**481.0**	**15.0**	**PEL605000**	**479.00 x 8.40**
520.0	507.8	9.5	PEL405200	506.78 x 5.33
540.0	524.1	12.2	PEL505400	532.26 x 7.00
540.0	521.0	15.0	PEL605400	519.00 x 8.40
600.0	584.1	12.2	PEL506000	582.68 x 7.00
600.0	581.0	15.0	PEL606000	579.00 x 8.40
650.0	634.1	12.2	PEL506500	633.48 x 7.00
650.0	631.0	15.0	PEL606500	629.00 x 8.40
700.0	684.1	12.2	PEL507000	658.88 x 7.00
700.0	681.0	15.0	PEL607000	679.00 x 8.40
800.0	784.1	12.2	PEL508000	782.00 x 7.00
800.0	781.0	15.0	PEL608000	779.00 x 8.40
860.0	844.1	12.2	PEL508600	842.00 x 7.00

Bore Dia. D_N H9	Groove Dia. d_1 h9	Groove Width L_1 +0.2	TSS Part No.	O-Ring Dimensions
900.0	884.1	12.2	PEL509000	882.00 x 7.00
900.0	881.0	15.0	PEL609000	879.00 x 8.40
920.0	904.1	12.2	PEL509200	902.00 x 7.00
1000.0	981.0	15.0	PEL6X1000	979.00 x 8.40
1200.0	1181.0	15.0	PEL6X1200	1179.00 x 8.40
1500.0	1481.0	15.0	PEL6X1500	1479.00 x 8.40
2000.0	1981.0	15.0	PEL6X2000	1979.00 x 8.40
2700.0	2681.0	15.0	PEL6X2700	2679.00 x 8.40

The bore diameters in **bold** type are in accordance with the recommendations of ISO 3320.

Other dimensions and all intermediate sizes up to 2700 mm diameter including imperial (inch) sizes can be supplied.

Zurcon® U-Cup PUA

Single-acting

Asymmetric, Single Lip

For O-Ring Grooves

Material:
Zurcon®

Piston U-Cup PUA

Description

The U-Cup is a single-acting piston seal out of injection molded polyurethane. It is provided with a robust dynamic sealing lip and a wide contact area of the static lip, which guaranties an effective positioning in the groove.

The profile is suitable for pressures up to 40 MPa provided that the extrusion gap is adapted to the pressure level. Thanks to the elasticity of the polyurethane material the U-Cup can easily be installed in closed grooves.

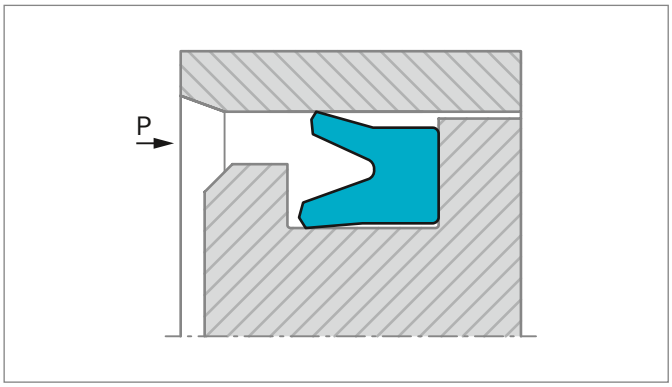

Figure 141: Piston U-Cup Type PUA

ADVANTAGES

- Simple groove design
- High abrasion resistance
- Long service life
- Effective sealing effect even with non excellent mating surface finish

APPLICATION EXAMPLES

The U-Cup is the recommended sealing element for single acting pistons of hydraulic components such as:

- Presses
- Lift platforms
- Aftermarket

OPERATING CONDITIONS

Pressure:	Up to 40 MPa
Speed:	Up to 0.5 m/s
Temperature:	from -35 °C to +110 °C
Media:	Mineral oil based hydraulic fluids
Clearance:	From Table 133 the maximum value of the radial clearance S_{max} can be selected for dimensioning the piston. The values indicated in this table must be reduced by 30% when temperature exceeds 80 °C.

Table 133: Clearance

Operating Pressure MPa	Radial Clearance S_{max}	
	d_N < 60 mm	d_N > 60 mm
5	0.40	0.50
10	0.30	0.40
20	0.20	0.30
30	0.15	0.20
40	0.10	0.15

IMPORTANT NOTE

The above data are maximum values and cannot be used at the same time, e.g. the maximum operating speed depends on material type, pressure, temperature and gap value. Temperature range also depends on media.

MATERIALS

Standard Material:
For hydraulic components in mineral oils or medium with good lubricating performance, polyurethane 93 Shore A

Zurcon® Z20

Color: turquoise

Installation Recommendation

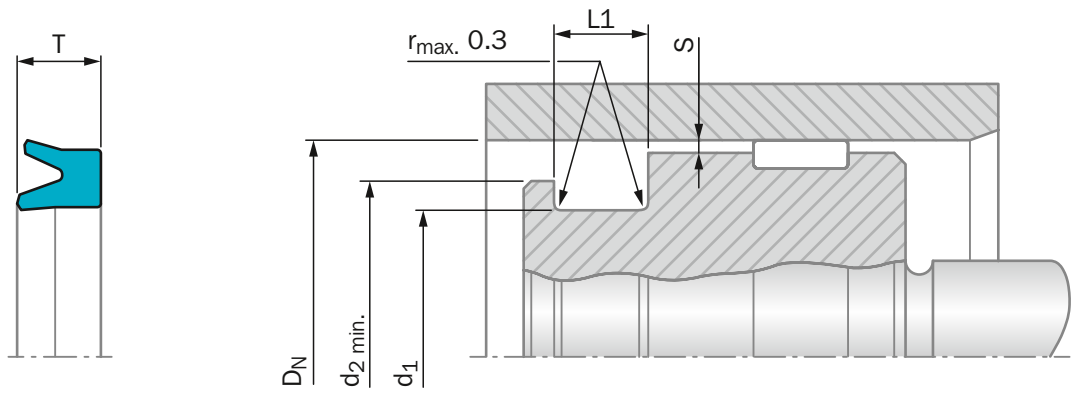

Figure 142: Installation Drawing

* Dimensions "S" see Table 133

ORDERING EXAMPLE

Bore Diameter:	D_N = 80 mm
Groove Diameter:	d_1 = 60 mm
Groove Width:	L1 = 13 mm
TSS Part No.:	PUA000800 from Table 134
Material Code:	Z20

TSS Article No. PUA 0 00800 - Z20

- TSS Series No. — PUA
- Execution Code — 0
- Bore Diameter x 10 — 00800
- Quality Index (Standard) — -
- Material Code — Z20

Table 134: Installation Dimensions / TSS Part No.

Bore Diameter	Groove Diameter	Seal Width	Groove Width	Fitting Diameter	TSS Part No.
D_N H9	d_1 h9	T	L1 +0.2	d_2 min	
14.0	8.0	6.3	6.8	11.0	PUA000140
16.0	8.0	6.0	5.5	13.0	PUA300160
20.0	12.0	6.5	7.5	15.0	PUA000200
22.0	12.0	8.0	9.0	16.0	PUA000220
25.0	15.0	8.0	9.0	19.0	PUA000250
30.0	20.0	8.0	9.0	24.0	PUA100300
30.0	22.0	6.5	7.0	26.0	PUA400300
32.0	22.0	8.0	9.0	26.0	PUA000320
32.0	26.0	5.0	6.0	28.0	PUA200320
35.0	25.0	8.0	9.0	29.0	PUA100350
40.0	30.0	6.5	7.5	34.0	PUA200400
40.0	30.0	10.0	11.0	34.0	PUA500400

Bore Diameter	Groove Diameter	Seal Width	Groove Width	Fitting Diameter	TSS Part No.
D_N H9	d_1 h9	T	L1 +0.2	d_2 min	
40.0	32.0	5.5	6.5	36.0	PUA300400
45.0	30.0	10.0	11.0	35.0	PUA100450
50.0	40.0	10.0	11.0	44.0	PUA400500
50.0	42.0	5.5	6.0	45.0	PUA900500
52.0	42.0	5.7	6.5	46.0	PUA000520
55.0	40.0	10.0	11.0	45.0	PUA000550
60.0	50.0	7.0	8.0	54.0	PUA000600
60.0	50.0	10.0	11.0	54.0	PUA600600
63.0	48.0	12.0	13.0	53.0	PUA000630
63.0	53.0	7.0	8.0	57.0	PUA200630
65.0	50.0	10.0	11.0	55.0	PUA100650
65.0	55.0	10.0	11.0	59.0	PUA400650
70.0	60.0	7.0	8.0	64.0	PUA100700
70.0	60.0	12.0	13.0	64.0	PUA700700
75.0	65.0	7.0	8.0	69.0	PUA500750
75.0	65.0	10.0	11.0	69.0	PUA400750
80.0	60.0	12.0	13.0	65.0	PUA000800
80.0	68.0	8.5	9.5	72.0	PUA300800
80.0	70.0	12.0	13.0	74.0	PUA700800
85.0	70.0	12.0	13.0	75.0	PUA300850
90.0	75.0	12.0	13.0	80.0	PUA300900
90.0	80.0	10.0	11.0	84.0	PUA000900
95.0	75.0	13.5	14.5	80.0	PUA100950
100.0	80.0	12.0	13.0	85.0	PUA001000
100.0	85.0	12.0	13.0	90.0	PUA401000
110.0	95.0	12.0	13.0	100.0	PUA101100
110.0	100.0	7.0	8.0	104.0	PUA201100
115.0	100.0	12.0	13.0	105.0	PUA001150
120.0	100.0	12.0	13.0	105.0	PUA001200
125.0	100.0	15.0	16.0	105.0	PUA201250
125.0	105.0	12.0	13.0	110.0	PUA301250
125.0	110.0	10.0	11.0	115.0	PUA101250
130.0	110.0	15.0	16.0	115.0	PUA001300
140.0	120.0	12.0	13.0	125.0	PUA001400
150.0	130.0	15.0	16.0	135.0	PUA101500
160.0	140.0	11.5	12.5	145.0	PUA001600
180.0	160.0	11.5	12.5	165.0	PUA201800
200.0	175.0	15.0	16.0	180.0	PUA102000
250.0	225.0	15.0	16.0	230.0	PUA102500

Zurcon® Wynseal

Double-acting

Rubber-energized plastic-faced seal

High static and dynamic sealing effect

Material:
Zurcon® + NBR

Zurcon® Wynseal

Description

The Zurcon® Wynseal is a double-acting seal consisting of a special polyurethane seal ring and an O-Ring as energizing element (Figure 143).

The particular characteristic of the seal is the special design of the seal edge profile. Two external seal edges act as primary seal for pressures from both sides and prevent any build-up of hydrodynamic pressure over the seal profile and the risk of the blow-by effect. The central back-up and sealing bulge increases the sealing effect*. Grooves are provided on both sides on the plane surfaces to provide activation of the energizing O-Ring. These ensure direct pressure loading of the seal under all operating conditions.

Since the installation groove is identical to that for the Turcon® Glyd Ring® , the seal is ideal for the standardisation of cylinder construction if, efficient and low cost seal elements are demanded in large quantities and, the cylinder can be adapted to meet different operating conditions. It has to be taken into consideration that in this case the gap dimension has to be checked!

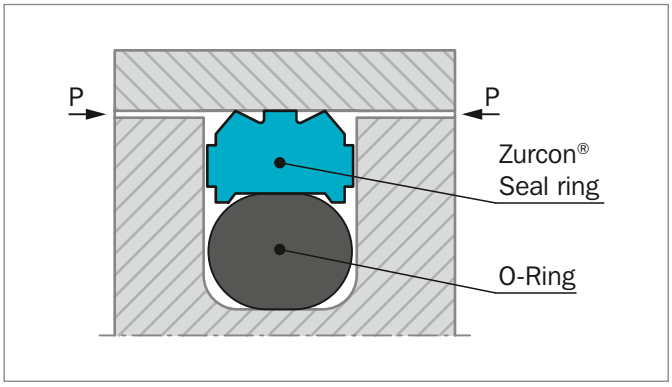

Figure 143: Zurcon® Wynseal

ADVANTAGES

- High static and dynamic sealing effect
- High abrasion resistance
- Simple groove design, one-piece piston possible
- Suitable for grooves to ISO 7425, Part 1.

* Only from PW42 and the following Series No.; PW40 and PW41 without sealing and supporting bulge.

APPLICATION EXAMPLES

The Zurcon® Wynseal is the recommended element for double acting pistons of hydraulic components in various sectors such as:

- Machine tools
- Forklifts and handling machinery
- Agriculture
- Industrial hydraulic light to medium duty

OPERATING CONDITIONS

Pressure:	Up to 25 MPa (Z20N)
Speed:	Up to 0.5 m/s
Temperature:	-35 °C to +110 °C
Media:	Mineral oil-based hydraulic fluids

IMPORTANT NOTE

The above data are maximum values and cannot be used at the same time, e.g. the maximum operating speed depends on material type, pressure, temperature and gap value. Temperature range also depends on media.

MATERIALS

Wynseal:	Zurcon® Z20, 93 Shore A
O-Ring:	NBR 70 Shore A
Set reference:	Z20N

Installation Recommendation

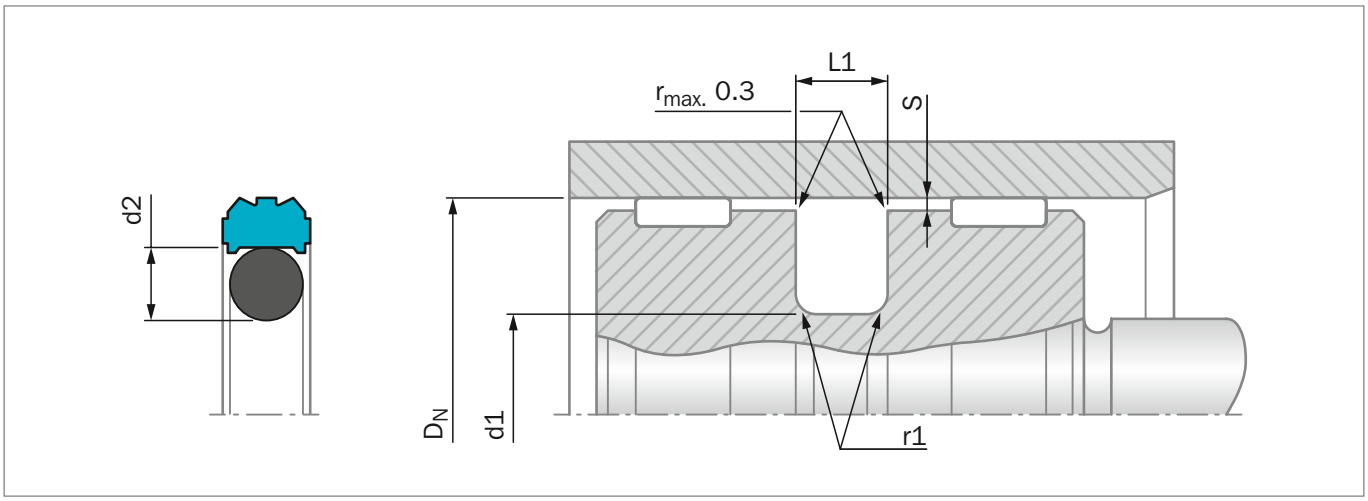

Figure 144: Installation Drawing

Table 135: Installation Dimensions

Series No.	Groove Diameter	Groove Width	Radius	Radial Clearance	O-Ring Cross Section
	d1 h9	**L1** +0.2	**r1**	**S_{max}**	**d2**
PW40	DN - 4,9	2.2	0.4	0.20	1.78
PW41	DN - 7.5	3.2	0.6	0.25	2.62
PW42	DN - 11.0	4.2	1.0	0.25	3.53
PW43	DN - 15.5	6.3	1.3	0.30	5.33
PW44	DN - 21.0	8.1	1.8	0.30	7.00

ORDERING EXAMPLE

Wynseal for ISO groove

Bore Diameter:	D_N = 63 mm
Series No.:	PW43
TSS Part No.:	PW4300630 from Table 136
Material Code:	Z20
O-Ring Material Code:	N
Set Code:	Z20N

TSS Article No. PW43 0 0630 - Z20 N

- TSS Series No. — PW43
- Type (Standard) — 0
- Bore Diameter x 10 — 0630
- Quality Index (Standard) — -
- Material Code (Seal Ring) — Z20
- Material Code (O-Ring) — N

Table 136: Installation Dimensions / TSS Part No.

Bore Diameter	Groove Diameter	Groove Width	TSS Part No.
D_N	d1	L1	
H9	h9	+0.2	
12.0	7.1	2.2	PW4000120
12.0	4.5	3.2	PW4100120
16.0	**8.5**	**3.2**	**PW4100160**
20.0	**12.5**	**3.2**	**PW4100200**
22.0	14.5	3.2	PW4100220
24.0	16.5	3.2	PW4100240
25.0	**17.5**	**3.2**	**PW4100250**
25.0	**14.0**	**4.2**	**PW4200250**
30.0	22.5	3.2	PW4100300
32.0	**24.5**	**3.2**	**PW4100320**
32.0	**21.0**	**4.2**	**PW4200320**
35.0	27.5	3.2	PW4100350
35.0	24.0	4.2	PW4200350
36.0	28.5	3.2	PW4100360
38.0	30.5	3.2	PW4100380
40.0	**32.5**	**3.2**	**PW4100400**
40.0	**29.0**	**4.2**	**PW4200400**
42.0	31.0	4.2	PW4200420
45.0	34.0	4.2	PW4200450
45.0	29.5	6.3	PW4300450
49.0	38.0	4.2	PW4200490
50.0	**39.0**	**4.2**	**PW4200500**
50.0	34.5	6.3	PW4300500
52.0	36.5	6.3	PW4300520
55.0	44.0	4.2	PW4200550
55.0	39.5	6.3	PW4300550
56.0	45.0	4.2	PW4200560
57.0	46.0	4.2	PW4200570
60.0	49.0	4.2	PW4200600
60.0	44.5	6.3	PW4300600
63.0	**52.0**	**4.2**	**PW4200630**
63.0	**47.5**	**6.3**	**PW4300630**
65.0	54.0	4.2	PW4200650
65.0	49.5	6.3	PW4300650
70.0	59.0	4.2	PW4200700
70.0	54.5	6.3	PW4300700
75.0	64.0	4.2	PW4200750
75.0	59.5	6.3	PW4300750
80.0	**69.0**	**4.2**	**PW4200800**
80.0	**64.5**	**6.3**	**PW4300800**

Bore Diameter	Groove Diameter	Groove Width	TSS Part No.
D_N	d1	L1	
H9	h9	+0.2	
85.0	69.5	6.3	PW4300850
90.0	74.5	6.3	PW4300900
95.0	79.5	6.3	PW4300950
100.0	**84.5**	**6.3**	**PW4301000**
105.0	89.5	6.3	PW4301050
110.0	94.5	6.3	PW4301100
115.0	99.5	6.3	PW4301150
120.0	104.5	6.3	PW4301200
125.0	**109.5**	**6.3**	**PW4301250**
125.0	**104.0**	**8.1**	**PW4401250**
130.0	114.5	6.3	PW4301300
135.0	114.0	8.1	PW4401350
140.0	119.0	8.1	PW4401400
150.0	129.0	8.1	PW4401500
160.0	**139.0**	**8.1**	**PW4401600**
170.0	149.0	8.1	PW4401700
180.0	159.0	8.1	PW4401800
190.0	169.0	8.1	PW4401900
200.0	**179.0**	**8.1**	**PW4402000**
210.0	189.0	8.1	PW4402100
220.0	199.0	8.1	PW4402200
230.0	209.0	8.1	PW4402300
240.0	219.0	8.1	PW4402400
250.0	**229.0**	**8.1**	**PW4402500**
300.0	279.0	8.1	PW4403000

The sizes printed in **bold** type are suitable for grooves to ISO 7425-1.
Additional dimensions can be delivered on request.

Zurcon® Wynseal M

Double-acting

Rubber-energized plastic-faced seal

Material:
Turcon®, Zurcon® and Elastomer

Zurcon® Wynseal M

Description

Zurcon® Wynseal M is a modified machined version, of the Zurcon® Wynseal design.

Zurcon® Wynseal M is a double-acting seal consisting of a Zurcon® or Turcon® seal ring and an O-Ring as energizing element – Figure 145.

The seal is designed with a seal edge profile. Two seal edges act as primary seal for pressures from both sides and prevent build-up of hydrodynamic pressure over the seal profile and the risk of blow-by effect. The central sealing and supporting rib increases the sealing effect*.

Radial notches are provided on both sides to provide activation of the energizing O-Ring. These ensure direct pressure loading of the seal under all operating conditions.

Installation groove is identical to that of Turcon® Glyd Ring® .

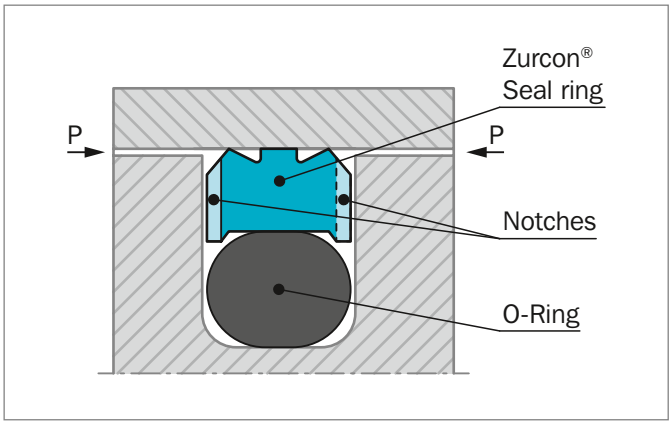

Figure 145: Zurcon® Wynseal M

* Only from PW62 and the following Series No.; PW60 is without seal edge profile and PW61 is without supporting rib.

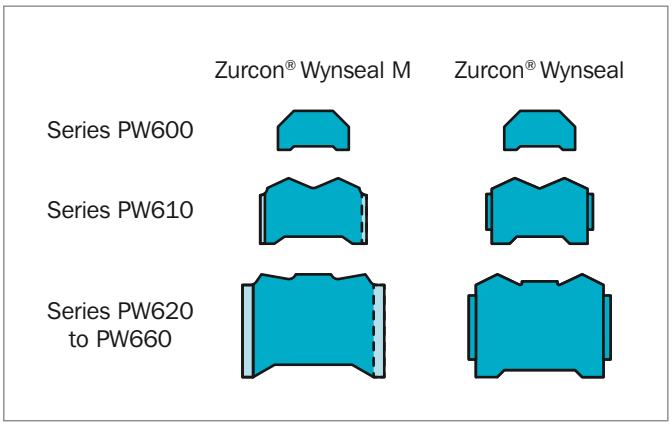

Figure 146: Zurcon® Wynseal M and Zurcon® Wynseal profiles

ADVANTAGES

- High static and dynamic sealing effect
- High abrasion resistance (Zurcon® materials)
- Simple groove design, one-piece piston possible
- Diameter range - from 8 to 2700 mm
- Grooves according to ISO 7425-1
- Low friction
- Higher temperature (Turcon® materials)
- Higher pressure
- High chemical resistance

APPLICATION EXAMPLES

Zurcon® Wynseal M is used as double-acting piston seal for hydraulic components in applications such as:

- Machine tools
- Forklifts and handling machinery
- Agriculture
- Industrial hydraulics light to medium duty

OPERATING CONDITIONS

Pressure:	Up to 50 MPa
Speed:	Up to 10 m/s
Temperature:	-45 °C to +200 °C* depending on seal and O-Ring material
Media:	Mineral oil-based hydraulic fluids, flame retardant hydraulic fluids, environmentally friendly hydraulic fluids (bio-oils), phosphate ester, water and others, depending on temperature, seal and O-Ring material compatibility - see Table 137.
Clearance:	The maximum permissible radial clearance S_{max} is shown in Table 138, as a function of the operating pressure and functional diameter.

IMPORTANT NOTE

The above data are maximum values and cannot be used at the same time, e.g. the maximum operating speed depends on material type, pressure, temperature and gap value. Temperature range also depends on media.

* In the case of unpressurized piston applications in temperatures below 0 °C please contact your local Trelleborg Sealing Solutions marketing company for more information!

INSTALLATION INSTRUCTIONS

Wynseal® M is installed according to information on page 262 to page 266.

Closed groove installation according to dimensions in Table 88 page 266.

RECOMMENDED MATERIALS

The following material combinations have proven effective for hydraulic applications:

Turcon® Wynseal M in Zurcon® Z52
For light to medium hydraulic applications with linear movements in mineral oils and other media with good lubrication:

O-Ring:	NBR 70 Shore A	N
Set code:	Z52N	

Turcon® Wynseal M Turcon® M12
All round material for light to heavy hydraulic applications linear, short stroke or helical movements in mineral oils, flame retardant hydraulic fluids, phosphate ester, bio-oils or fluids having low lubricating properties:

O-Ring:	NBR 70 Shore A	N
	FKM 70 Shore A	V
Set code:	M12N or M12V	

For specific applications, all Turcon® materials are available.

Other material combinations are listed in Table 137.

Table 137: Turcon® and Zurcon® Materials for Zurcon® Wynseal M

Material, Applications, Properties	Code	O-Ring Material Shore A	Code	O-Ring Operating Temp.* °C	Mating Surface Material	MPa max. Dynamic
Turcon® M12 First material choice for seals in linear motion Overall improved properties For new constructions and updating For all commonly applied hydraulic fluids including fluids with low lubrication performance Lowest friction and best sliding properties Lowest wear on seals Improved absorption of abrasive contaminants Low wear or abrasion of counter surface BAM tested Mineral fiber and Additives filled Color: Dark gray	M12	NBR 70	N	-30 to +100	Steel Steel hardened Cast iron Stainless steel Titanium	35
		NBR 70 Low temp.	T	-45 to +80		
		FKM 70	V	-10 to +200		
Turcon® T08 For lubricating fluids and linear motion Very high compressive strength and extrusion resistance Hard counter surfaces is recommended Bronze filled Color: Light to dark brown, which may have variations in shading	T08	NBR 70	N	-30 to +100	Steel hardened Cast iron	50
		NBR 70 Low temp.	T	-45 to +80		
		FKM 70	V	-10 to +200		
Turcon® T40 For lubricating and non-lubricating fluids High frequency and short strokes Water hydraulics Surface texture is not suitable for gas sealing Carbon fiber filled Color: Gray	T40	NBR 70	N	-30 to +100	Steel Steel hardened Cast iron Stainless steel Aluminum	25
		NBR 70 Low temp.	T	-45 to +80		
		FKM 70	V	-10 to +200		
		EPDM 70	E**	-45 to +145		
Turcon® T46 For lubricated hydraulics in linear motion High compressive strength High extrusion resistance Very good sliding and wear properties BAM tested Bronze filled Color: Light to dark brown, which may have variations in shading	T46	NBR 70	N	-30 to +100	Steel hardened Cast iron	35
		NBR 70 Low temp.	T	-45 to +80		
		FKM 70	V	-10 to +200		

Table continues on next page

Material, Applications, Properties	Code	O-Ring Material Shore A	Code	O-Ring Operating Temp.* °C	Mating Surface Material	MPa max. Dyna-mic
Zurcon® Z51* ** For mineral oil based fluids Very high abrasion and extrusion resistance For counter surface with rougher surface finish Limited chemical resistance Max. working temperature 110 °C Cast polyurethane Color: Yellow to light-brown	Z51	NBR 70	N	-30 to +100	Steel Steel hardened Cast iron Stainless steel Ceramic coating	45
		NBR 70 Low temp.	T	-45 to +80		
Zurcon® Z52* ** For mineral oil based fluids High abrasion resistance For counter surface with rougher surface finish Good extrusion resistance Limited chemical resistance Max. working temperature 110 °C Cast polyurethane Color: Turquoise	Z52	NBR 70	N	-30 to +100	Steel Steel hardened Cast iron Stainless steel Ceramic coating	25
		NBR 70 Low temp.	T	-45 to +80		
Zurcon® Z80 For lubricating and non-lubricating fluids Water based fluids, air and gases Dry air pneumatics High abrasion and extrusion resistance For service in abrasive conditions and media with particles Good chemical resistance Limited temperature capability (-60 to +80 °C) UHMWPE (Ultra High Molecular Weight Polyethylene) Color: White to off-white	Z80	NBR 70	N	-30 to (+100)	Steel Steel hardened Stainless steel Aluminum Bronze Ceramic coating	30
		NBR 70 Low temp.	T	-45 to +80		
		EPDM 70	E**	-45 to (+145)		

* The O-Ring Operation Temperature is only valid in mineral hydraulic oil (except EPDM).
** Material not suitable for mineral oils.
*** Max. diameter 2300 mm.
BAM: Tested by "Bundesanstalt Materialprufung, Germany".
Highlighted materials are recommended.

Installation Recommendation

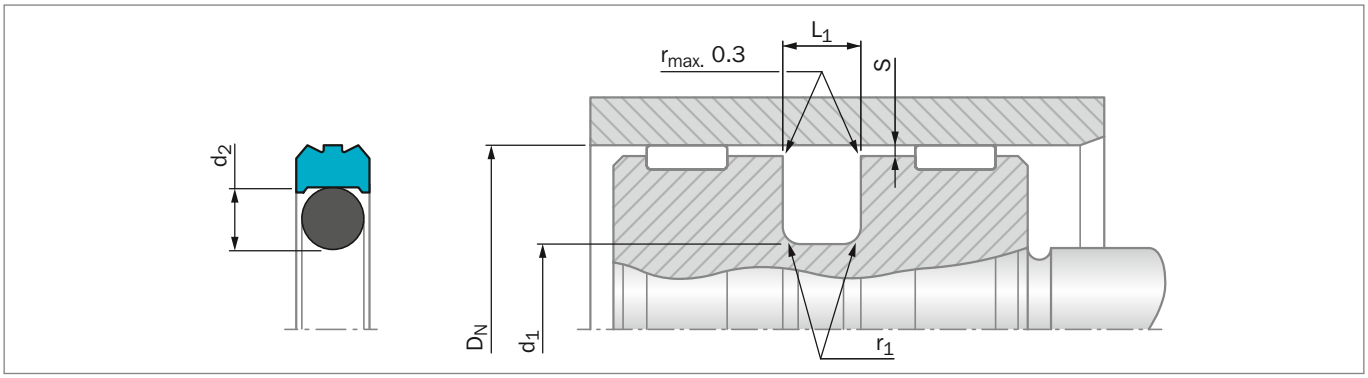

Figure 147: Installation Drawing

Table 138: Installation Dimensions – Standard Recommendations

Series No.	Bore Diameter D_N H9		Groove Diameter	Groove Width	Radius	Radial Clearance S_{max}*			O-Ring Cross Section
	Standard Application	Available Range	d_1 h9	L_1 +0.2/-0	$r_{1\,max}$	10 MPa	20 MPa	40 MPa	d_2
PW600	8 - 14.9	8 - 140	D_N - 4.9	2.20	0.4	0.40	0.30	0.20	1.78
PW610	15 - 39.9	12 - 140	D_N - 7.5	3.20	0.6	0.60	0.50	0.30	2.62
PW620	40 - 79.9	15 - 320	D_N - 11.0	4.20	1.0	0.70	0.50	0.30	3.53
PW630	80 - 132.9	40 - 400	D_N - 15.5	6.30	1.3	0.80	0.60	0.40	5.33
PW640	133 - 329.9	80 - 700	D_N - 21.0	8.10	1.8	0.80	0.60	0.40	7.00
PW680	330 - 669.9	133 - 999.9	D_N - 24.5	8.10	1.8	0.90	0.70	0.50	7.00
PW650	670 - 999.9	330 - 999.9	D_N - 28.0	9.50	2.5	1.00	0.80	0.60	8.40
PW65X	1000 - 1200	-	D_N - 28.0	9.50	2.5	1.00	0.80	0.60	8.40
PW660**	-	670 - 999.9	D_N - 38.0	13.80	3.0	1.20	0.90	0.70	12.00
PW66X**	1000 - 2700***		D_N - 38.0	13.80	3.0	1.20	0.90	0.70	12.00

* At pressures > **40 MPa** use diameter tolerance H8/f8 (bore/piston) in the area of the seal or consult your local Trelleborg Sealing Solutions marketing company for alternative material or profiles.
Slydring® / Wear Rings are not applicable at very small radial clearances please consult the Slydring® catalog.
** O-Rings with 12 mm cross section are delivered as special profile ring.
*** Z51 and Z52 max diamter 2300 mm.

ORDERING EXAMPLE

Zurcon® Wynseal M complete with O-Ring, standard application:

Series:	PW630 from Table 138
Bore Diameter:	D_N = 80.0 mm
TSS Part No.:	PW6300800 from Table 139

Select the material from Table 137. The corresponding code numbers are appended to the TSS Part No. Together these form the TSS Article Number. The TSS Article Number for all intermediate sizes can be determined by following the example:

TSS Article No. PW63 0 0800 - Z52 N

- Series No. — PW63
- Type (Standard) — 0
- Bore Diameter x 10**** — 0800
- Quality Index (Standard) — -
- Material Code (Seal Ring) — Z52
- Material Code (O-Ring) — N

**** For diameters $D_N \geq 1000.0$ mm multiply only by factor 1.
Example: PW66X for diameter D_N = 1200.0 mm
TSS Article No.: PW66X1200 - Z52

Table 139: Installation Dimensions / TSS Part No.

Bore Dia. D_N H9	Groove Dia. d_1 h9	Groove Width L_1 +0.2	TSS Part No.	O-Ring Dimensions
8.0	**3.1**	**2.2**	**PW6000080**	**2.90 x 1.78**
10.0	**5.1**	**2.2**	**PW6000100**	**4.80 x 1.80**
12.0	**7.1**	**2.2**	**PW6000120**	**6.70 x 1.80**
14.0	9.1	2.2	PW6000140	8.75 x 1.80
15.0	7.5	3.2	PW6100150	7.59 x 2.62
16.0	**11.1**	**2.2**	**PW6000160**	**10.82 x 1.78**
16.0	**8.5**	**3.2**	**PW6100160**	**7.59 x 2.62**
18.0	13.1	2.2	PW6000180	12.42 x 1.78
18.0	10.5	3.2	PW6100180	9.19 x 2.62
20.0	**15.1**	**2.2**	**PW6000200**	**14.00 x 1.78**
20.0	**12.5**	**3.2**	**PW6100200**	**12.37 x 2.62**
22.0	17.1	2.2	PW6000220	17.17 x 1.78
22.0	14.5	3.2	PW6100220	13.94 x 2.62
24.0	16.5	3.2	PW6100240	15.54 x 2.62
25.0	**20.1**	**2.2**	**PW6000250**	**18.77 x 1.78**
25.0	**17.5**	**3.2**	**PW6100250**	**17.12 x 2.62**
25.0	**14.0**	**4.2**	**PW6200250**	**13.87 x 3.53**
28.0	20.5	3.2	PW6100280	20.29 x 2.62
30.0	22.5	3.2	PW6100300	21.89 x 2.62
32.0	**27.1**	**2.2**	**PW6000320**	**26.70 x 1.78**
32.0	**24.5**	**3.2**	**PW6100320**	**23.47 x 2.62**
32.0	**21.0**	**4.2**	**PW6200320**	**20.22 x 3.53**
35.0	27.5	3.2	PW6100350	26.64 x 2.62
35.0	24.0	4.2	PW6200350	23.40 x 3.53
36.0	28.5	3.2	PW6100360	28.24 x 2.62
38.0	30.5	3.2	PW6100380	29.82 x 2.62
40.0	32.5	3.2	PW6100400	31.42 x 2.62
40.0	29.0	4.2	PW6200400	28.17 x 3.53
42.0	31.0	4.2	PW6200420	29.75 x 3.53
45.0	34.0	4.2	PW6200450	32.92 x 3.53
48.0	37.0	4.2	PW6200480	36.09 x 3.53
50.0	**42.5**	**3.2**	**PW6100500**	**40.94 x 2.62**
50.0	**39.0**	**4.2**	**PW6200500**	**37.70 x 3.53**
50.0	**34.5**	**6.3**	**PW6300500**	**32.69 x 5.33**
52.0	41.0	4.2	PW6200520	40.87 x 3.53
55.0	44.0	4.2	PW6200550	44.04 x 3.53
56.0	45.0	4.2	PW6200560	44.04 x 3.53
60.0	49.0	4.2	PW6200600	47.22 x 3.53
63.0	**52.0**	**4.2**	**PW6200630**	**50.39 x 3.53**
63.0	**47.5**	**6.3**	**PW6300630**	**46.99 x 5.33**
65.0	54.0	4.2	PW6200650	53.57 x 3.53

Bore Dia. D_N H9	Groove Dia. d_1 h9	Groove Width L_1 +0.2	TSS Part No.	O-Ring Dimensions
70.0	59.0	4.2	PW6200700	56.74 x 3.53
70.0	54.5	6.3	PW6300700	53.34 x 5.33
75.0	64.0	4.2	PW6200750	63.09 x 3.53
75.0	59.5	6.3	PW6300750	56.52 x 3.53
80.0	**69.0**	**4.2**	**PW6200800**	**66.27 x 3.53**
80.0	**64.5**	**6.3**	**PW6300800**	**62.87 x 5.33**
80.0	**59.0**	**8.1**	**PW6400800**	**58.00 x 7.00**
85.0	69.5	6.3	PW6300850	69.22 x 5.33
85.0	64.0	8.1	PW6400850	63.00 x 7.00
90.0	79.0	4.2	PW6200900	78.97 x 3.53
90.0	74.5	6.3	PW6300900	72.39 x 5.33
90.0	69.0	8.1	PW6400900	68.00 x 7.00
95.0	84.0	4.2	PW6200950	82.14 x 3.53
95.0	79.5	6.3	PW6300950	78.74 x 5.33
95.0	74.0	8.1	PW6400950	73.00 x 7.00
100.0	**89.0**	**4.2**	**PW6201000**	**88.49 x 3.53**
100.0	**84.5**	**6.3**	**PW6301000**	**81.92 x 5.33**
100.0	**79.0**	**8.1**	**PW6401000**	**78 x 7.00**
105.0	94.0	4.2	PW6201050	91.67 x 3.53
105.0	89.5	6.3	PW6301050	88.27 x 5.33
110.0	99.0	4.2	PW6201100	98.02 x 3.53
110.0	94.5	6.3	PW6301100	91.44 x 5.33
110.0	89.0	8.1	PW6401100	88.00 x 7.00
115.0	99.5	6.3	PW6301150	97.79 x 5.33
120.0	109.0	4.2	PW6201200	107.54 x 3.53
120.0	104.5	6.3	PW6301200	100.97 x 5.33
120.0	99.0	8.1	PW6401200	98.00 x 7.00
125.0	**114.0**	**4.2**	**PW6201250**	**113.89 x 3.53**
125.0	**109.5**	**6.3**	**PW6301250**	**107.32 x 5.33**
125.0	**104.0**	**8.1**	**PW6401250**	**103.00 x 7.00**
130.0	114.5	6.3	PW6301300	113.67 x 5.33
130.0	109.0	8.1	PW6401300	108.00 x 7.00
135.0	114.0	8.1	PW6401350	113.67 x 7.00
140.0	124.5	6.3	PW6301400	123.19 x 5.33
140.0	119.0	8.1	PW6401400	116.84 x 7.00
150.0	134.5	6.3	PW6301500	132.72 x 5.33
150.0	129.0	8.1	PW6401500	126.37 x 7.00
160.0	**144.5**	**6.3**	**PW6301600**	**142.24 x 5.33**
160.0	**139.0**	**8.1**	**PW6401600**	**135.89 x 7.00**
170.0	149.0	8.1	PW6401700	145.42 x 7.00
180.0	164.5	6.3	PW6301800	164.47 x 5.33

Bore Dia. D_N H9	Groove Dia. d_1 h9	Groove Width L_1 +0.2	TSS Part No.	O-Ring Dimensions
180.0	159.0	8.1	PW6401800	158.12 x 7.00
190.0	169.0	8.1	PW6401900	164.47 x 7.00
200.0	**184.5**	**6.3**	**PW6302000**	**183.52 x 5.33**
200.0	**179.0**	**8.1**	**PW6402000**	**177.17 x 7.00**
210.0	189.0	8.1	PW6402100	183.52 x 7.00
220.0	199.0	8.1	PW6402200	196.22 x 7.00
230.0	214.5	6.3	PW6302300	208.92 x 5.33
230.0	209.0	8.1	PW6402300	208.92 x 7.00
240.0	219.0	8.1	PW6402400	215.27 x 7.00
250.0	**229.0**	**8.1**	**PW6402500**	**227.97 x 7.00**
250.0	**225.5**	**8.1**	**PW6802500**	**215.27 x 7.00**
250.0	**134.5**	**6.3**	**PW6302500**	**234.32 x 5.33**
260.0	239.0	8.1	PW6402600	240.67 x 7.00
270.0	249.0	8.1	PW6402700	240.67 x 7.00
280.0	259.0	8.1	PW6402800	253.37 x 7.00
290.0	269.0	8.1	PW6402900	266.07 x 7.00
300.0	279.0	8.1	PW6403000	278.77 x 7.00
300.0	275.5	8.1	PW6803000	266.07 x 7.00
320.0	**299.0**	**8.1**	**PW6403200**	**291.47 x 7.00**
320.0	**295.5**	**8.1**	**PW6803200**	**291.47 x 7.00**
350.0	325.5	8.1	PW6803500	316.87 x 7.00
360.0	335.5	8.1	PW6803600	329.57 x 7.00
380.0	355.5	8.1	PW6803800	354.97 x 7.00
400.0	**375.5**	**8.1**	**PW6804000**	**367.67 x 7.00**
450.0	425.5	8.1	PW6804500	417.96 x 7.00
500.0	**475.5**	**8.1**	**PW6805000**	**468.76 x 7.00**
600.0	575.5	8.1	PW6806000	557.66 x 7.00
700.0	672.0	9.5	PW6507000	670.00 x 8.40
780.0	752.0	9.5	PW6507800	750.00 x 8.40
800.0	772.0	9.5	PW6508000	770.00 x 8.40
900.0	872.0	9.5	PW6509000	870.00 x 8.40
1000.0	972.0	9.5	PW65X1000	970.00 x 8.40
1000.0	962.0	13.8	PW66X1000	960.00 x 12.00
1200.0	1172.0	9.5	PW65X1200	1170.00 x 8.40
1200.0	1162.0	13.8	PW66X1200	1160.00 x 12.00
1500.0	1462.0	13.8	PW66X1500	1460.00 x 12.00
2000.0	1962.0	13.8	PW66X2000	1960.00 x 12.00
2700.0	2662.0	13.8	PW66X2700	2660.00 x 12.00

The bore diameters in **bold** type comply with the recommendations of ISO 3320.
Other dimensions and all intermediate sizes up to 2700 mm diameter including imperial (inch) sizes can be supplied.
All O-Rings with 12 mm cross section are delivered as special profile ring.

POLYPAC® - PHD/P

Double-acting

Heavy Duty, High Pressure

Excellent Leakage Control

Material:
Zurcon® , NBR Elastomer + POM

PHD/P Seal

Description

The PHD/P Seal is a high-pressure heavy-duty piston seal with excellent leakage control and superior extrusion and wear resistance

The PHD/P seal is a combination of a Zurcon® polyurethane slipper seal energised by an elastomer profile ring and completed with two Back-up rings (POM). It is manufactured with a predefined interference fit, which together with the squeeze of the elastomer part ensures a good sealing effect even at low system pressure. At higher pressures the elastomer part is energised by the system pressure and consequently activates the slipper seal in the radial direction.

The Back-up rings prevent the slipper seal from extrusion and ensure a long service life even under harsh conditions.

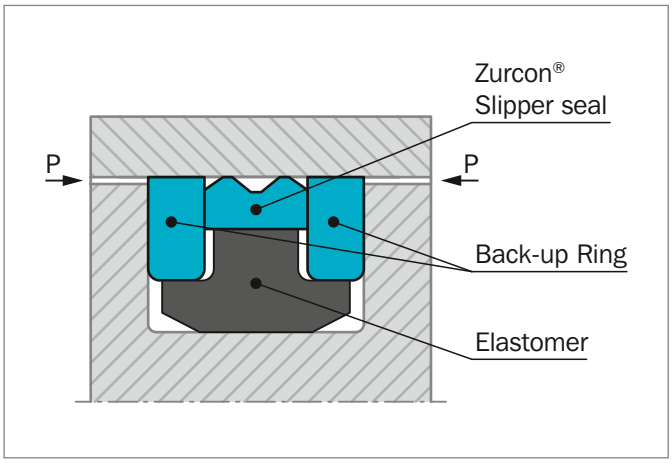

Figure 148: PHD/P Seal

ADVANTAGES

- Simple groove design
- Excellent sealing effect
- Excellent wear resistance
- Increased clearance possible
- Long service life

APPLICATION EXAMPLES

The PHD/P Seal is the recommended sealing element for double acting pistons of hydraulic cylinders working in very harsh conditions such as:

- Excavators
- Heavy duty cylinders

OPERATING CONDITIONS

Pressure:	Up to 35 MPa
Speed:	Up to 0.5 m/s
Temperature:	-35 °C to +110 °C
Media:	Mineral oil-based hydraulic fluids

IMPORTANT NOTE

The above data are maximum values and cannot be used at the same time, e.g. the maximum operating speed depends on material type, pressure, temperature and gap value. Temperature range also depends on media.

MATERIALS

Standard Application

For hydraulic components in mineral oils or medium with good lubricating performance.

Slipper Seal:	Zurcon® Z20 93 Shore A
Energiser:	NBR 80 Shore A
Back-up rings:	POM
Material code for the set:	Z2053

Installation Recommendation

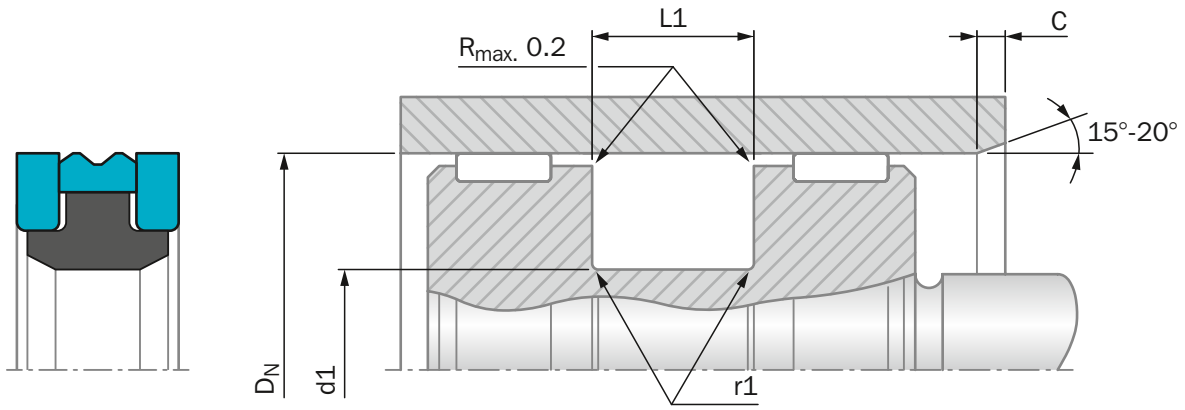

Figure 149: Installation Drawing

ORDERING EXAMPLE

PHD/P Seal, complete.

Bore Diameter:	D_N = 80.0 mm
TSS Part No.:	PKP0P0800
Material Set-Code:	Z2053
Polypac Ref. No.:	PHD 8065P

TSS Article No. **PKP0 P 0800 - Z2053**

- TSS Series No. — PKP0
- Type (Standard) — P
- Bore Diameter x 10 — 0800
- Quality Index (Standard) — -
- Material Set-Code — Z2053

Table 140: Installation Dimensions / TSS Part No.

Bore Diameter	Groove Diameter	Groove Width	Inlet Chamfer	Radius	TSS Article No.	Polypac Ref. No.
D_N H9	d1 h9	L1 +0.2	C	r1		
50.0	36.0	9.0	5.0	0.3	PKP0P0500-Z2053	PHD 5036P-Z20
55.0	41.0	9.0	5.0	0.3	PKP0P0550-Z2053	PHD 5541P-Z20
60.0	46.0	9.0	5.0	0.3	PKP0P0600-Z2053	PHD 6046P-Z20
63.0	48.0	11.0	5.0	0.5	PKP0P0630-Z2053	PHD 6348P-Z20
65.0	50.0	11.0	5.0	0.5	PKP0P0650-Z2053	PHD 6550P-Z20
70.0	55.0	11.0	5.0	0.5	PKP0P0700-Z2053	PHD 7055P-Z20
75.0	60.0	11.0	5.0	0.5	PKP0P0750-Z2053	PHD 7560P-Z20
80.0	65.0	11.0	5.0	0.5	PKP0P0800-Z2053	PHD 8065P-Z20
85.0	70.0	11.0	5.0	0.5	PKP0P0850-Z2053	PHD 8570P-Z20
90.0	75.0	11.0	5.0	0.5	PKP0P0900-Z2053	PHD 9075P-Z20
95.0	80.0	12.5	5.0	0.5	PKP0P0950-Z2053	PHD 9580P-Z20
100.0	85.0	12.5	5.0	0.5	PKP0P1000-Z2053	PHD 10085P-Z20

Bore Diameter	Groove Diameter	Groove Width	Inlet Chamfer	Radius	TSS Article No.	Polypac Ref. No.
D_N	d1	L1	C	r1		
H9	h9	+0.2				
105.0	90.0	12.5	5.0	0.5	PKP0P1050-Z2053	PHD 10590P-Z20
110.0	95.0	12.5	5.0	0.5	PKP0P1100-Z2053	PHD 11095P-Z20
115.0	100.0	12.5	5.0	0.5	PKP0P1150-Z2053	PHD 115100P-Z20
120.0	105.0	12.5	5.0	0.5	PKP0P1200-Z2053	PHD 120105P-Z20
125.0	102.0	16.0	6.5	0.6	PKP0P1250-Z2053	PHD 125102P-Z20
130.0	107.0	16.0	6.5	0.6	PKP0P1300-Z2053	PHD 130107P-Z20
135.0	112.0	16.0	6.5	0.6	PKP0P1350-Z2053	PHD 135112P-Z20
140.0	117.0	16.0	6.5	0.6	PKP0P1400-Z2053	PHD 140117P-Z20
145.0	122.0	16.0	6.5	0.6	PKP0P1450-Z2053	PHD 145122P-Z20
150.0	127.0	16.0	6.5	0.6	PKP0P1500-Z2053	PHD 150127P-Z20
155.0	132.0	16.0	6.5	0.6	PKP0P1550-Z2053	PHD 155132P-Z20
160.0	137.0	16.0	6.5	0.6	PKP0P1600-Z2053	PHD 160137P-Z20
165.0	142.0	16.0	6.5	0.6	PKP0P1650-Z2053	PHD 165142P-Z20
170.0	147.0	16.0	6.5	0.6	PKP0P1700-Z2053	PHD 170147P-Z20
180.0	157.0	16.0	6.5	0.6	PKP0P1800-Z2053	PHD 180157P-Z20

Radial Clearance: For pressure up to 35 MPa 0.50

Compact Seal POLYPAC® - Duopac DPS/DPC

Double-acting

Combined seal and guide element

Material:
Rubber fabric reinforced NBR and POM

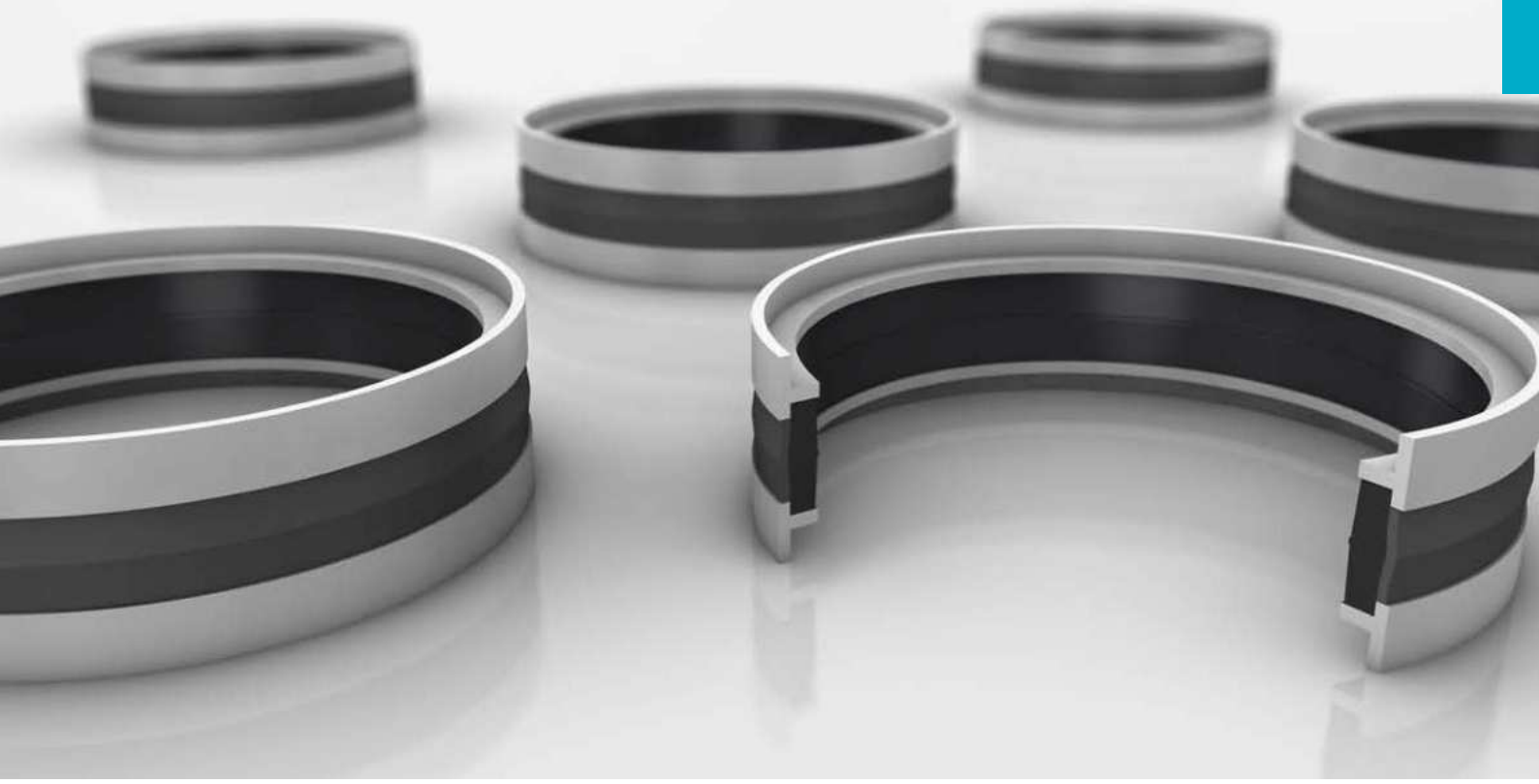

DUOPAC rubber fabric reinforced compact seals Type DPS and DPC

■ Description

The compact seals DUOPAC DPS and DPC types are double acting piston seals with integrated guide rings. DUOPAC has been designed to optimize the advantages of the materials selection:

- Fabric reinforcement with high mechanical strength, optimum thermal stability and lubricating properties is incorporated in the sealing element all over the dynamic contact area. For the DUOPAC DPC the reinforcement is extended on both sides to improve the extrusion resistance
- Nitrile based elastomer with optimum elasticity and low compression set provides the initial radial pre-load
- Acetal resin with improved form stability gives the Guide/ backup rings high distortion and extrusion resistance

TYPE DPS

The DPS profile has been designed for its installation in closed grooves. The radial dimension of the profile has been reduced to the minimum to allow the necessary deformation during installation in closed grooves.

Consequently its use must be limited to pressures up to 35 MPa.

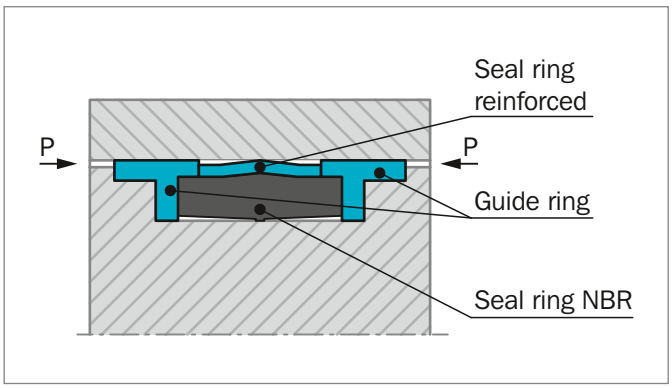

Figure 150: Compact Seal, Type DPS

TYPE DPC

The DPC profile is much more robust and can therefore be used for pressure level up to 70 MPa.

An open groove is necessary.

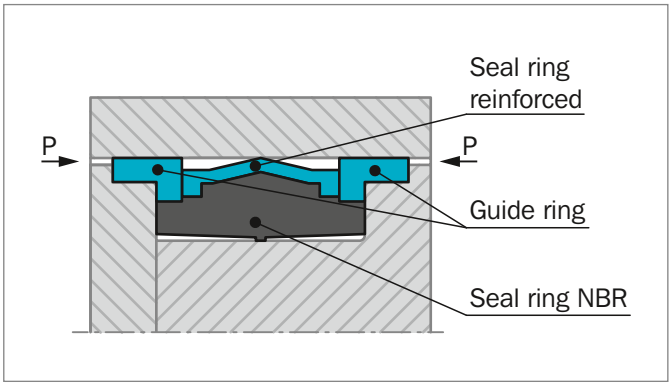

Figure 151: Compact Seal, Type DPC

ADVANTAGES

- DPS can be installed into closed grooves but its use must consequently be limited to medium duty applications
- DPC are usually installed in open grooves in Heavy Duty applications (pressure peak up to 80 MPa)
- Improved abrasion resistance
- Excellent sealing effect in combination with good dynamic and static friction behavior

APPLICATION EXAMPLES

The Compact seals are the recommended Sealing element for double acting Pistons of hydraulic components in following applications:

- Mining cylinders
- Presses
- Steel mills equipment
- Water hydraulic cylinders

OPERATING CONDITIONS

For an optimum performance of the DUOPAC, the recommended tolerances and surface finish must be applied.

Pressure:	Up to 35 MPa DPS type Up to 70 MPa DPC type
Speed:	Up to 0.5 m/s
Temperature:	-30 °C to +130 °C
Media:	Mineral oil based hydraulic fluids, water/oil and water/glycol emulsions.

IMPORTANT NOTE

The above data are maximum values and cannot be used at the same time, e.g. the maximum operating speed depends on material type, pressure, temperature and gap value. Temperature range also depends on media.

MATERIALS

- The compact seals DUOPAC are available in the following material composition:

Sealing element:	Rubber fabric reinforced NBR
Guide/Back-up Rings:	POM
Material set-code:	N0O0C

Installation Recommendation, Type DPS

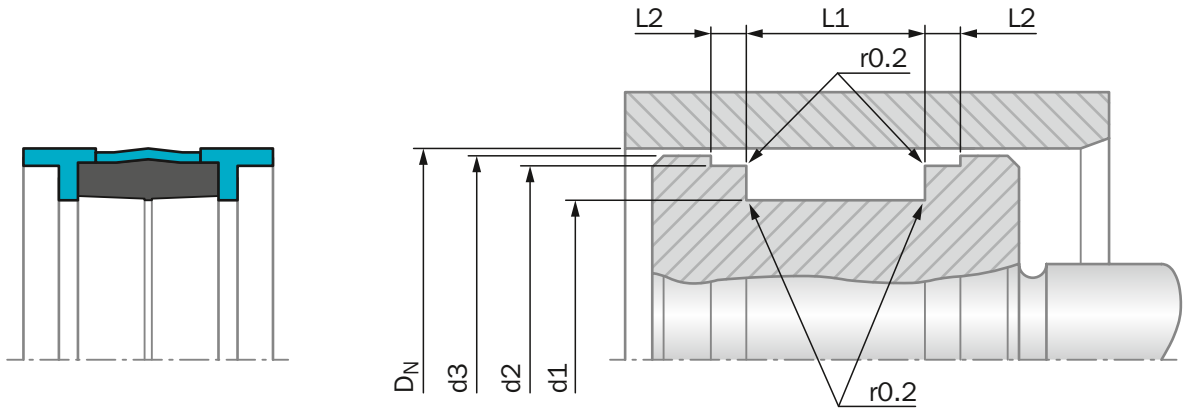

Figure 152: Installation Drawing

ORDERING EXAMPLE

Compact Seal Type DPS

Bore Diameter:	D_N = 80 mm
Groove Diameter:	d1 = 66 mm
Groove Width:	L1 = 22.5 mm
TSS Part No.:	PCE100800 from Table 141
Material Set-Code:	N000C

TSS Article No. **PCE1 0 0800 - N000C**

TSS Series No.
Type (Standard)
Bore Diameter x 10
Quality Index (Standard)
Material Set-Code
Polypac Ref. No.: DPS 8066

Table 141: Installation Dimensions / TSS Article No.

Bore Diameter	Groove Dimensions					TSS Article No.	Description
D_N	d1	L1	L2	d2	d3		
H11	h9	+0.2	+0.1	h9	h11		
25.0	**17.0**	**10.0**	**4.0**	**22.0**	**24.0**	**PCE000250-N000C**	**DPS 2517/1**
32.0	24.0	15.5	3.2	28.0	31.4	PCE000320-N000C	DPS 3224
32.0	**24.0**	**10.0**	**4.0**	**29.0**	**31.0**	**PCE100320-N000C**	**DPS 3224/1**
35.0	27.0	15.5	3.2	31.0	34.4	PCE000350-N000C	DPS 3527
40.0	32.0	15.5	3.2	36.0	39.4	PCE000400-N000C	DPS 4032
40.0	**32.0**	**10.0**	**4.0**	**37.0**	**39.0**	**PCE100400-N000C**	**DPS 4032/1**
45.0	37.0	15.5	3.2	41.0	44.4	PCE000450-N000C	DPS 4537
50.0	38.0	20.5	4.2	46.0	49.4	PCE000500-N000C	DPS 5038
50.0	**40.0**	**12.5**	**4.0**	**47.0**	**49.0**	**PCE100500-N000C**	**DPS 5040/1**
55.0	43.0	20.5	4.2	51.0	54.4	PCE000550-N000C	DPS 5543
60.0	48.0	20.5	4.2	56.0	59.4	PCE000600-N000C	DPS 6048
63.0	51.0	20.5	4.2	59.0	62.4	PCE000630-N000C	DPS 6351

Bore Diameter	Groove Dimensions					TSS Article No.	Description
D_N	d1	L1	L2	d2	d3		
H11	h9	+0.2	+0.1	h9	h11		
63.0	**53.0**	**12.5**	**4.0**	**60.0**	**62.0**	**PCE100630-N000C**	**DPS 6353/1**
65.0	53.0	20.5	4.2	61.0	64.4	PCE000650-N000C	DPS 6553
70.0	58.0	20.5	4.2	66.0	69.4	PCE000700-N000C	DPS 7058
75.0	63.0	20.5	4.2	71.0	74.4	PCE000750-N000C	DPS 7563
80.0	**65.0**	**20.0**	**5.0**	**76.0**	**78.5**	**PCE000800-N000C**	**DPS 8065/1**
80.0	66.0	22.5	5.2	76.0	79.4	PCE100800-N000C	DPS 8066
85.0	71.0	22.5	5.2	81.0	84.4	PCE000850-N000C	DPS 8571
90.0	76.0	22.5	5.2	86.0	89.4	PCE000900-N000C	DPS 9076
100.0	**85.0**	**20.0**	**5.0**	**96.0**	**98.5**	**PCE001000-N000C**	**DPS 10085/1**
100.0	86.0	22.5	5.2	96.0	99.4	PCE101000-N000C	DPS 10086
110.0	96.0	22.5	5.2	106.0	109.4	PCE001100-N000C	DPS 11096
120.0	106.0	22.5	5.2	116.0	119.4	PCE001200-N000C	DPS 120106
125.0	**105.0**	**25.0**	**6.3**	**120.0**	**123.0**	**PCE001250-N000C**	**DPS 125105/1**
125.0	108.0	26.5	7.2	121.0	124.4	PCE101250-N000C	DPS 125108
140.0	120.0	25.0	6.3	135.0	138.0	PCE001400-N000C	DPS 140120/1
140.0	123.0	26.5	7.2	136.0	139.4	PCE101400-N000C	DPS 140123
150.0	133.0	26.5	7.2	146.0	149.4	PCE001500-N000C	DPS 150133
160.0	**140.0**	**25.0**	**6.3**	**155.0**	**158.0**	**PCE001600-N000C**	**DPS 160140/1**
160.0	143.0	26.5	7.2	156.0	159.4	PCE101600-N000C	DPS 160143
180.0	163.0	26.5	7.2	176.0	179.4	PCE001800-N000C	DPS 180163
200.0	**170.0**	**36.0**	**12.5**	**192.0**	**197.0**	**PCE002000-N000C**	**DPS 200170/1**
200.0	180.0	31.5	9.2	196.0	199.4	PCE102000-N000C	DPS 200180
220.0	200.0	31.5	9.2	216.0	219.4	PCE002200-N000C	DPS 220200
250.0	230.0	31.5	9.2	246.0	249.4	PCE002500-N000C	DPS 250230

The bore diameters in **bold** type comply with the recommendations of ISO 6547.

Installation Recommendation, Type DPC

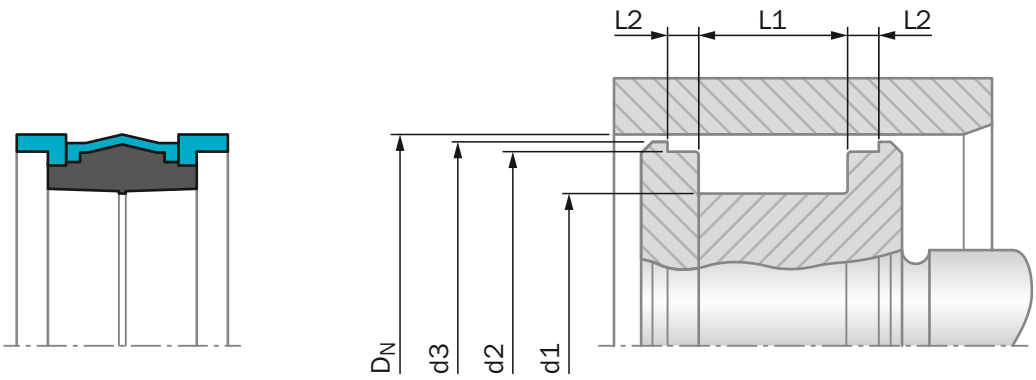

Figure 153: Installation Drawing

ORDERING EXAMPLE

Compact Seal Type DPC

Bore Diameter:	D_N = 80 mm
Groove Diameter:	d1 = 60 mm
Groove Width:	L1 = 22.4 mm
TSS Part No.:	PCF000800 from Table 142
Material Set-Code:	N000C

TSS Article No. **PCF0 0 0800 - N000C**

TSS Series No.
Type (Standard)
Bore Diameter x 10
Quality Index (Standard)
Material Set-Code
Polypac Ref. No.: DPS 8060

Table 142: Installation Dimensions / TSS Article No.

Bore Diameter	Groove Dimensions					TSS Article No.	Description
D_N	d1	L1	L2	d2	d3		
H11	h9	+0.2	+0.1	h11	h11		
30.0	17.0	15.4	6.35	26.50	29.00	PCF000300-N000C	DPC 3017
35.0	22.0	15.4	6.35	31.40	33.70	PCF000350-N000C	DPC 3522
40.0	24.0	18.4	6.35	35.40	38.70	PCF000400-N000C	DPC 4024
45.0	29.0	18.4	6.35	40.40	43.70	PCF000450-N000C	DPC 4529
50.0	34.0	18.4	6.35	45.40	48.70	PCF000500-N000C	DPC 5034
55.0	39.0	18.4	6.35	50.40	53.70	PCF000550-N000C	DPC 5539
60.0	44.0	18.4	6.35	55.40	58.70	PCF000600-N000C	DPC 6044
65.0	50.0	18.4	6.35	60.40	63.70	PCF000650-N000C	DPC 6550
70.0	50.0	22.4	6.35	64.20	68.30	PCF000700-N000C	DPC 7050
75.0	55.0	22.4	6.35	69.20	73.30	PCF000750-N000C	DPC 7555
80.0	60.0	22.4	6.35	74.20	78.30	PCF000800-N000C	DPC 8060
85.0	65.0	22.4	6.35	79.20	83.30	PCF000850-N000C	DPC 8565

Bore Diameter	Groove Dimensions					TSS Article No.	Description
D_N	d1	L1	L2	d2	d3		
H11	h9	+0.2	+0.1	h11	h11		
90.0	70.0	22.4	6.35	84.15	88.30	PCF000900-N000C	DPC 9070
95.0	75.0	22.4	6.35	89.15	93.30	PCF000950-N000C	DPC 9575
100.0	75.0	22.4	6.35	93.15	98.05	PCF001000-N000C	DPC 10075
100.0	80.0	25.4	6.35	94.15	98.30	PCF101000-N000C	DPC 10080
105.0	85.0	22.4	6.35	98.10	103.00	PCF001050-N000C	DPC 10585
110.0	85.0	22.4	6.35	103.10	108.00	PCF001100-N000C	DPC 11085
120.0	100.0	25.4	6.35	114.10	118.00	PCF001200-N000C	DPC 120100
130.0	105.0	25.4	6.35	123.10	128.00	PCF001300-N000C	DPC 130105
140.0	115.0	25.4	6.35	133.00	138.00	PCF001400-N000C	DPC 140115
150.0	125.0	25.4	6.35	143.00	148.00	PCF001500-N000C	DPC 150125
160.0	135.0	33.0	6.35	153.00	158.00	PCF001600-N000C	DPC 160135

POLYPAC® - Veepac CH

Single-acting

Set of Chevron Ring

With Support and Pressure Energizing Ring

Without and with Anti-extrusion Ring

Material:
Fabric Reinforced Rubber -
POM or PTFE

Veepac CH

Description

Veepac seals are sets of fabric reinforced chevron rings. They are composed by a support ring, "V" shaped sealing rings and a pressure energizing ring.

The support ring or base ring guides and sustains the other "V" shaped rings for best performance. Special versions provide incorporated anti-extrusion rings, either on the inner or outer side, for rod or piston applications (see type CH/NEI or CH/NEO). In standard version the support ring is manufactured in cotton fabric reinforced rubber, for a good anti-extrusion resistance.

The intermediate "V" shaped rings (vee-rings) are the real sealing elements of Veepac seals. Their particular shape confirs the capacity of increasing sealing effectiveness under high pressure. In standard version they are made in cotton fabric reinforced NBR and pure NBR.

The energizer ring ensures uniform loading of pressure on the other rings. This element is manufactured in acetal resin, or cotton fabric reinforced nitrile for diameters over 300 mm (standard material).

DESIGN

The veepac seals are available in different compositions. The standard version consists in a support ring, two fabric reinforced vee-rings, one rubber vee-ring and the energizing ring.

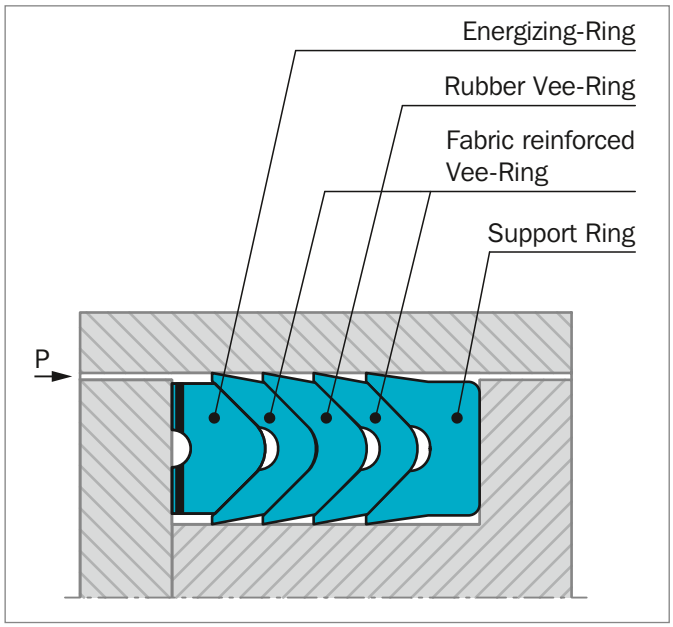

Figure 154: Veepac standard design

When the rubber vee-ring isn't available (indicated in the Table 145 with the symbol ^) the veepac are assembled with three fabric reinforced vee-ring as shown in figure below.

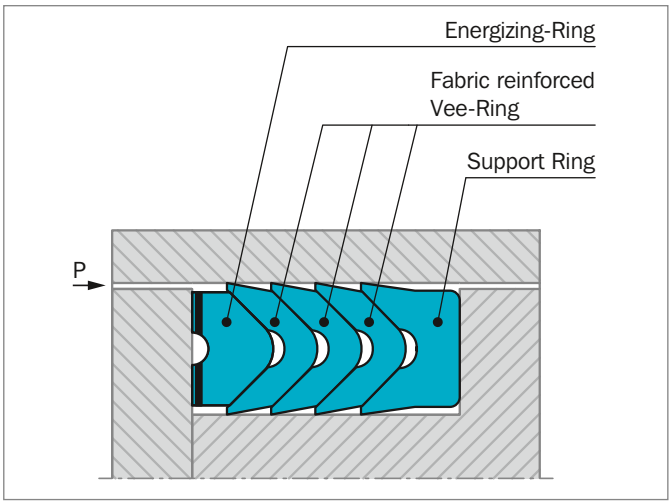

Figure 155: Veepac design with 3 fabric reinforced vee-ring

Where extrusion gaps are greater than those specified or for higher pressure conditions, special designs incorporating anti-extrusion rings can be made, to suit piston (suffix NEO) at the Polypac ref.

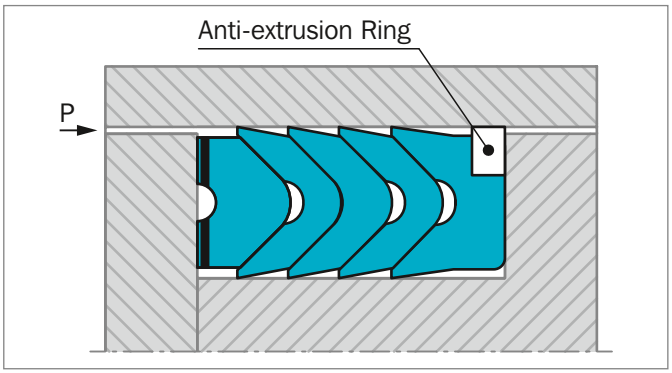

Figure 156: Veepac design with anti-extrusion ring

ADVANTAGES

- Exceptional wear resistance
- Pre-load adjustment capability
- Excellent behaviour in harsh conditions
- Rod-seal replacement without complete cylinder dismantling possible
- Long service life

APPLICATION EXAMPLES

VEEPAC seals are recommended for single acting or double acting (back to back installation) hydraulic cylinders in the following applications:

- Ship hydraulics
- Excavators
- Steel mills
- Presses

OPERATING CONDITIONS

Pressure:	Up to 40 MPa
Velocity:	Up to 0.5 m/s
Temperature:	-30 °C to +200 °C
Media:	Hydraulic fluids Mineral Oil based hydraulic fluids, Water/ oil and Water/Glycol emulsions
Groove type:	Open

IMPORTANT NOTE

The above data are maximum values and cannot be used at the same time, e.g. the maximum operating speed depends on material type, pressure, temperature and gap value. Temperature range also depends on media.

GAP DIMENSIONS

To prevent extrusion the diameter not facing the pressure must be max. 0.3 mm smaller (than the piston seal) and 0.3 mm larger (than the rod seal). Using Veepac with Back-up Ring enables double values.

MATERIALS

Components of the VEEPAC seals are made in different combinations of materials, according to the specific application (see table below).

Table 143: Material Selection

Material Set Code	Temperature	Sealing Ring Material	Energizer Ring Material	
N000C	-30 to +130 °C	Cotton reinforced NBR	POM-GL-BK	up to 300 mm I.D.
			Cotton reinforced NBR	over 300 mm I.D.
V000A	-20 to +150 °C	Aramidic Fiber reinforced FKM	POM-GL-BK	up to 300 mm I.D.
			Aramidic Fiber reinforced FKM	over 300 mm I.D.
V0P0A	-20 to +200 °C	Aramidic Fiber reinforced FKM	Filled PTFE	up to 300 mm I.D.
			Aramidic Fiber reinforced FKM	over 300 mm I.D.

Highlighted material is standard.

Installation Recommendation, Type POLYPAC® CH/NEO (with Back-up Ring)

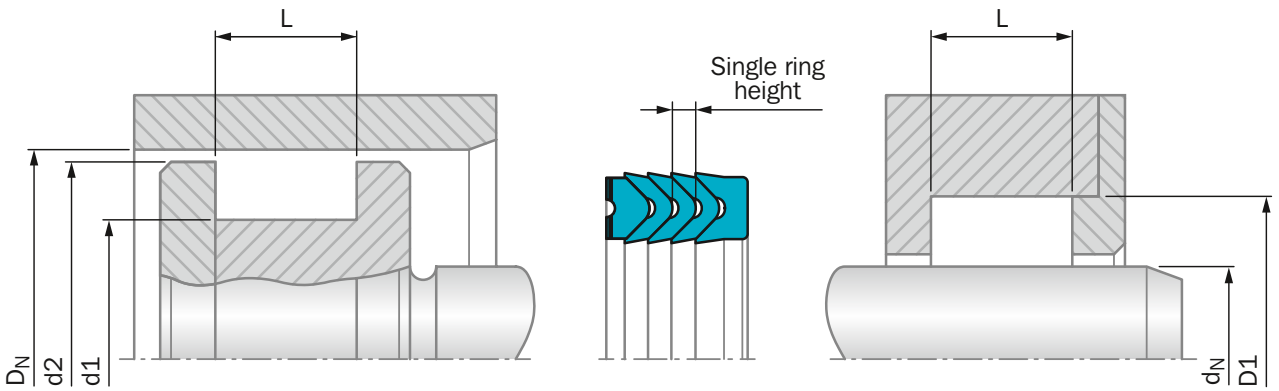

Figure 157: Installation Drawing

ORDERING EXAMPLE

For a **piston** application of standard Veepac sealing element composed by: Support ring **with anti-extrusion ring,** 3 elements vee-rings and Energizer ring:

Bore Diameter:	D_N = 150.0 mm
Groove Diameter:	d1 = 120.0 mm
TSS Part No.:	PCH0E1500
Material Set-Code:	N000C
Polypac Part. No.:	CH 590472/NEO

TSS Article No. PCH0 E 1500 - N000C

- TSS Series No.
- Type (Standard)
- Bore Diameter x 10
- Quality Index
- Material Set-Code

Table 144: Installation Dimensions / TSS Part No.

Bore Diameter	Groove Diameter	Groove Width	Diameter	Single Ring Height	Special Version		TSS Part No.	Polypac Ref. No.*
D_N H9/f8	d1 h11	L -0.25	d2 +/-0.1					
80.00	60.00	32.15	79.00	5.66			PCH1E0800	CH 314236/NEO
88.90	69.85	35.50	87.90	4.83			PCH0E0889	CH 350275/1/NEO
90.00	70.00	30.00	89.00	5.08			PCH0E0900	CH 354275/NEO
95.25	76.20	28.97	94.20	5.16			PCH0E0952	CH 375300/NEO
95.25	82.55	21.72	94.20	3.71	#	^	PCH1E0952	CH 375325/NEO
101.60	85.72	26.75	100.60	4.14		^	PCH0E1016	CH 400337/NEO
107.95	88.90	31.00	106.90	4.90		^	PCH0E1079	CH 425350/NEO
114.30	88.90	35.32	113.30	6.55		^	PCH0E1143	CH 450350/NEO
114.30	95.25	25.40	113.30	5.00		^	PCH1E1143	CH 450375/NEO
114.30	98.42	26.59	113.30	4.34		^	PCH2E1143	CH 450387/NEO

Bore Diameter	Groove Diameter	Groove Width	Diameter	Single Ring Height	Special Version		TSS Part No.	Polypac Ref. No.*
D_N H9/f8	d1 h11	L -0.25	d2 +/-0.1					
125.00	100.00	36.90	124.00	6.60	#	^	PCH1E1250	CH 492393/NEO
125.00	105.00	27.00	124.00	5.00		^	PCH2E1250	CH 492413/1/NEO
127.00	101.60	32.15	126.00	5.82	#		PCH0E1270	CH 500400/NEO
127.00	107.95	30.00	126.00	4.52		^	PCH1E1270	CH 500425/NEO
139.70	114.30	33.50	138.70	5.56		^	PCH0E1397	CH 550450/1/NEO
140.00	115.00	37.12	139.00	6.00		^	PCH0E1400	CH 551452/NEO
140.00	120.00	30.00	139.00	5.36			PCH1E1400	CH 551472/NEO
150.00	120.00	44.00	149.00	7.50			PCH0E1500	CH 590472/NEO
152.40	127.00	38.63	151.40	6.48			PCH0E1524	CH 600500/NEO
160.00	130.00	41.50	159.00	5.50	#		PCH1E1600	CH 629511/NEO
160.00	130.00	43.50	159.00	5.50	#		PCH2E1600	CH 629511/1/NEO
187.32	171.45	24.20	186.30	4.09	#	^	PCH0E1873	CH 737675/NEO
210.00	180.00	32.97	209.00	5.99			PCH0E2100	CH 826708/B/NEO
222.25	190.50	50.00	221.20	7.57		^	PCH0E2222	CH 875750/NEO
280.00	250.00	32.97	279.00	5.99		^	PCH0E2800	CH 1102984/B/NEO

* As the Polypac Ref. No. does not refer to the material, please always state the full number if available for identification.
"#" and "^" see Table 145.

Table 145: Explanation to "Special Version"

Not available with rubber V-ring		^		
Available upon request	#			

POLYPAC® - Veepac CH/G1

Single-acting

Chevron Ring

With Support and Pressure Energizing Ring

Material:
POM, PTFE, Fabric Reinforced Rubber

Veepac CH/G1

Description

Veepac G1 is a set of fabric reinforced rings comprising one support ring, one sealing ring and a pressure energizing ring. It is a single acting piston seal.

The support ring or base ring is manufactured out of nitrile elastomer with high Shore A hardness and reinforced with impregnated cotton fabric layers for an optimal extrusion resistance.

The intermediate ring - the sealing ring - is a fabric reinforced nitrile elastomer with good resilience characteristics enabling the radial deflection under pressure load. Consequently the optimum sealing force is applied to the bore to be sealed.

The energiser or spreader ring is made of POM or PTFE. Its function is to ensure a uniform pre-load of the seal.

In some specific applications the energiser ring is made out of Acetal resin or Phenolic resin. Please contact our local TSS company for further details.

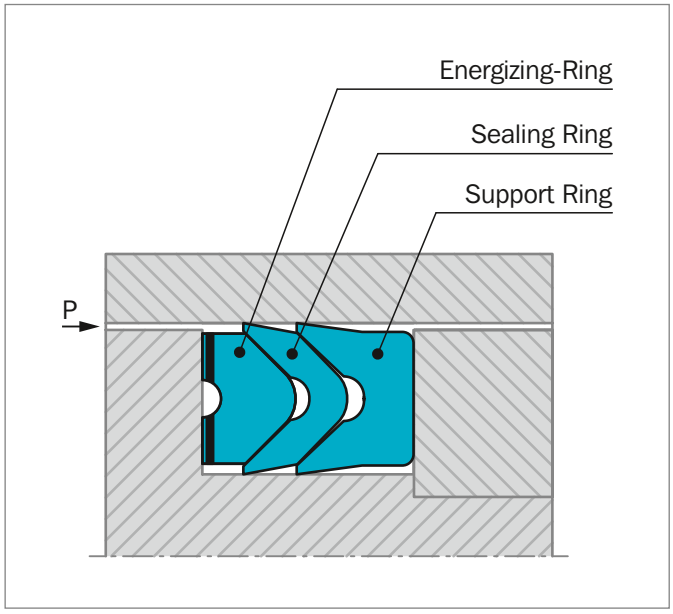

Figure 158: Veepac CH/G1

ADVANTAGES

- Exceptional wear resistance
- Pre-load adjustment capability
- Excellent behavior in harsh conditions

APPLICATION EXAMPLES

The Veepac seal is recommended for single acting or double acting (back to back installation) pistons in following applications:

- Mining equipment
- Excavator cylinders
- Steel mill cylinders
- Presses

OPERATING CONDITIONS

Pressure:	Up to 40 MPa
Velocity:	Up to 0.5 m/s
Temperature:	-30 °C to +200 °C, depending on material
Media:	Mineral oil, water glycol, water emulsions

IMPORTANT NOTE

The above data are maximum values and cannot be used at the same time, e.g. the maximum operating speed depends on material type, pressure, temperature and gap value. Temperature range also depends on media.

MATERIALS

The following material can be delivered:

Material Set Code	Temperature	Sealing Ring Material	Energiser/ Spreader Ring Material
N000C	-30 to +130 °C	Cotton reinforced NBR	POM
V000A	-20 to +150 °C	Aramidic fiber reinforced FKM	POM
V0P0A	-20 to +200 °C	Aramidic fiber reinforced FKM	PTFE

Highlighted material is standard.

Installation Recommendation, Type CH/G1

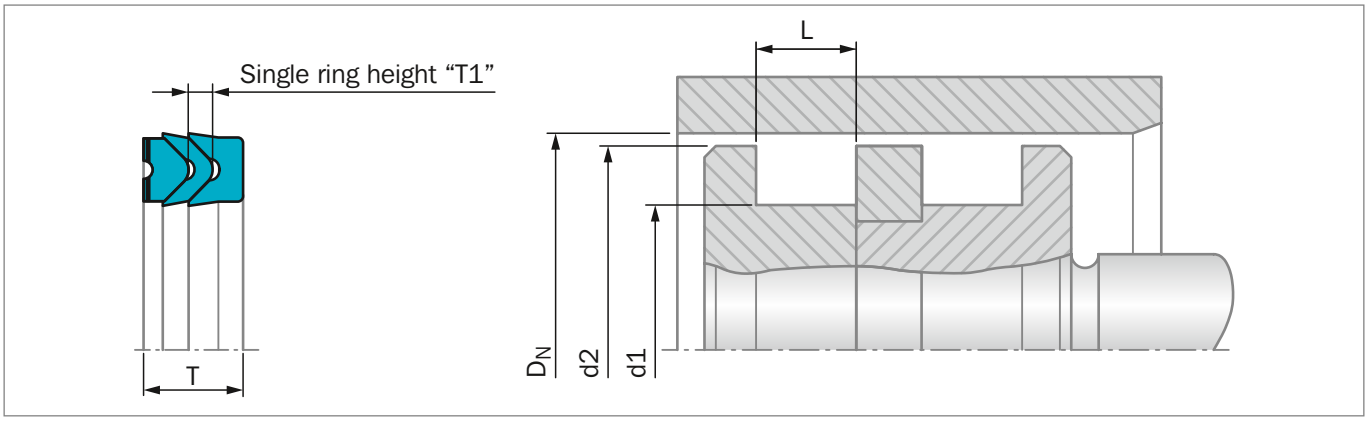

Figure 159: Installation Drawing

ORDERING EXAMPLE

For sealing element Veepac CH/G1 comprising 1 base ring and 1 Chevron element in cotton fabric reinforced NBR and the Spreader ring in POM.

Bore Diameter:	D_N = 80.0 mm
TSS Part No.:	PCH0G0800 from Table 146
Material Set-Code:	N000C

TSS Article No. PC H0 G 0800 - N000C

- Article Sub Group
- TSS Series No.
- Execution Mark
- Bore diameter x 10
- Quality Index (Standard)
- Material code

Polypac Ref. No.: CH 314236/G1

Table 146: Installation Dimensions / TSS Part No.

Bore Diameter		Groove Diameter	Groove Width	Piston Diameter	Seal Width	Single Ring Height	TSS Part No.	Description
D_N	Tol.	d1 h11	L +0.3	d2 -0.3	T	T1		
40.0	H9/f8	25.0	11.5	39.0	11.0	3.2	PCH0G0400	CH 157098/G1
50.0	H9/f8	35.0	11.5	49.0	11.0	3.5	PCH0G0500	CH 196137/G1
55.0	H9/f8	40.0	11.5	54.0	11.0	2.9	PCH0G0550	CH 216157/G1
63.0	H9/f8	48.0	13.0	62.0	12.5	3.7	PCH0G0630	CH 248188/G1
65.0	H9/f8	50.0	11.5	64.0	11.0	3.9	PCH0G0650	CH 255196/G1
80.0	H9/f8	60.0	15.2	79.0	14.6	5.1	PCH0G0800	CH 314236/G1
100.0	H8/f8	80.0	21.2	99.0	20.6	5.0	PCH0G1000	CH 393314/G1
125.0	H8/f7	100.0	25.8	124.0	25.0	6.1	PCH0G1250	CH 492393/G1
140.0	H8/f7	115.0	25.8	139.0	25.0	8.0	PCH0G1400	CH 551452/G1
160.0	H8/f7	130.0	29.0	158.5	28.0	6.0	PCH0G1600	CH 629511/G1
180.0	H8/f7	150.0	31.5	178.5	30.5	9.9	PCH0G1800	CH 708590/G1
200.0	H8/f7	170.0	33.5	198.5	32.5	7.4	PCH0G2000	CH 787669/G1
240.0	H8/f7	210.0	33.5	238.5	32.5	10.2	PCH0G2400	CH 944826/G1
250.0	H8/f7	220.0	33.5	248.5	32.5	10.2	PCH0G2500	CH 984866/G1

POLYPAC® - Selemaster DSM

Double-acting

Compact Piston Seal

Material:
NBR + Fiber Reinforced NBR + POM

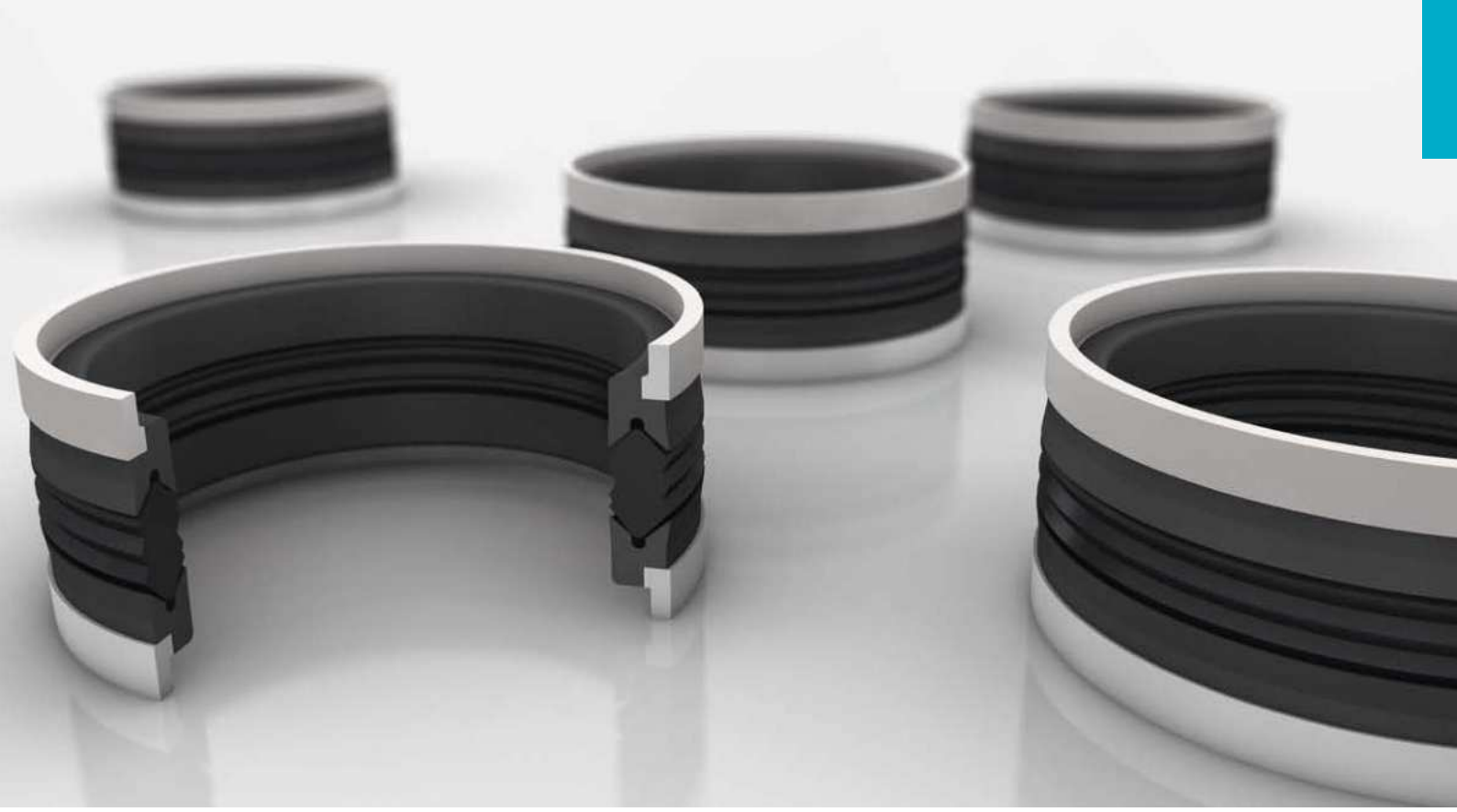

Selemaster DSM

■ Description

The piston seal DSM range has been designed to meet the needs of hydraulic equipments operating at high pressures and subjected to severe loading and vibration conditions.

The main sealing element is manufactured in a highly compression set resistant nitrile. The most important quality of this element is the design of the multiple sealing lips for maximum sealing efficiency and end face configuration, which ensures that the selemaster can tolerate vibrations and severe misalignment.

The two support rings are made in cotton fabric reinforced nitrile elastomer; the "U" shape is energised when pressure is applied.

The last elements are the two guide rings manufactured in acetal resin which have also the function of anti-extrusion rings.

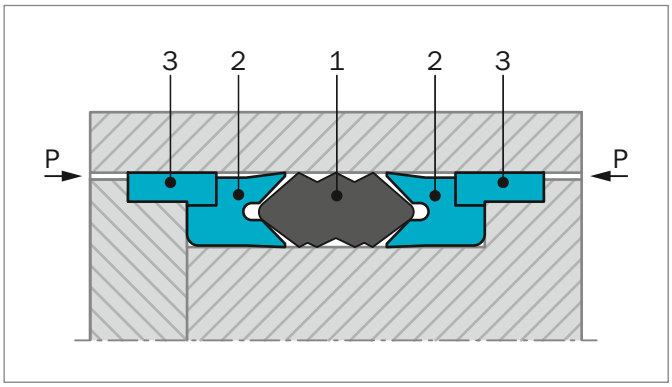

Figure 160: Selemaster design

1) Sealing element
2) Support ring
3) Guide ring

ADVANTAGES

- Effective sealing during vibration and shock loading
- High sealing efficiency
- Extrusion resistance at high pressure

APPLICATION EXAMPLES

- Earth-moving machines
- Excavators
- Lift platforms

OPERATING CONDITIONS

Pressure:	Up to 70 MPa
Velocity:	Up to 0.5 m/s
Temperature:	-40 °C to +130 °C
Media:	Hydraulic fluids Mineral oil-based hydraulic fluids, water and water/glycol emulsions
Groove type:	Open

IMPORTANT NOTE

The above data are maximum values and cannot be used at the same time, e.g. the maximum operating speed depends on material type, pressure, temperature and gap value. Temperature range also depends on media.

STANDARD MATERIAL

1) Sealing element	NBR 80
2) Support ring	Cotton reinforced NBR
3) Guide ring	POM

Installation Recommendation

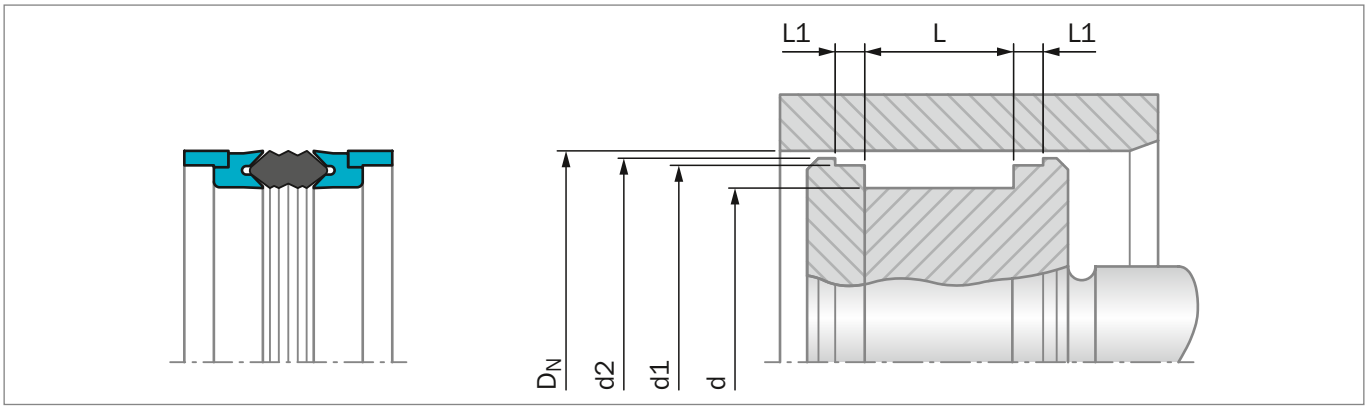

Figure 161: Installation Drawing

ORDERING EXAMPLE

Selemaster DSM

Bore Diameter:	D_N = 70.0 mm
Groove Diameter:	d = 50.0 mm
Groove Width	E = 35.0 mm
TSS Part No.:	PCK000700 from Table 147
Material Code:	N8CO
Polypac Ref.:	DSM 275196/1A

TSS Article No. PCK 0 00700 - N8CO

TSS Series No.
Type (Standard)
Bore Diameter x 10
Quality Index (Standard)
Material Set-Code

Table 147: Installation Dimensions / TSS Part No.

Bore Diameter	Groove Diameter	Groove Width	Groove Width	Diameter	Diameter		TSS Part No.	Description
D_N H11	d h11	L +0.2	L1 +0.1	d1 +/-0.05	d2 +/-0.07			
45.00	29.00	32.00	6.35	38.80	42.80	^	PCK000450	DSM 177114/1A
50.00	34.00	32.00	6.35	43.77	47.80		PCK000500	DSM 196133/1A
55.00	40.00	32.00	6.35	48.77	52.80		PCK000550	DSM 216157/1A
60.00	44.00	32.00	6.35	53.80	57.80		PCK000600	DSM 236173/1A
63.00	47.00	32.00	6.35	56.74	60.80		PCK000630	DSM 248185/1A
63.50	47.62	31.75	6.35	57.25	61.30	^	PCK000635	DSM 250187/1A
65.00	49.00	32.00	6.35	58.70	62.80		PCK000650	DSM 255192/1A
70.00	50.00	35.00	9.52	62.62	67.50		PCK000700	DSM 275196/1A
75.00	55.00	35.00	9.52	67.70	72.50		PCK000750	DSM 295216/1A
80.00	60.00	35.00	9.52	72.62	77.50		PCK000800	DSM 314236/1A
80.00	64.00	32.00	9.52	72.62	77.50		PCK100800	DSM 314251/1A
85.00	65.00	35.00	9.52	77.62	82.50		PCK000850	DSM 334255/1A
90.00	70.00	35.00	9.52	82.58	87.80		PCK000900	DSM 354275/1A
90.00	74.00	32.00	9.52	82.87	87.80		PCK100900	DSM 354291/1A
92.07	73.02	34.92	9.52	84.66	89.60	^	PCK000921	DSM 362287/1A
95.00	75.00	35.00	9.52	87.60	92.50		PCK000950	DSM 374295/1A

Bore Diameter	Groove Diameter	Groove Width	Groove Width	Diameter	Diameter		TSS Part No.	Description
D_N H11	d h11	L +0.2	L1 +0.1	d1 +/-0.05	d2 +/-0.07			
95.25	76.20	34.92	9.52	87.86	92.80	^	PCK000953	DSM 375300/1A
100.00	80.00	35.00	9.52	92.60	97.50		PCK001000	DSM 393314/1A
101.60	82.55	34.92	9.52	94.20	99.10		PCK001016	DSM 400325/1A
105.00	85.00	35.00	9.52	97.60	102.50	^	PCK001050	DSM 413334/1A
110.00	85.00	45.00	12.70	101.82	107.30		PCK001100	DSM 433334/1A
110.00	90.00	35.00	9.52	102.70	107.50		PCK101100	DSM 433354/1A
114.30	88.90	44.45	12.70	106.12	111.60		PCK001143	DSM 450350/1A
115.00	90.00	45.00	12.70	106.82	112.30		PCK001150	DSM 452354/1A
120.00	95.00	45.00	12.70	111.82	117.30		PCK001200	DSM 472374/1A
120.00	100.00	35.00	9.52	112.80	117.50		PCK101200	DSM 472393/1A
125.00	100.00	45.00	12.70	116.82	122.30		PCK001250	DSM 492393/1A
127.00	101.60	44.45	12.70	118.80	124.30		PCK001270	DSM 500400/1A
130.00	105.00	45.00	12.70	121.82	127.30		PCK001300	DSM 511413/1A
130.00	110.00	35.00	9.52	122.70	127.30		PCK101300	DSM 511433/1A
135.00	110.00	45.00	12.70	126.82	132.30		PCK001350	DSM 531433/1A
139.70	114.30	44.45	12.70	131.47	137.00	^	PCK001397	DSM 550450/1A
140.00	115.00	45.00	12.70	131.72	137.30		PCK001400	DSM 551452/1A
140.00	120.00	35.00	9.52	132.70	137.30		PCK101400	DSM 551472/1A
145.00	120.00	45.00	12.70	136.72	142.30		PCK001450	DSM 570472/1A
150.00	125.00	45.00	12.70	141.72	147.30		PCK001500	DSM 590492/1A
152.40	127.00	44.45	12.70	144.15	149.70	^	PCK001524	DSM 600500/1A
160.00	135.00	45.00	12.70	151.72	157.10		PCK001600	DSM 629531/1A
165.00	135.00	45.00	12.70	158.00	162.10		PCK001650	DSM 649531/1A
170.00	140.00	45.00	12.70	163.00	167.90		PCK001700	DSM 669551/1A
177.80	152.40	44.45	12.70	169.55	175.10		PCK001778	DSM 700600/1A
180.00	155.00	45.00	12.70	171.60	177.10		PCK001800	DSM 708610/1A
185.00	160.00	45.00	12.70	176.72	182.10		PCK001850	DSM 728629/1A
190.00	165.00	45.00	12.70	181.72	187.10		PCK001900	DSM 748649/1A
200.00	175.00	45.00	12.70	191.72	197.10		PCK002000	DSM 787688/1A
210.00	185.00	45.00	12.70	201.60	207.10		PCK002100	DSM 826728/1A
220.00	195.00	45.00	12.70	211.60	217.10		PCK002200	DSM 866767/1A
230.00	205.00	45.00	12.70	221.72	227.10		PCK002300	DSM 905807/1A
240.00	215.00	45.00	12.70	231.72	237.10		PCK002400	DSM 944846/1A
250.00	225.00	45.00	12.70	241.72	247.10		PCK002500	DSM 984886/1A
260.00	235.00	45.00	12.70	251.72	257.10		PCK002600	DSM 1024925/1A
270.00	245.00	45.00	12.70	261.72	267.10		PCK002700	DSM 1062965/1A
280.00	255.00	45.00	12.70	271.72	277.10		PCK002800	DSM 11021004/1A
290.00	265.00	45.00	12.70	281.72	287.10		PCK002900	DSM 11411043/1A
300.00	275.00	45.00	12.70	291.72	297.10		PCK003000	DSM 11811082/1A
360.00	335.00	44.50	12.70	351.76	357.30		PCK003600	DSM 14171318/1A

^ Available upon request

Additional Seals

Available upon Request

Old Series

Special Series

POLYPAC® D11W

Double-acting piston seal for dynamic applications. Installed in open grooves. The NBR sealing element is supported at both sides by vulcanized cotton fabric-reinforced rings with additional guide rings. High sealing efficiency and high wear resistance.

Diameter Range mm	Pressure Range MPa	Temperature Range °C	Velocity m/s
25 - 300	Up to 50	-30 to +200	Up to 0.5

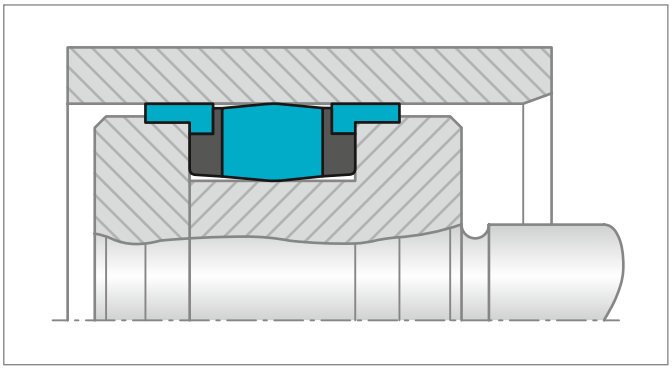

POLYPAC® DS - DS/NEO

Single-acting piston U-Ring for dynamic applications. Installed in open grooves. The U-shaped sealing element is made out of cotton fabric-reinforced NBR, an NBR energizer ring and an additional POM Back-up ring can be integrated (DS/NEO). High sealing efficiency and high wear resistance.

Diameter Range mm	Pressure Range MPa	Temperature Range °C	Velocity m/s
25 - 300	Up to 70 (DS/NEO)	-30 to +130	Up to 0.5

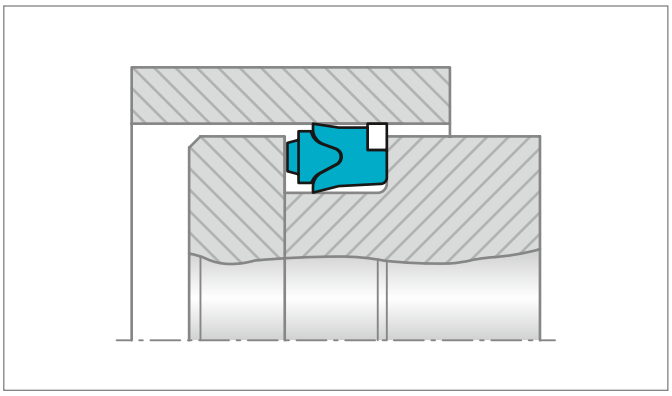

POLYPAC® B/NWO

Single-acting piston seal for dynamic applications. Installed in open grooves. The nitrile sealing element is supported by a vulcanized cotton fabric-reinforced ring with additional guide rings. High sealing efficiency and high wear resistance.

Diameter Range mm	Pressure Range MPa	Temperature Range °C	Velocity m/s
25 - 300	Up to 50	-30 to +200	Up to 0.5

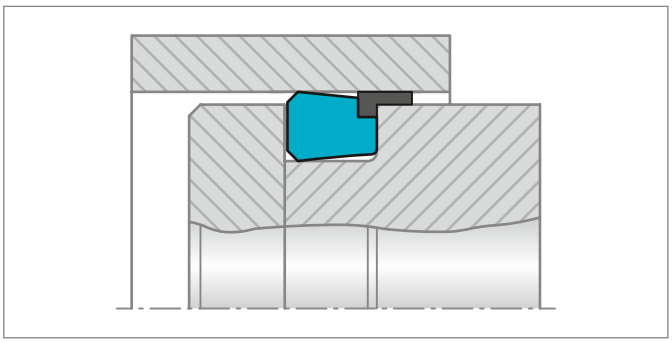

POLYPAC® B/NWO - KR

Same sealing element as B/NWO with an additional retaining ring in front to allow easier installation.

Diameter Range mm	Pressure Range MPa	Temperature Range °C	Velocity m/s
25 - 300	Up to 50	-30 to +200	Up to 0.5

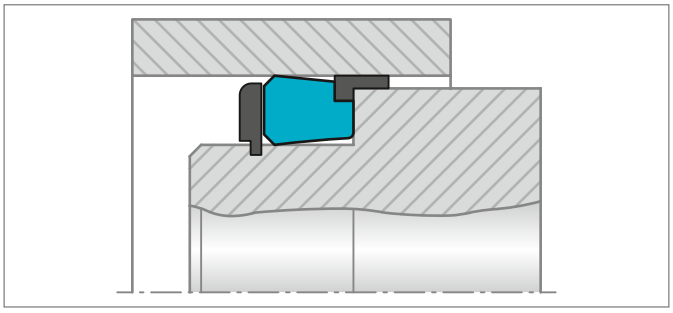

POLYPAC® B/NEO

Single-acting piston seal for dynamic applications. Installed in open grooves. The nitrile sealing element is supported by a vulcanized cotton fabric-reinforced ring with additional anti-extrusion ring. High sealing efficiency and wear resistance.

Diameter Range mm	Pressure Range MPa	Temperature Range °C	Velocity m/s
30 - 65	Up to 40	-30 to +130	Up to 0.5

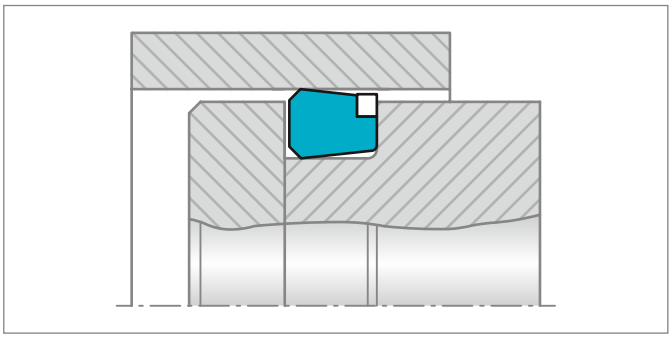

TURCON® VARISEAL® W

Single-acting piston seal energized by a slantcoil spring. Its main advantage lies in its low friction and constant preloading force over a relatively large deformation range.

The Turcon® Variseal® W is used wherever friction has to be kept within a narrow tolerance zone.

Diameter Range mm	Pressure Range MPa	Temperature Range °C	Velocity m/s
8 - 2500	Up to 40	-70 to +260	Up to 15

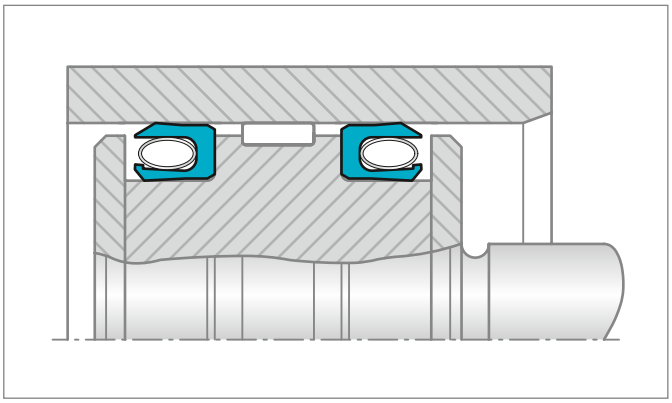

TURCON® VARISEAL® M2 CR

Single-acting sealing element comprising a U-shaped Turcon® ring and a stainless steel energizing V-spring. Low friction with no stick-slip, minimal break out force and high wear resistance. Resistant to most liquids and chemicals. Unlimited shelf life.

With integrated back up rings in Zurcon® Z43 for higher pressures or larger gaps.

Diameter Range mm	Pressure Range MPa	Temperature Range °C	Velocity m/s
8 - 330	Up to 100	-45 to +260	Up to 5

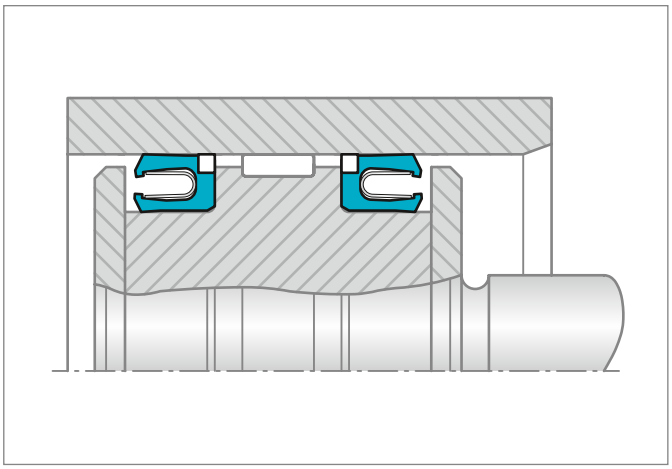

TURCON® GLYD RING® CR

Double-acting O-Ring energized piston seal with one or two corner reinforcements for dynamic applications. Installed in closed grooves, including grooves to ISO 7425-1, as piston Turcon® Glyd Ring® . Low friction with no stick-slip, minimal break out force and high wear resistance with integrated Back-up Rings for higher pressures or larger gaps.
Standard TSS Part Numbers are available (PGR).

Diameter Range mm	Pressure Range MPa	Temperature Range °C	Velocity m/s
20 - 2700	Up to 100	-45 to +200	Up to 5

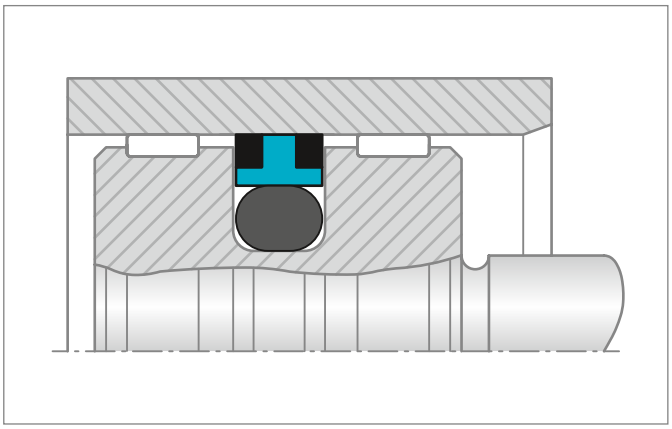

TURCON® CAPTIVE GLYD RING®

A double-acting seal recommended for linear applications. It is designed to pass over holes/ports in the counter surface or to slide across mating surfaces that have dimensional changes from a small diameter with sealing function over the seal to a large diameter with no sealing function or vice versa. Split hardware is required and prevents the seal from pulling out the groove while passing over ports or variable diameter counter parts.
Standard TSS Part Numbers are available (PGC).

Diameter Range mm	Pressure Range MPa	Temperature Range °C	Velocity m/s
6 - 2600	Up to 60	-45 to +200	Up to 15

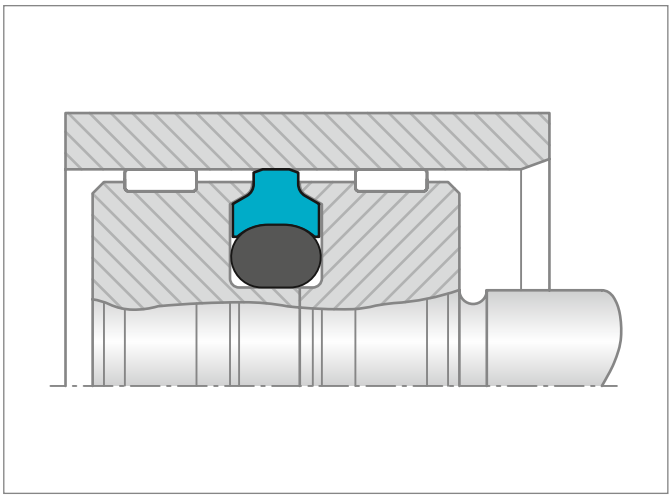

TURCON® CAPTIVE GLYD RING® WITH DOUBLE O-RING

A double-acting seal for linear applications recommended for passing over larger holes/ports in the counter surface or to slide across mating surfaces that have dimensional changes from a small diameter with sealing function over the seal to a large diameter with no sealing function or vice versa. Split hardware is required and prevents the seal from pulling out of the groove while passing over ports or variable diameter counter parts.

Diameter Range mm	Pressure Range MPa	Temperature Range °C	Velocity m/s
6 - 2600	Up to 60	-45 to +260	Up to 15

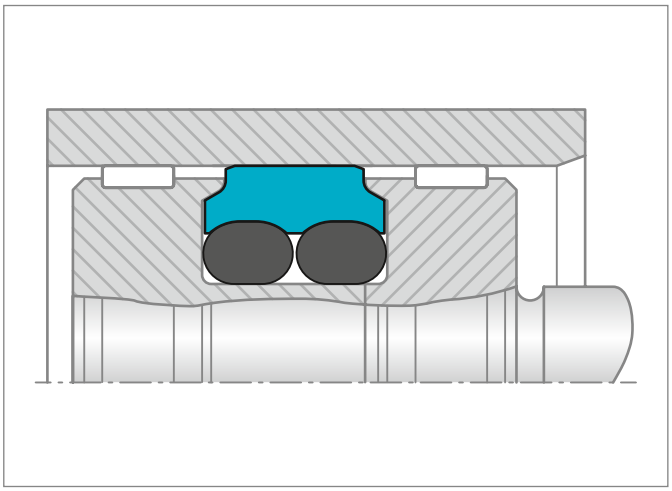

TURCON® CAPTIVE GLYD RING® CR

A double-acting corner reinforced seal for higher pressure linear applications recommended for passing over larger holes/ports in the counter surface, or to slide across mating surfaces that have dimensional changes from a small diameter with sealing function over the seal to a large diameter with no sealing function or vice versa. Split hardware is required and prevents the seal from pulling out the groove while passing over ports or variable diameter counter parts.

Diameter Range mm	Pressure Range MPa	Temperature Range °C	Velocity m/s
6 - 2600	Up to 100	-45 to +260	Up to 15

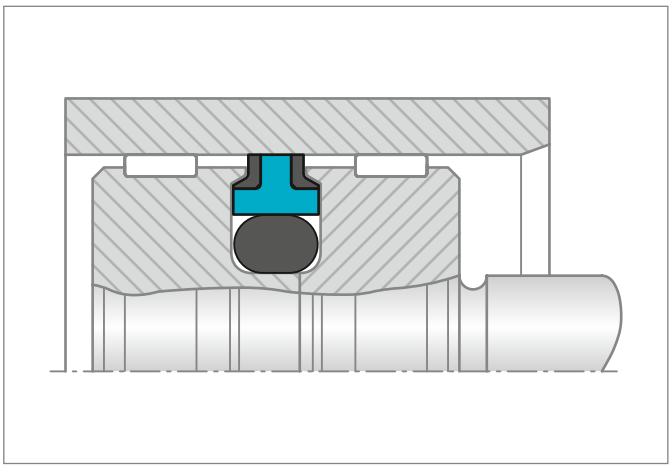

TURCON® STEPSEAL® 2A

Single-acting primary seal for applications requiring stabilized seal position in the groove. A further development on Turcon® Stepseal® 2K by adding a stabilizing edge, which prevents the seal from tilting, caused by seal-system pressure build-up between seals in tandem configuration. It also increases assembly robustness through protection of the seal face during insertion of the rod. Same high sealing properties as Stepseal® 2K. Stepseal® 2A is used as a primary seal in piston sealing systems, preferably together with a secondary seal from the range of Turcon® and Zurcon® seals.

Installation in the same grooves as Turcon® Stepseal® 2K and grooves according to ISO 7425-1.
Standard TSS Part Numbers are available (PST).

Diameter Range mm	Pressure Range MPa	Temperature Range °C	Velocity m/s
15 - 2700	60	-45 to +200	Up to 15

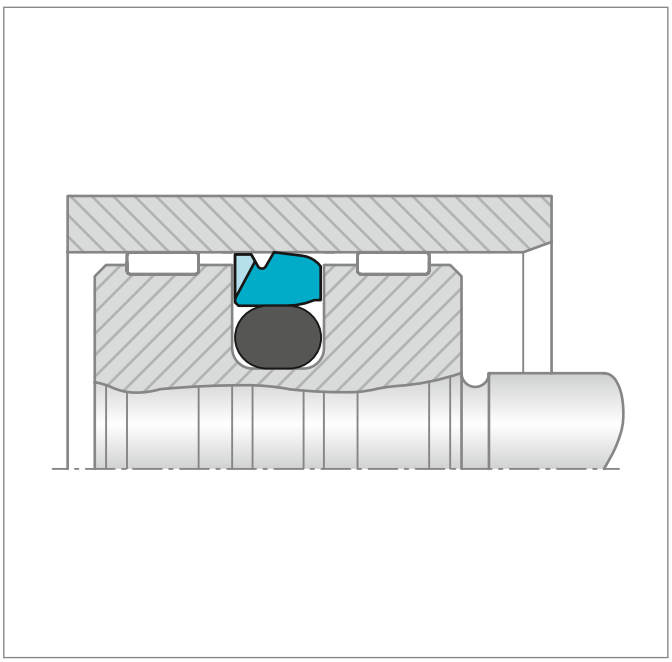

TURCON® STEPSEAL® 2A CR

Single-acting O-Ring energized piston seal with integrated Back-up Ring for higher pressure or bigger gaps for dynamic applications. High sealing efficiency, low friction with no stick-slip, minimal break-out force and high wear resistance. Installed in closed grooves including grooves acc. ISO 7425-1

Standard TSS Part Numbers are available (PSB).

Diameter Range mm	Pressure Range MPa	Temperature Range °C	Velocity m/s
15 - 2700	100	-45 to +200	Up to 5

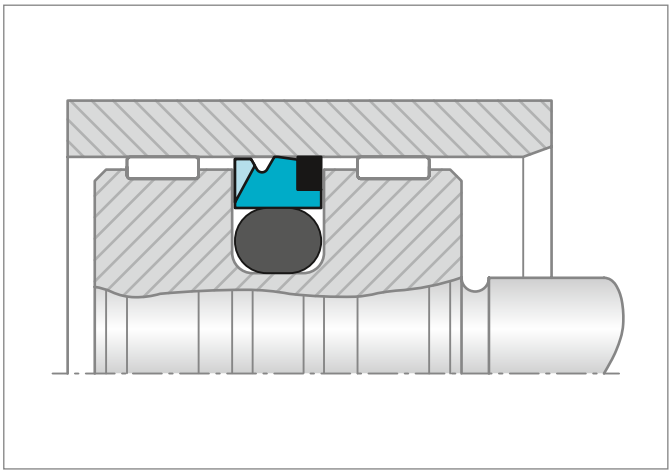

TURCON® BUFFER RING

Turcon® Buffer Ring is an uncut piston ring. With notches on one side, the ring is a single-acting seal often used as protector of a common sealing system against peak pressures, where the notch prevents risk of pressure trap.
If double-acting sealing is required, it is necessary to install two buffer rings, back-to-back, to take the pressure from both sides. For linear, helical and rotary movements.

Standard TSS Part Numbers are available (PFB).

Diameter Range mm	Pressure Range MPa	Temperature Range °C	Velocity m/s
8 - 2500	60	+5 to +160	Up to 15 (10 rotary)

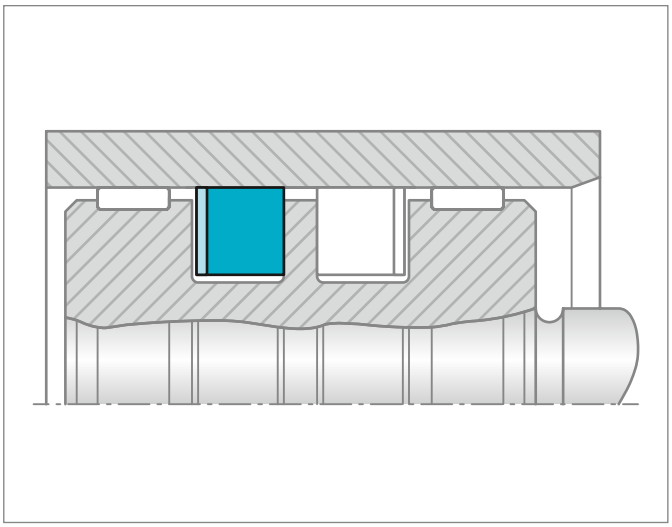

TURCON® GLYD RING® SG

Double-acting O-Ring energized piston seal for dynamic applications. Generally applied as spare part or for heavy applications requiring seals with oversized cross-sections. Installation according to ISO 7425-1 “Square Groove housings for pistons seals”.
Turcon® materials provide low friction with no stick-slip, minimal break out force and high wear and pressure resistance.

Standard TSS Part Numbers are available (PGM).

Diameter Range mm	Pressure Range MPa	Temperature Range °C	Velocity m/s
10 - 2700	Up to 60	-45 to +200	Up to 5

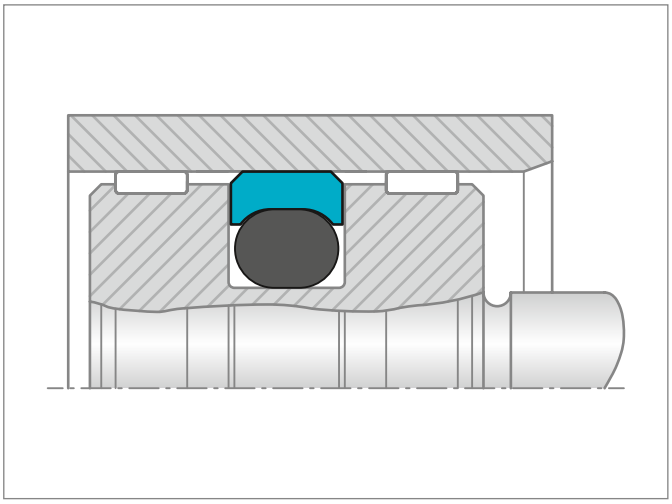

TURCON® STEPSEAL® SG

Single-acting O-Ring energized piston seal for dynamic applications. Generally applied as spare part or for heavy applications requiring seals with oversized cross-sections. Installation identical to ISO 7425-1 “Square Groove housings for pistons seals”. Turcon® materials provide low friction with no stick-slip, minimal break out force and high wear and pressure resistance.

Standard TSS Part Numbers are available (PSM).

Diameter Range mm	Pressure Range MPa	Temperature Range °C	Velocity m/s
10 - 2700	Up to 60	-45 to +200	Up to 5

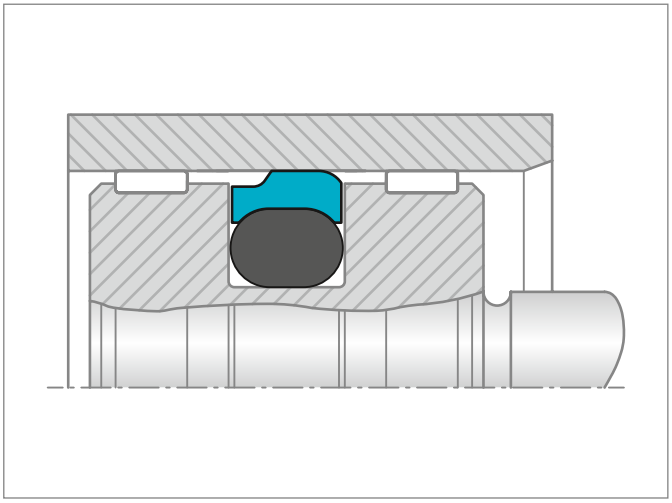

TURCON® AQ-SEAL® BEAN SEAL

A double-acting rubber energized piston seal for sealing between two media, e.g. fluid/gas separation by incorporating a narrow footprint elastomer Bean Seal into the dynamic sealing face. Recommended for piston accumulators, preferably in tandem configuration with a Turcon® Stepseal® V. Extended diameter range compared to standard AQ-Seal® at page 327.
Installation in grooves according to ISO 7425-1 (see standard Turcon® AQ-Seal).

Standard TSS Part Numbers are available (PQB).

Diameter Range mm	Pressure Range MPa	Temperature Range °C	Velocity m/s
16 - 2300	Up to 50	-45 to +110	Up to 2

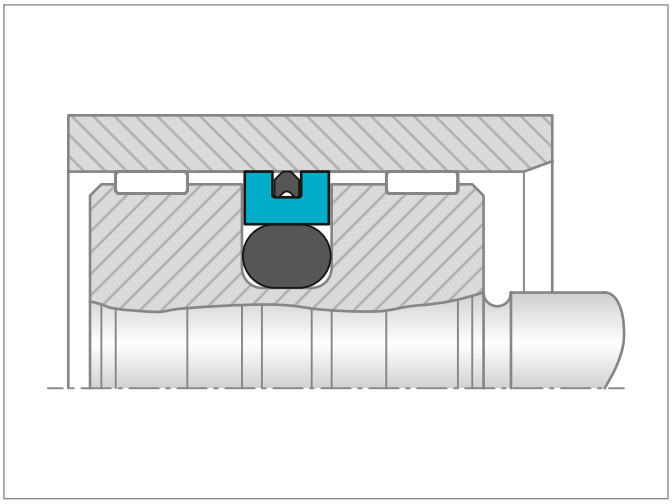

TURCON® AQ-SEAL® 5 BEAN SEAL

A double-acting rubber energized piston seal for sealing between two media, e.g. fluid/gas separation by incorporating a narrow footprint elastomer Bean Seal installed into the dynamic sealing face. Recommended for piston accumulators preferably in tandem configuration with a Turcon® Stepseal® V. Extended diameter range compared to standard AQ-Seal® 5 at page 317. Installation in the same housing groove dimensions as standard Turcon® AQ-Seal® 5.

Standard TSS Part Numbers are available (PQC).

Diameter Range mm	Pressure Range MPa	Temperature Range °C	Velocity m/s
16 - 2300	Up to 60	-45 to +110	Up to 3

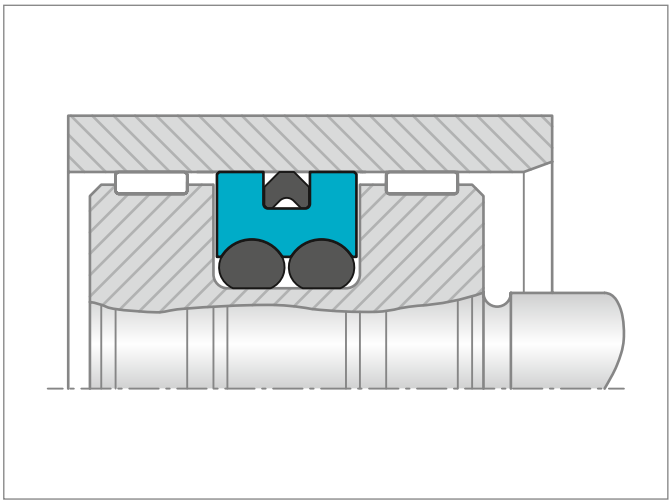

Scrapers

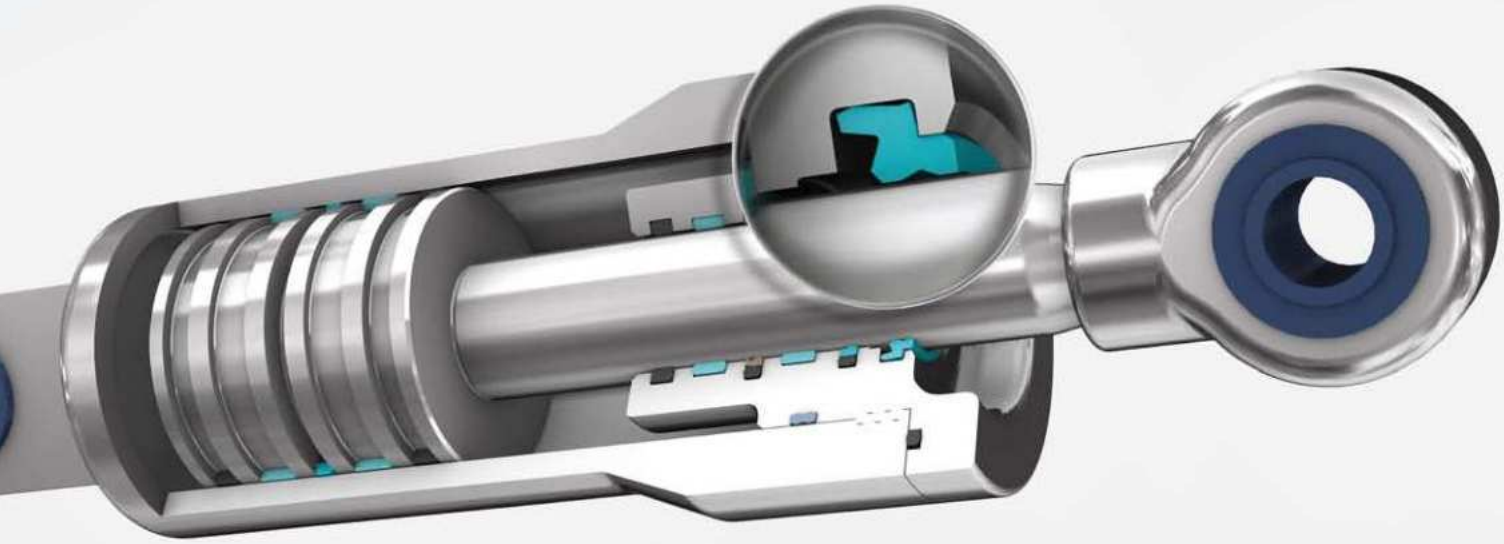

Contents

440	Choice of Scraper Element
445	Turcon® Excluder® 2
453	Turcon® Excluder® 5
461	Turcon® Excluder® F
471	Turcon® Excluder® S
483	Turcon® Excluder® 1 and 113
493	Scraper DA 17
499	Zurcon® Scraper DA 22
505	Zurcon® Scraper DA 24 & DA 24 Venting version
511	Scraper WRM
519	Zurcon® Scraper ASW
525	Zurcon® Scraper WNE
531	Zurcon® Scraper WNV
535	Scraper WSA
541	Zurcon® Scraper SWP
547	Metal Scraper
553	Turcon® Variseal® M2S
561	Additional Scrapers

Choice of Scraper Element

Scrapers are installed in hydraulic cylinders to wipe any dirt, foreign particles, chips, moisture, etc. from the piston rods as they are retracted into the system, thus preventing contamination of the hydraulic medium which would otherwise damage wear rings, seals and other components.

Single and double-acting scrapers can be used, depending on the application and the sealing system. They differ quite distinctly in their function: single-acting scrapers are designed to keep out contamination from the outside; double-acting scrapers have the additional function of optimising the sealing system and scraping off the existing residual fluid film, to avoid any external leakage.

In order to satisfy both the different technical and economic demands, there is a complete range of scrapers with optimised geometries made with high-quality materials.

Before selecting the scraper and the material, it is essential to know all the desired functional parameters. The table on following pages allows a preliminary choice of the scraper type and material, according to the specific requirements of the application.

Further general informations together with specific design and installation instructions for the particular scraper type and material can be found.

NOTE ON ORDERING

All multi-element standard scrapers are generally supplied as a complete set. The set includes scraper and energizing element. The O-Ring does not have to be ordered separately. It is also possible, however, to use other O-Ring materials from our O-Ring Catalogue. In this case, please order the scraper and O-Ring separately.

Older designs of scrapers no longer contained in this catalogue obviously continue to be available. When possible, however, for new applications we recommend the use of DIN/ISO series listed in the catalogue.

The sizes contained in this catalogue are generally available from stock and can be supplied at short notice. We reserve the right to modify our article structure without prior notice.

Please do not hesitate to contact your local Trelleborg Sealing Solutions marketing company for futher information on specific applications and special technical questions.

Table 148: Selection Criteria for Scrapers

Scraper		Application				Standard	Size Range	Groove Type	Ac-tion		Technical Data*		Recom-mended Scraper Mate-rial
											Temp. Range**	Speed	
		Field of Application											
Type	Page		Light	Medium	Heavy	ISO	mm	mm	Single	Double	°C	m/s	
Turcon® Excluder® 2	445	Industrial hydraulics	•	•	•	6195 Type D	4-2600	Split < 30 Closed > 30		•	-45/+200	15	M12
		Machine tools	•	•	•								
		Injection molding machines	•	•	•								
		Servo hydraulic cylinders	•	•	•								T46
		Robotics	•	•	•								
Turcon® Excluder® 5	453	Heavy duty mobile and industrial hydraulics	•	•	•	6195 Type D	20-2600	Split < 30 Closed > 30		•	-45/+200	15	M12
													T46
		Presses	•	•	•		20-2200				-45/+110	2	Z52
		Steel mills	•	•	•								
Turcon® Excluder® F	461	Machine tools	•	•		-	19-1000	Closed > 19		•	-45/+200	15	M12
		Automation	•	•									
		Valves	•	•									T46
		Small industrial hydraulics	•	•									
Turcon® Excluder® S	471	Heavy hydraulics		•	•	-	16-2600	Split		•	-45/+200	15	M12
		Offshore hydraulics		•	•								T46
		Water barriers		•	•						-45/+80	2	Z80/ Z82
Turcon® Excluder® 1 and 113	483	Industrial hydraulics	•	•		6195 Type D	12-1000	Split < 30 Closed > 30	•		-45/+200	15	M12
		Machine tools	•	•									T46
		Servo hydraulics	•	•							-45/+110	2	Z52
Scraper DA 17	493	Industrial hydraulics	•	•		-	10-440	Split < 18 Closed > 18		•	-30/+110	1	NBR
		Machine tools	•	•									
		Presses	•	•									

* The data above are maximum values and cannot be used at the same time.
** Temperature Range is depending on choise of elastomer material and media.

Scraper		Application				Standard	Size Range	Groove Type	Ac-tion		Technical Data*		Recom-mended Scraper Mate-rial
		Field of Application									Temp. Range**	Speed	
Type	Page		Light	Medium	Heavy	ISO	mm	mm	Single	Double	°C	m/s	
Zurcon® Scraper DA 22	499	ISO standard cylinder	•	•	•	6195 Type C	5-180	Split < 18 Closed > 18		•	-35/+100	1	Z201
		Industrial hydraulic cylinders	•	•	•								
Zurcon® Scraper DA 24 & DA 24 Venting Version	505	Mobile hydraulics	•	•	•	-	45-290	Closed		•	-35/+100	1	Z201
		Construction machinery	•	•	•								
		Agriculture machinery	•	•	•								
Scraper WRM	511	Agriculture machinery	•	•		-	12-260	Closed	•		-30/+110	1	NBR
		Handling equipment	•	•									
Zurcon® Scraper ASW	519	Agriculture machinery	•	•		-	8-125	Split < 14 Closed > 14	•		-35/+100	1	Z201
		Mobile hydraulic machinery	•	•									
Zurcon® Scraper WNE	525	Agriculture machinery	•	•	•	-	8-250	Closed	•		-35/+100	1	Z201
		Mobile hydraulic machinery	•	•	•								

* The data above are maximum values and cannot be used at the same time.
** Temperature Range is depending on choise of elastomer material and media.

Scraper		Application				Standard	Size Range	Groove Type	Ac-tion		Technical Data*		Recom-mended Scraper Mate-rial
		Field of Application									Temp. Range**	Speed	
Type	Page		Light	Medium	Heavy	ISO	mm	mm	Single	Double	°C	m/s	
Zurcon® Scraper WNV	531	Agriculture machinery	•	•	•	6195 Type A	16-100	Closed		•	-35/+100	1	Z201
		Mobile hydraulic machinery	•	•	•								
		ISO standard cylinder	•	•	•								
		Lift trucks	•	•	•								
		Cargo tailboards	•	•	•								
		Steering cylinders	•	•	•								
Scraper WSA	535	Agriculture machinery	•	•		-	16-120	Open	•		-30/+110	1	NBR + Metal
		Standard hydraulic cylinder	•	•									
Zurcon® Scraper SWP	541	Construction machinery		•	•	-	25-190	Open	•		-35/+100	1	Z201 + Metal
		Link pin seals		•	•								
Metal Scraper	547	Agriculture machinery	•	•	•	-	12-220	Open	•		-40/+110	1	Metal + NBR + Brass
		Mobile hydraulic machinery	•	•	•								
		ISO standard cylinder	•	•	•								
Turcon® Variseal® M2S	553	Marine environments	•	•	•	-	3-3200	Split or Stepped Housing	•		-50/+80	2	Z80
		Subsea Application	•	•	•	-					-50/+260	15	T40
		Hydraulics	•	•	•	-					-196/+80	1	Z80
		Low temperature / Cryogenic	•	•		-					-50/+260	15	T40
		Chemical processing	•	•	•	-					-50/+80	2	Z81
		Food & Pharmaceutical	•	•		-					-50/+260	15	MF4

* The data above are maximum values and cannot be used at the same time.
** Temperature Range is depending on choise of elastomer material and media.

Turcon® Excluder® 2

Double-acting

Rubber-energized Double-acting scraper

Material:
Turcon®, Zurcon® and Elastomer

Turcon® Excluder® 2

Description

Turcon® Excluder® 2 is a patented double-acting scraper with scraper lip respectively sealing lip, positioned back-to-back. Excluder® 2 is always installed with an elastic O-Ring in one groove. The scraper function is performed by Excluder® 2. The O-Ring maintains the pressure of the scraper lips against the sliding surface and can compensate any deflections of the piston rod.

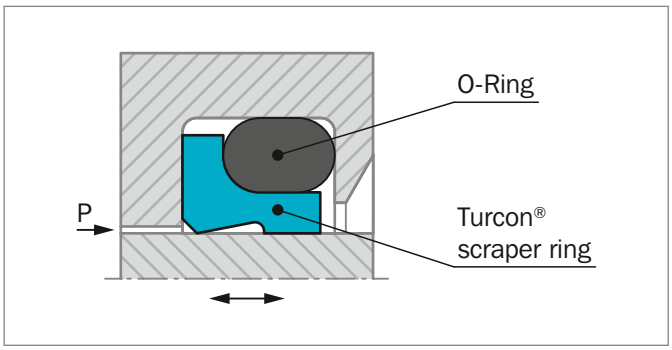

Figure 162: Turcon® Excluder® 2

Excluder® 2 has two functions:

- Scrape contaminants from the retracting piston rod to protect the system from soiling
- Hold back the residual oil film on the extending piston rod on the medium side.

Excluder® 2 is used in conjunction with our rod seals Turcon® Stepseal® 2K, Turcon® VL Seal® or Zurcon® Rimseal, i.e. seals with hydrodynamic back-pumping function.

ADVANTAGES

- Outstanding sliding properties
- Stick-slip-free, no sticking
- Can compensate for deflections of the piston rod
- Space-saving construction
- Very good scraping effect against outside contaminants, even with firmly adhered dirt, etc.
- Very good scraping effect from the inside against the residual oil film adhering to the surface of the piston rod
- Very high resistance to hydraulic media
- Available for all diameters up to 2600 mm (Turcon®) and up to 2200 mm (Zurcon® Z51/Z52)
- ISO 6195 Type D installation dimensions up to diameter 63 mm

OPERATING CONDITIONS

Speed:	Up to 15 m/s for Turcon® materials
	Up to 2 m/s for Zurcon® materials
Temperature:	-45 °C to +200 °C (Turcon®) -45 °C to +110 °C (Zurcon® Z51/Z52) -60 °C to +80 °C (Zurcon® Z80) (depending on O-Ring materials)
Media:	Mineral oil-based hydraulic fluids, flame retardant hydraulic fluids, environmentally friendly hydraulic fluids (bio-oils), phosphate ester, water, air and others, depending on the O-Ring material compatibility.

IMPORTANT NOTE

The above data are maximum values and cannot be used at the same time, e.g. the maximum operating speed depends on material type, pressure, temperature and gap value. Temperature range also depends on media.

INSTALLATION INSTRUCTIONS

Excluder® 2 scrapers can be installed in split and closed grooves (installation dimensions, see Table 149. Installation in closed grooves depends on the rod diameter, profile cross-section of the scraper and on the cord cross-section of the corresponding O-Ring, see Table 151.

Table 149: Installation in Closed Grooves

Turcon® Excluder® 2 Series No.	Rod Diameter d_N	O-Ring Cross-Section d_2
WE30	> 30	1.78
WE31	> 30	2.62
WE32	> 40	3.53
WE33	> 50	5.33
WE34	> 110	7.00
WE35	> 140	8.40

RECOMMENDED MATERIALS

The following material combinations have proven effective for hydraulic applications:

Turcon® Excluder® 2 in Turcon® M12
All round material for light to medium hydraulic applications with linear, short stroke or helical movements in mineral oils, flame retardant hydraulic fluids, phosphate ester, bio-oils or fluids having low lubricating properties:

O-Ring:	NBR 70 Shore A	N
	FKM 70 Shore A	V
Set code:	M12N or M12V	

Turcon® Excluder® 2 in Turcon® T46
For medium to heavy applications with linear movements in mineral oils and other media with good lubrication:

O-Ring:	NBR 70 Shore A	N
	FKM 70 Shore A	V
Set code:	T46N or T46V	

For specific applications, all Turcon® materials are available.

Other material combinations are listed in Table 150.

Table 150: Turcon® and Zurcon® Materials for Excluder® 2

Material, Applications, Properties	Code	O–Ring Material Shore A	Code	O-Ring Operating Temp.* °C	Mating Surface Material	Speed max. m/s
Turcon® M12 First material choice for linear motion Overall improved properties For new constructions and updating For all commonly applied hydraulic fluids including fluids with low lubrication performance Lowest friction and best sliding properties Lowest wear on scrapers Improved absorption of abrasive contaminants Low wear or abrasion of counter surface BAM tested Mineral fiber and Additives filled Color: Dark gray	M12	NBR 70	N	-30 to +100	Steel Steel, hardened Steel, chrome plated (rod) Steel plated Cast iron Stainless steel Titanium	15
		NBR 70 Low temp.	T	-45 to +80		
		FKM 70	V	-10 to +200		
Turcon® T40 For lubricating and non-lubricating fluids High frequency and short strokes Water hydraulics Surface texture is not suitable for gas sealing Carbon fiber filled Color: Gray	T40	NBR 70	N	-30 to +100	Steel Steel, chrome plated (rod) Cast iron Stainless steel Aluminum	15
		NBR 70 Low temp.	T	-45 to +80		
		FKM 70	V	-10 to +200		
		EPDM 70	E**	-45 to +145		

Table continous on next page

Material, Applications, Properties	Code	O–Ring Material Shore A	Code	O-Ring Operating Temp.* °C	Mating Surface Material	Speed max. m/s
Turcon® T46 For lubricated hydraulics in linear motion High compressive strength High extrusion resistance Very good sliding and wear properties BAM tested Bronze filled Color: Light to dark brown, which may have variations in shading.	T46	NBR 70	N	-30 to +100	Steel, hardened Steel, chrome plated (rod) Cast iron	15
		NBR 70 Low temp.	T	-45 to +80		
		FKM 70	V	-10 to +200		
Zurcon® Z51*** For mineral oil based fluids Very high abrasion and extrusion resistance For counter surface with rougher surface finish More difficult to install Limited chemical resistance Max. working temperature +110 °C Cast polyurethane Color: Yellow to light-brown	Z51	NBR 70	N	-30 to +100	Steel Steel, hardened Cast iron Ceramic coating Stainless steel	2
		NBR 70 Low temp.	T	-45 to +80		
Zurcon® Z52*** For mineral oil based fluids High abrasion resistance For counter surface with rougher surface finish Good extrusion resistance Limited chemical resistance Max. working temperature +110 °C Cast polyurethane Color: Turquoise	Z52	NBR 70	N	-30 to +100	Steel Steel, hardened Steel, chrome plated (rod) Cast iron Stainless steel Aluminum	2
		NBR 70 Low temp.	T	-45 to +80		
Zurcon® Z80 For lubricating and non-lubricating fluids Water based fluids, air and gases Dry air pneumatics High abrasion and extrusion resistance For service in abrasive conditions and media with particles Good chemical resistance Limited temperature capability (-60 to +80 °C) UHMWPE (Ultra High Molecular Weight Polyethylene)	Z80	NBR 70	N	-30 to (+100)	Steel Steel, chrome plated (rod) Stainless steel Aluminum Ceramic coating	2
		NBR 70 Low temp.	T	-45 to +80		
		EPDM 70	E**	-45 to (+145)		

* The O-Ring operating temperatures are only valid in mineral hydraulic oil (except EPDM).

** Material not suitable for mineral oils.

*** Max. diameter 2200

BAM: Tested by "Bundesanstalt Materialprüfung, Germany".

Highlighted materials are recommended.

Installation Recommendation

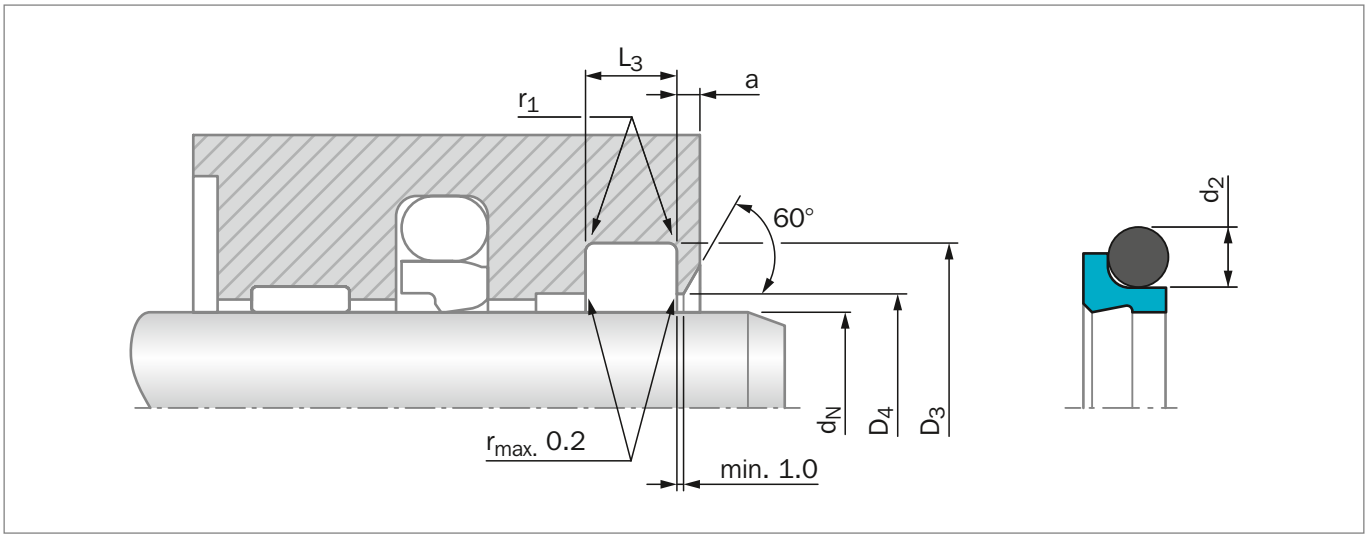

Figure 163: Installation Drawing

Table 151: Installation Dimension - Standard Recommendations

Series No.	Rod Diameter d_N f8/h9		Groove Diameter	Groove Width	Bore Diameter	Step Width	Radius	O-Ring Cross-Section
	Standard Application	Available Range	D_3 H9	L_3 +0.2/-0.0	D_4 H11	$a_{min.}$	$r_{1\ max}$	d_2
WE30	4 – 11.9	4 – 130	d_N + 4.8	3.7	d_N + 1.5	2.0	0.4	1.78
WE31	12 – 64.9	10 – 245	d_N + 6.8	5.0	d_N + 1.5	2.0	0.8	2.62
WE32	65 – 250.9	25 – 400	d_N + 8.8	6.0	d_N + 1.5	3.0	1.0	3.53
WE33	251 – 420.9	40 – 655	d_N + 12.2	8.4	d_N + 2.0	4.0	1.5	5.33
WE34	421 – 650.9	110 – 655	d_N + 16.0	11.0	d_N + 2.0	4.0	1.5	7.00
WE35	651 – 999.9	140 – 999.9	d_N + 20.0	14.0	d_N + 2.5	5.0	2.0	8.40
WE35X	1000 - 2600		d_N + 20.0	14.0	d_N + 2.5	5.0	2.0	8.40

For diameters d_N > 400 mm we recommend the use of Turcon® Excluder® 5.

ORDERING EXAMPLE

Turcon® Excluder® 2 complete with O-Ring, standard application:

Series:	WE31 from Table 151
Rod Diameter:	d_N = 50.0 mm
TSS Part No.:	WE3100500 from Table 152

Select the material from Table 150. The corresponding code numbers are appended to the TSS Part No. Together these form the TSS Article Number. The TSS Article Number for all intermediate sizes can be determined by following the example:

TSS Article No. **WE31 0 0500 - M12 N**

- TSS Series No. — WE31
- Type (Standard) — 0
- Rod Diameter x 10* — 0500
- Quality Index (Standard) — -
- Material Code (Scraper) — M12
- Material Code (O-Ring) — N

* For diameters $d_N \geq$ 1000.0 mm multiply only by factor 1.
Example: WE35 for diameter d_N = 1200.0 mm
TSS Article No.: WE35**X1200**-M12N

Table 152: Installation Dimensions / TSS Part Numbers

Rod Dia. d_N f8/h9	Groove Dia. D_3 H9	Groove Width L_3 +0.2	TSS Part No.	O-Ring Size
4.0*	**8.8**	**3.7**	**WE3000040**	**5.60 x 1.80**
5.0*	**9.8**	**3.7**	**WE3000050**	**6.70 x 1.80**
6.0*	**10.8**	**3.7**	**WE3000060**	**7.65 x 1.78**
8.0*	**12.8**	**3.7**	**WE3000080**	**9.50 x 1.80**
10.0*	**14.8**	**3.7**	**WE3000100**	**11.8 x 1.80**
12.0*	**18.8**	**5.0**	**WE3100120**	**13.94 x 2.62**
14.0*	**20.8**	**5.0**	**WE3100140**	**15.54 x 2.62**
15.0	21.8	5.0	WE3100150	17.12 x 2.62
16.0	**20.8**	**3.7**	**WE3000160**	**17.17 x 1.78**
16.0*	**22.8**	**5.0**	**WE3100160**	**18.00 x 2.65**
17.8	24.6	5.0	WE3100178	20.29 x 2.65
18.0	**22.8**	**3.7**	**WE3000180**	**19.00 x 1.80**
18.0*	**24.8**	**5.0**	**WE3100180**	**20.29 x 2.62**
20.0	**24.8**	**3.7**	**WE3000200**	**21.95 x 1.78**
20.0*	**26.8**	**5.0**	**WE3100200**	**21.89 x 2.62**
22.0	**26.8**	**3.7**	**WE3000220**	**23.52 x 1.78**
22.0*	**28.8**	**5.0**	**WE3100220**	**23.47 x 2.62**
24.0	30.8	5.0	WE3100240	26.64 x 2.62
25.0*	**31.8**	**5.0**	**WE3100250**	**26.64 x 2.62**
28.0*	**34.8**	**5.0**	**WE3100280**	**29.82 x 2.62**
29.8	36.6	5.0	WE3100298	31.42 x 2.62
30.0	34.8	3.7	WE3000300	31.47 x 1.78
30.0	36.8	5.0	WE3100300	31.42 x 2.62
32.0*	**38.8**	**5.0**	**WE3100320**	**34.59 x 2.62**
33.0	37.8	3.7	WE3000330	34.65 x 1.78
34.8	41.6	5.0	WE3100348	36.17 x 2.62
35.0	39.8	3.7	WE3000350	34.65 x 1.78
35.0	41.8	5.0	WE3100350	36.17 x 2.62
36.0*	**42.8**	**5.0**	**WE3100360**	**37.77 x 2.62**
37.0	43.8	5.0	WE3100370	39.34 x 2.62
40.0*	**46.8**	**5.0**	**WE3100400**	**42.52 x 2.62**
42.0	48.8	5.0	WE3100420	44.12 x 2.62
42.8	49.6	5.0	WE3100428	44.12 x 2.62
44.0	48.8	3.7	WE3000440	44.17 x 1.78
45.0*	**49.8**	**3.7**	**WE3000450**	**47.35 x 1.78**
45.0	51.8	5.0	WE3100450	47.29 x 2.62
49.0	55.8	5.0	WE3100490	50.47 x 2.62
50.0*	**56.8**	**5.0**	**WE3100500**	**52.07 x 2.62**
50.0	**62.2**	**8.4**	**WE3300500**	**53.34 x 5.33**
54.0	60.8	5.0	WE3100540	55.25 x 2.62

Rod Dia. d_N f8/h9	Groove Dia. D_3 H9	Groove Width L_3 +0.2	TSS Part No.	O-Ring Size
55.0	61.8	5.0	WE3100550	56.82 x 2.62
56.0*	**62.8**	**5.0**	**WE3100560**	**58.42 x 2.62**
58.0	64.8	5.0	WE3100580	59.99 x 2.62
60.0	66.8	5.0	WE3100600	61.60 x 2.62
63.0*	**69.8**	**5.0**	**WE3100630**	**64.77 x 2.62**
65.0	73.8	6.0	WE3200650	66.27 x 3.53
70.0	**78.8**	**6.0**	**WE3200700**	**72.62 x 3.53**
73.0	81.8	6.0	WE3200730	75.79 x 3.53
75.0	83.8	6.0	WE3200750	75.79 x 3.53
80.0	**88.8**	**6.0**	**WE3200800**	**82.14 x 3.53**
81.0	89.8	6.0	WE3200810	82.14 x 3.53
85.0	93.8	6.0	WE3200850	85.32 x 3.53
86.0	94.8	6.0	WE3200860	88.49 x 3.53
88.0	96.8	6.0	WE3200880	88.49 x 3.53
90.0	**98.8**	**6.0**	**WE3200900**	**91.67 x 3.53**
95.0	103.8	6.0	WE3200950	98.02 x 3.53
100.0	**108.8**	**6.0**	**WE3201000**	**101.19 x 3.53**
105.0	113.8	6.0	WE3201050	107.54 x 3.53
110.0	**118.8**	**6.0**	**WE3201100**	**110.72 x 3.53**
115.0	123.8	6.0	WE3201150	117.07 x 3.53
120.0	128.8	6.0	WE3201200	120.24 x 3.53
125.0	**133.8**	**6.0**	**WE3201250**	**126.59 x 3.53**
130.0	138.8	6.0	WE3201300	132.94 x 3.53
135.0	143.8	6.0	WE3201350	136.12 x 3.53
137.0	145.8	6.0	WE3201370	139.29 x 3.53
140.0	**148.8**	**6.0**	**WE3201400**	**142.47 x 3.53**
145.0	153.8	6.0	WE3201450	145.64 x 3.53
150.0	158.8	6.0	WE3201500	151.99 x 3.53
150.0	162.2	8.4	WE3301500	151.77 x 5.33
160.0	**168.8**	**6.0**	**WE3201600**	**158.34 x 3.53**
170.0	178.8	6.0	WE3201700	171.04 x 3.53
180.0	**188.8**	**6.0**	**WE3201800**	**177.39 x 3.53**
190.0	198.8	6.0	WE3201900	190.09 x 3.53
200.0	**208.8**	**6.0**	**WE3202000**	**202.79 x 3.53**
210.0	218.8	6.0	WE3202100	209.14 x 3.53
220.0	**228.8**	**6.0**	**WE3202200**	**221.84 x 3.53**
230.0	238.8	6.0	WE3202300	228.19 x 3.53
240.0	248.8	6.0	WE3202400	240.89 x 3.53
250.0	**258.8**	**6.0**	**WE3202500**	**253.59 x 3.53**
260.0	272.2	8.4	WE3302600	253.37 x 5.33

Rod Dia.	Groove Dia.	Groove Width	TSS Part No.	O-Ring Size
d_N f8/h9	D_3 H9	L_3 +0.2		
280.0	**292.2**	**8.4**	**WE3302800**	**278.77 x 5.33**
300.0	312.2	8.4	WE3303000	304.17 x 5.33
320.0	**332.2**	**8.4**	**WE3303200**	**329.57 x 5.33**
350.0	362.2	8.4	WE3303500	354.97 x 5.33
360.0	**372.2**	**8.4**	**WE3303600**	**354.97 x 5.33**
370.0	382.2	8.4	WE3303700	365.00 x 5.30
400.0	412.2	8.4	WE3304000	405.26 x 5.33
500.0	516.0	11.0	WE3405000	494.16 x 7.00
600.0	616.0	11.0	WE3406000	608.08 x 7.00
700.0	720.0	14.0	WE3507000	705 x 8.40
800.0	820.0	14.0	WE3508000	805 x 8.40
900.0	920.0	14.0	WE3509000	905 x 8.40
1200.0	1220.0	14.0	WE35X1200	1205 x 8.40
1800.0	1820.0	14.0	WE35X1800	1805 x 8.40
2600.0	2620.0	14.0	WE35X2600	2605 x 8.40

The rod diameters in **bold** type comply with the recommendations of ISO 3320.

* Installation in grooves according to ISO 6195 Type D

Turcon® Excluder® 5

Double-acting

Rubber-energized Double-acting Scraper

Material:
Turcon®, Zurcon® and Elastomer

Turcon® Excluder® 5*

Description

Turcon® Excluder® 5 is a patented double-acting scraper with scraper lip respectively sealing lip, positioned back-to-back. The scraper is installed with an O-Ring as elastic energizing element in one groove. The scraper function is performed by the Excluder® 5 Turcon® element. The O-Ring maintains the pressure of the scraper lips against the sliding surface and can compensate deflections of the piston rod.

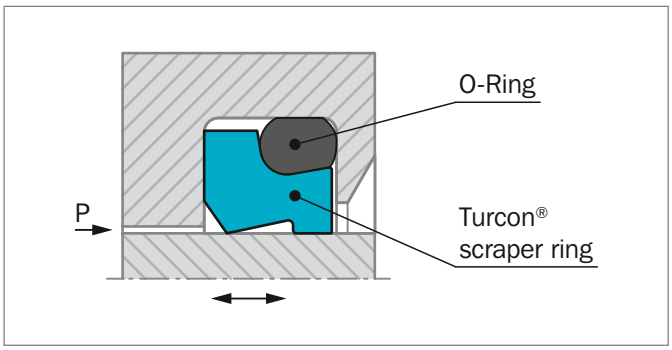

Figure 164: Turcon® Excluder® 5

Excluder® 5 has two functions:

- Scrape contaminants from the retracting piston rod to protect the system from soiling
- Hold back the residual oil film on the extending piston rod on the medium side.

Excluder® 5 is used in conjunction with our rod seals Turcon® Stepseal® 2K, Turcon® VL Seal® or Zurcon® Rimseal, i.e. seals with a hydrodynamic back-pumping function. In contrast to Excluder® 2, they are used particularly for heavy-duty applications such as in construction machinery, presses, etc.

ADVANTAGES

- Outstanding sliding properties
- Stick-slip-free, no sticking (Turcon® material)
- Tough scraper for heavy-duty operation
- Can compensate for deflections of the piston rod or plunger
- Very good scraping effect even against firmly adhered dirt, etc.
- Very good scraping effect from the inside against the residual oil film adhering to the surface of the piston rod
- Identical installation with that of the Zurcon® Excluder® 500
- Very high resistance to hydraulic media
- Available for all diameters up to 2600 mm (Turcon®), up to 2200 mm (Zurcon® Z51/Z52).
- ISO 6195 Type D installation dimensions from diameter 40 mm

OPERATING CONDITIONS

Speed:	Up to 15 m/s for Turcon® materials Up to 2 m/s for Zurcon® materials
Temperature:	-45 °C to +200 °C (Turcon®) -45 °C to +110 °C (Zurcon® Z51/Z52) -60 °C to +80 °C (Zurcon® Z80) depending on O-Ring material
Media:	Mineral oil-based hydraulic fluids, flame retardant hydraulic fluids, environmentally friendly hydraulic fluids (bio-oils), phosphate ester, water, air and others, depending on the scraper and O-Ring material compatibility.

IMPORTANT NOTE

The above data are maximum values and cannot be used at the same time, e.g. the maximum operating speed depends on material type, pressure, temperature and gap value. Temperature range also depends on media.

INSTALLATION INSTRUCTIONS

Excluder® 5 scrapers can be installed in split and closed grooves installation dimensions, see Table 153.

Installation in closed grooves depends on the rod diameter, profile cross-section of the scraper and on the cross-section of the corresponding O-Ring, see Table 155.

Table 153: Installation in Closed Grooves

Turcon® Excluder® 5 Series No.	Rod Diameter d_N	O-Ring Cross-Section d_2
WE50	> 30.0	2.62
WE51	> 40.0	2.62
WE52	> 70.0	3.53
WE53	> 100.0	5.33
WE54	> 140.0	7.00
WE55	> 180.0	8.40

* Patent-No. EP 023 5568

RECOMMENDED MATERIALS

The following material combinations have proven effective for most applications:

Turcon® Excluder® 5 in Turcon® M12
All round material for light to heavy hydraulic applications with linear, short stroke or helical movements in mineral oils, flame retardant hydraulic fluids, phosphate ester, bio-oils or fluids having low lubricating properties:

O-Ring:	NBR 70 Shore A	N
	FKM 70 Shore A	V
Set code:	M12N or M12V	

Turcon® Excluder® 5 in Turcon® T46
For medium to heavy applications with linear movements in mineral oils and other media with good lubrication:

O-Ring:	NBR 70 Shore A	N
	FKM 70 Shore A	V
Set code:	T46N or T46V	

For specific applications, all Turcon® materials are available.

Other material combinations are listed in Table 154.

Table 154: Turcon® and Zurcon® Materials for Excluder® 5

Material, Applications, Properties	Code	O–Ring Material Shore A	Code	O-Ring Operating Temp.* °C	Mating Surface Material	Speed max. m/s
Turcon® M12 First material choice for linear motion Overall improved properties For new constructions and updating For all commonly applied hydraulic fluids including fluids with low lubrication performance Lowest friction and best sliding properties Lowest wear on scrapers Improved absorption of abrasive contaminants Low wear or abrasion of counter surface BAM tested Mineral fiber and Additives filled Color: Dark gray	M12	NBR 70	N	-30 to +100	Steel Steel, hardened Steel, chrome plated (rod) Cast iron Stainless steel Titanium	15
		NBR 70 Low temp.	T	-45 to +80		
		FKM 70	V	-10 to +200		
Turcon® T40 For lubricating and non-lubricating fluids High frequency and short strokes Water hydraulics Surface texture is not suitable for gas sealing Carbon fiber filled Color: Gray	T40	NBR 70	N	-30 to +100	Steel Steel, chrome plated (rod) Cast iron Stainless steel Aluminum	15
		NBR 70 Low temp.	T	-45 to +80		
		FKM 70	V	-10 to +200		
		EPDM 70	E**	-45 to +145		

Table continues on next page

Material, Applications, Properties	Code	O–Ring Material Shore A	Code	O-Ring Operating Temp.* °C	Mating Surface Material	Speed max. m/s
Turcon® T46 For lubricated hydraulics in linear motion High compressive strength High extrusion resistance Very good sliding and wear properties BAM tested Bronze filled Color: Light to dark brown, which may have variations in shading.	T46	NBR 70	N	-30 to +100	Steel, hardened Steel, chrome plated (rod) Cast iron	15
		NBR 70 Low temp.	T	-45 to +80		
		FKM 70	V	-10 to +200		
Zurcon® Z51*** For mineral oil based fluids Linear and slowly turning movements Very high abrasion and extrusion resistance For counter surface with rougher surface finish More difficult to install Limited chemical resistance Max. working temperature 110 °C Cast polyurethane Color: Yellow to light-brown	Z51	NBR 70	N	-30 to +100	Steel Steel, hardened Cast iron Ceramic coating Stainless steel	2
		NBR 70 Low temp.	T	-45 to +80		
Zurcon® Z52*** For mineral oil based fluids High abrasion resistance For counter surface with rougher surface finish Good extrusion resistance Limited chemical resistance Max. working temperature 110 °C Cast polyurethane Color: Turquoise	Z52	NBR 70	N	-30 to +100	Steel Steel, hardened Steel, chrome plated (rod) Cast iron Stainless steel Aluminum Ceramic coating	1
		NBR 70 Low temp.	T	-45 to +80		
Zurcon® Z80 For lubricating and non-lubricating fluids Water based fluids, air and gases Dry air pneumatics High abrasion and extrusion resistance For service in abrasive conditions and media with particles Good chemical resistance Limited temperature capability (-60 to +80 °C) UHMWPE (Ultra High Molecular Weight Polyethylene)	Z80	NBR 70	N	-30 to (+100)	Steel Steel, chrome plated (rod) Stainless steel Aluminum Ceramic coating	2
		NBR 70 Low temp.	T	-45 to +80		
		EPDM 70	E**	-45 to (+145)		

* The O-Ring Operation Temperature is only valid in mineral hydraulic oil (except EPDM).

** Material not suitable for mineral oils.

*** Max. diameter 2200 mm

BAM: Tested by "Bundesanstalt Materialprüfung, Germany".

Highlighted materials are recommended.

Installation Recommendation

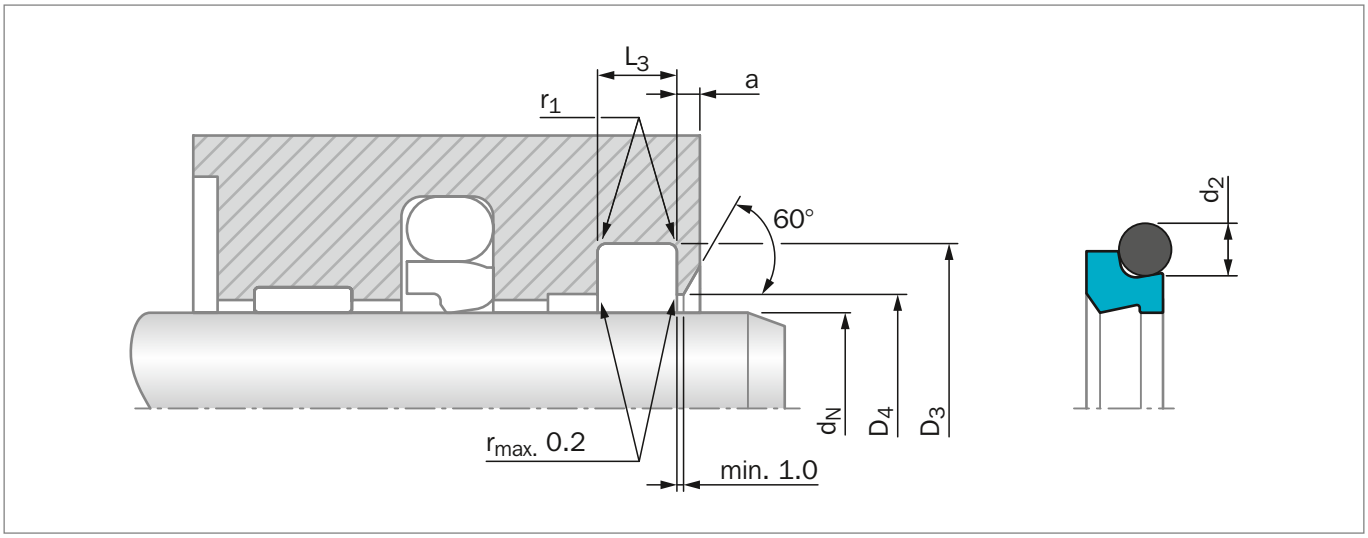

Figure 165: Installation Drawing

Table 155: Installation Dimension

Series No.	Rod Diameter d_N f8/h9		Groove Diameter	Groove Width	Bore Diameter	Step Width	Radius	O-Ring Cross-Section
	Standard Application	Available Range	D_3 H9	L_3 +0.2/-0.0	D_4 H11	a_{min}	$r_{1\ max}$	d_2
WE50	19 – 39.9	19 – 100.0	d_N + 7.6	4.2	d_N + 1.5	3.0	0.8	2.62
WE51	40 – 69.9	30 – 200.0	d_N + 8.8	6.3	d_N + 1.5	3.0	1.0	2.62
WE52	70 – 139.9	50 – 360.0	d_N + 12.2	8.1	d_N + 2.0	4.0	1.0	3.53
WE53	140 – 399.9	100 – 650.0	d_N + 16.0	9.5	d_N + 2.5	5.0	1.5	5.33
WE54	400 – 649.9	200 – 650.0	d_N + 24.0	14.0	d_N + 2.5	8.0	1.5	7.00
WE55	650 – 999.9	400 – 999.9	d_N + 27.3	16.0	d_N + 2.5	10.0	2.0	8.40
WE55X	1000 - 2600		d_N + 27.3	16.0	d_N + 2.5	10.0	2.0	8.40

ORDERING EXAMPLE

Turcon® Excluder® 5 complete with O-Ring, standard application:

Series:	WE51 from Table 155
Rod Diameter:	d_N = 50.0 mm
TSS Part No.:	WE5100500 from Table 156

Select the material from Table 154. The corresponding code numbers are appended to the TSS Part No. Together these form the TSS Article Number. The TSS Article Number for all intermediate sizes can be determined by following the example:

TSS Article No. **WE51 0 0500 - M12 N**

- TSS Series No. — WE51
- Type (Standard) — 0
- Rod Diameter x 10* — 0500
- Quality Index (Standard) — -
- Material Code (Scraper) — M12
- Material Code (O-Ring) — N

* For diameters $d_N \geq 1000.0$ mm multiply only by factor 1.
Example: WE55 for diameter d_N = 1200.0 mm
TSS Article No.: WE55**X1200**-M12N

Table 156: Installation Dimensions / TSS Part Numbers

Rod Dia. d_N f8/h9	Groove Dia. D_3 H9	Groove Width L_3 +0.2	TSS Part No.	O-Ring Size
19.0	26.6	4.2	WE5000190	21.89 x 2.62
20.0	**27.6**	**4.2**	**WE5000200**	**21.89 x 2.62**
22.0	**29.6**	**4.2**	**WE5000220**	**25.07 x 2.62**
25.0	**32.6**	**4.2**	**WE5000250**	**28.24 x 2.62**
28.0	**35.6**	**4.2**	**WE5000280**	**29.82 x 2.62**
30.0	37.6	4.2	WE5000300	32.99 x 2.62
32.0	**39.6**	**4.2**	**WE5000320**	**34.59 x 2.62**
35.0	42.6	4.2	WE5000350	37.77 x 2.62
36.0	**43.6**	**4.2**	**WE5000360**	**37.77 x 2.62**
40.0*	**48.8**	**6.3**	**WE5100400**	**44.12 x 2.62**
42.0	50.8	6.3	WE5100420	45.69 x 2.62
45.0*	**53.8**	**6.3**	**WE5100450**	**48.90 x 2.62**
48.0	56.8	6.3	WE5100480	52.07 x 2.62
50.0*	**58.8**	**6.3**	**WE5100500**	**53.64 x 2.62**
52.0	60.8	6.3	WE5100520	55.25 x 2.62
55.0	63.8	6.3	WE5100550	58.42 x 2.62
56.0*	**64.8**	**6.3**	**WE5100560**	**59.99 x 2.62**
60.0	67.6	4.2	WE5000600	63.17 x 2.62
60.0	68.8	6.3	WE5100600	63.17 x 2.62
63.0*	**71.8**	**6.3**	**WE5100630**	**66.34 x 2.62**
65.0	73.8	6.3	WE5100650	67.95 x 2.62
70.0*	**78.8**	**6.3**	**WE5100700**	**72.69 x 2.62**
70.0*	**82.2**	**8.1**	**WE5200700**	**75.79 x 3.53**
75.0	87.2	8.1	WE5200750	78.97 x 3.53
80.0*	**88.8**	**6.3**	**WE5100800**	**82.22 x 2.62**
80.0*	**92.2**	**8.1**	**WE5200800**	**85.32 x 3.53**
85.0	97.2	8.1	WE5200850	88.49 x 3.53
90.0*	**98.8**	**6.3**	**WE5100900**	**94.92 x 2.62**
90.0*	**102.2**	**8.1**	**WE5200900**	**94.84 x 3.53**
92.5	104.7	8.1	WE5200925	98.02 x 3.53
95.0	107.2	8.1	WE5200950	101.19 x 3.53
100.0*	**108.8**	**6.3**	**WE5101000**	**101.27 x 2.62**
100.0*	**112.2**	**8.1**	**WE5201000**	**104.37 x 3.53**
105.0	117.2	8.1	WE5201050	110.72 x 3.53
110.0*	**118.8**	**6.3**	**WE5101100**	**113.97 x 2.62**
110.0*	**122.2**	**8.1**	**WE5201100**	**113.89 x 3.53**
115.0	127.2	8.1	WE5201150	120.24 x 3.53
120.0	132.2	8.1	WE5201200	123.42 x 3.53
125.0*	**133.8**	**6.3**	**WE5101250**	**126.67 x 2.62**
125.0*	**137.2**	**8.1**	**WE5201250**	**129.77 x 3.53**

Rod Dia. d_N f8/h9	Groove Dia. D_3 H9	Groove Width L_3 +0.2	TSS Part No.	O-Ring Size
125.4	137.6	8.1	WE5201254	129.77 x 3.53
130.0	142.2	8.1	WE5201300	136.12 x 3.53
135.0	147.2	8.1	WE5201350	139.29 x 3.53
140.0*	**152.2**	**8.1**	**WE5201400**	**145.64 x 3.53**
140.0*	**156.0**	**9.5**	**WE5301400**	**145.42 x 5.33**
140.5	156.5	9.5	WE5301405	145.42 x 5.33
150.0	166.0	9.5	WE5301500	151.77 x 5.33
153.0	169.0	9.5	WE5301530	158.12 x 5.33
155.0	171.0	9.5	WE5301550	158.12 x 5.33
160.0*	**172.2**	**8.1**	**WE5201600**	**164.69 x 3.53**
160.0*	**176.0**	**9.5**	**WE5301600**	**164.47 x 5.33**
165.0	181.0	9.5	WE5301650	170.82 x 5.33
170.0	186.0	9.5	WE5301700	177.17 x 5.33
175.0	191.0	9.5	WE5301750	177.17 x 5.33
180.0*	**192.2**	**8.1**	**WE5201800**	**183.74 x 3.53**
180.0*	**196.0**	**9.5**	**WE5301800**	**183.52 x 5.33**
188.2	204.2	9.5	WE5301882	189.87 x 5.33
190.0	206.0	9.5	WE5301900	196.22 x 5.33
200.0*	**212.2**	**8.1**	**WE5202000**	**202.79 x 3.53**
200.0*	**216.0**	**9.5**	**WE5302000**	**202.57 x 5.33**
220.0*	**232.2**	**8.1**	**WE5202200**	**221.84 x 3.53**
220.0*	**236.0**	**9.5**	**WE5302200**	**221.62 x 5.33**
240.0	256.0	9.5	WE5302400	247.02 x 5.33
250.0*	**262.2**	**8.1**	**WE5202500**	**253.59 x 3.53**
250.0*	**266.0**	**9.5**	**WE5302500**	**253.37 x 5.33**
260.0	276.0	9.5	WE5302600	266.07 x 5.33
270.0	286.0	9.5	WE5302700	278.77 x 5.33
280.0*	**292.2**	**8.1**	**WE5202800**	**278.99 x 3.53**
280.0*	**296.0**	**9.5**	**WE5302800**	**278.77 x 5.33**
300.0	316.0	9.5	WE5303000	304.17 x 5.33
320.0*	**332.2**	**8.1**	**WE5203200**	**329.79 x 3.53**
320.0*	**336.0**	**9.5**	**WE5303200**	**329.57 x 5.33**
330.0	346.0	9.5	WE5303300	329.57 x 5.33
350.0	366.0	9.5	WE5303500	354.97 x 5.33
360.0*	**372.2**	**8.1**	**WE5203600**	**355.19 x 3.53**
360.0*	**376.0**	**9.5**	**WE5303600**	**365.00 x 5.30**
380.0	396.0	9.5	WE5303800	380.37 x 5.33
400.0	424.0	14.0	WE5404000	405.26 x 7.00
440.0	464.0	14.0	WE5404400	443.36 x 7.00
450.0	474.0	14.0	WE5404500	456.06 x 7.00

Rod Dia.	Groove Dia.	Groove Width	TSS Part No.	O-Ring Size
d_N f8/h9	D_3 H9	L_3 +0.2		
480.0	504.0	14.0	WE5404800	481.38 x 7.00
500.0	524.0	14.0	WE5405000	506.86 x 7.00
560.0	584.0	14.0	WE5405600	557.66 x 7.00
600.0	624.0	14.0	WE5406000	608.08 x 7.00
650.0	677.3	16.0	WE5506500	662 x 8.40
680.0	707.3	16.0	WE5506800	692 x 8.40
700.0	727.3	16.0	WE5507000	712 x 8.40
750.0	777.3	16.0	WE5507500	762 x 8.40
800.0	827.3	16.0	WE5508000	812 x 8.40
850.0	877.3	16.0	WE5508500	862 x 8.40
900.0	927.3	16.0	WE5509000	912 x 8.40
950.0	977.3	16.0	WE5509500	962 x 8.40
1000.0	1027.3	16.0	WE55X1000	1012 x 8.40
1800.0	1827.3	16.0	WE55X1800	1812 x 8.40
2600.0	2627.3	16.0	WE55X2600	2612 x 8.40

The rod diameters in **bold** type comply with the recommendations of ISO 3320.

* Installation in grooves according to ISO 6195 Type D

Turcon® Excluder® F

Double-acting

Rubber-energized Double-acting Scraper

Material:
Turcon®, Zurcon® and Elastomer

■ Turcon® Excluder® F

■ Description

Turcon® Excluder® F is a double-acting scraper with scraper lip respectively sealing lip, positioned back-to-back. The scraper is always installed with 2 O-Rings as elastic energizing elements in one groove. The scraper function itself is performed by the Excluder® F Turcon® element. The O-Rings maintains the pressure of the scraper lips against the sliding surface and compensates deflections of the piston rod.

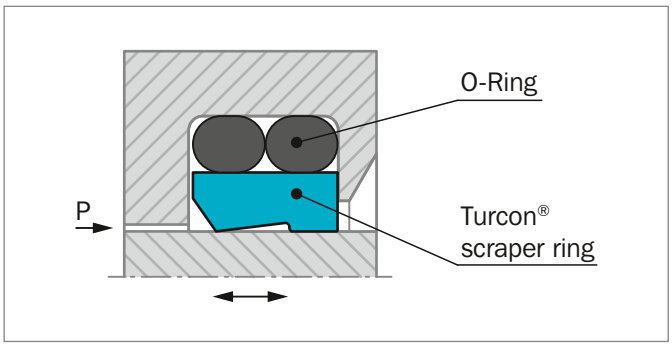

Figure 166: Turcon® Excluder® F

EXCLUDER® F HAS TWO FUNCTIONS:

- Scrape contaminants from the retracting piston rod to protect the system from soiling
- Hold back the residual oil film on the extending piston rod on the medium side.
- Excluder® F is preferably used in conjunction with our rod seals Turcon® Stepseal® 2K or Zurcon® Rimseal, i.e. seals with a hydrodynamic back-pumping function. Application wise the Excluder® F is placed between Excluder® 2 and Excluder® 5 for medium to ”light-heavy” duty such as in:
- Light construction machinery
- Truck crane
- Agriculture machines
- Hydraulic presses
- Injection molding machines
- Hydraulic actuators

ADVANTAGES

In principle the same as for Excluder® 2 and 5:

- Outstanding sliding properties
- Stick-slip-free, no sticking for Turcon® materials
- Tough scraper particular in Zurcon® materials
- Can compensate for deflections of the piston rod or plunger
- Very good scraping effect even against firmly adhered dirt, etc.
- Very good sealing effect from the inside against the residual oil film adhering to the surface of the piston rod
- Identical installation as Zurcon® Excluder® 500 and Excluder® 5 from WE50 to WE52
- Very high resistance to hydraulic media
- Available for diameters from 19 up to 1500 mm
- ISO 6195 Type D installation on recommended diameters from 40 to 140 mm.

DISADVANTAGES ARED

- Require 2 pcs O-Rings
- Not completely axially locked in the groove
- More disposed to wrong installation.

ADVANTAGES ARED

- Easy installation in closed groove
- Improved radial flexibility
- Improved sealing function due to O-Ring arrangement.

OPERATING CONDITIONS

Speed:	15 m/s for Turcon® materials 2 m/s for Zurcon® Z80 materials 1 m/s for Zurcon® Z51/Z52 materials
Temperature:	-45 °C to +200 °C (Turcon®) -60 °C to +80 °C (Zurcon® Z80) -45 °C to +110 °C (Zurcon® Z51/Z52) depending on O-Ring materials
Media:	Mineral oil-based hydraulic fluids, flame retardant hydraulic fluids, environmentally friendly hydraulic fluids (bio-oils), phosphate ester, water, air and others, depending on scraper and O-ring material compatibility.

IMPORTANT NOTE

The above data are maximum values and cannot be used at the same time, e.g. the maximum operating speed depends on material type, environment, temperature and media.

INSTALLATION INSTRUCTIONS

All Excluder® F scrapers are preferably installed in closed grooves - installation dimensions see Table 158.

MATERIALS

The following material combinations have proven effective for most applications:

Turcon® Excluder® F in Turcon® M12
All round material for hydraulic applications with linear, short stroke or helical movements in mineral oils, flame retardant hydraulic fluids, phosphate ester, bio-oils or fluids having low lubricating properties:

O-Ring:	NBR 70 Shore A	N
	FKM 70 Shore A	V

Set code: M12N or M12V

Turcon® Excluder® F in Turcon® T46
For medium to heavy applications with linear movements in mineral oils and other media with good lubrication:

O-Ring:	NBR 70 Shore A	N
	FKM 70 Shore A	V

Set code: T46N or T46V

For specific applications, all Turcon® materials are available.

Other material combinations are listed in Table 157.

Table 157: Turcon® and Zurcon® Materials for Excluder® F

Material, Applications, Properties	Code	O–Ring Material Shore A	Code	O-Ring Operating Temp.* °C	Mating Surface Material	Speed max. m/s
Turcon® M12 First material choice for linear motion Overall improved properties For new constructions and updating For all commonly applied hydraulic fluids including fluids with low lubrication performance Lowest friction and best sliding properties Lowest wear on scrapers Improved absorption of abrasive contaminants Low wear or abrasion of counter surface BAM tested Mineral fiber and Additives filled Color: Dark gray	M12	NBR 70	N	-30 to +100	Steel Steel, hardened Steel, chrome plated (rod) Steel plated (rod) Cast iron Stainless steel Titanium	15
		NBR 70 Low temp.	T	-45 to +80		
		FKM 70	V	-10 to +200		
Turcon® T40 For lubricating and non-lubricating fluids High frequency and short strokes Water hydraulics Surface texture is not suitable for gas Carbon fiber filled Color: Gray	T40	NBR 70	N	-30 to +100	Steel Steel, chrome plated (rod) Cast iron Stainless steel Aluminum	15
		NBR 70 Low temp.	T	-45 to +80		
		FKM 70	V	-10 to +200		
		EPDM 70	E**	-45 to +145		
Turcon® T46 For lubricated hydraulics in linear motion High compressive strength High extrusion resistance Very good sliding and wear properties BAM tested Bronze filled Color: Light to dark brown, which may have variations in shading.	T46	NBR 70	N	-30 to +100	Steel, hardened Steel, chrome plated (rod) Cast iron	15
		NBR 70 Low temp.	T	-45 to +80		
		FKM 70	V	-10 to +200		
Zurcon® Z51 For mineral oil based fluids Very high abrasion and extrusion resistance For counter surface with rougher surface finish More difficult to install Limited chemical resistance Max. working temperature +110 °C Cast polyurethane Color: Yellow to light-brown	Z51	NBR 70	N	-30 to +100	Steel Steel, hardened Cast iron Ceramic coating Stainless steel	1
		NBR 70 Low temp.	T	-45 to +80		

Table continues on next page

Material, Applications, Properties	Code	O–Ring Material Shore A	Code	O-Ring Operating Temp.* °C	Mating Surface Material	Speed max. m/s
Zurcon® Z52 For mineral oil based fluids High abrasion resistance For counter surface with rougher surface finish Good extrusion resistance Limited chemical resistance Max. working temperature +110 °C Cast polyurethane Color: Turquoise	**Z52**	NBR 70	N	-30 to +100	Steel Steel, hardened Steel, chrome plated (rod) Cast iron Stainless steel Aluminum Ceramic coating	1
		NBR 70 Low temp.	T	-45 to +80		
Zurcon® Z80 For lubricating and non-lubricating fluids Water based fluids, air and gases Dry air pneumatics High abrasion and extrusion resistance For service in abrasive conditions and media with particles Good chemical resistance Limited temperature capability (-60 to +80 °C) UHMWPE (Ultra High Molecular Weight Polyethylene)	**Z80**	NBR 70	N	-30 to +100	Steel Steel, chrome plated (rod) Stainless steel Aluminum Ceramic coating	2
		NBR 70 Low temp.	T	-45 to +80		
		EPDM 70	E**	-45 to +145		

* The O-Ring Operation Temperature is only valid in mineral hydraulic oil, except EPDM.

** Material not suitable for mineral oils.

BAM: Tested by "Bundesanstalt Materialprüfung, Germany".

Highlighted materials are recommended.

Installation Recommendation

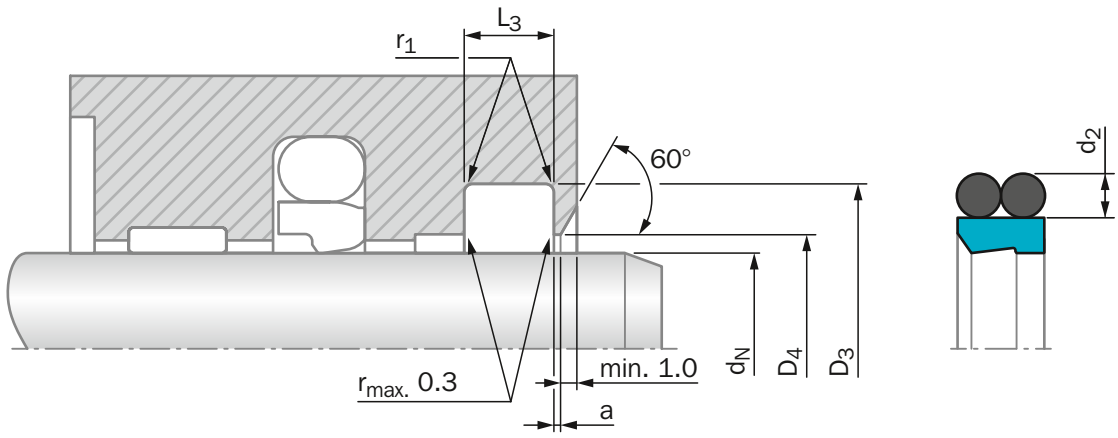

Figure 167: Installation Drawing

Table 158: Installation Dimensions – Standard Recommendations

Series No.	Rod d_N f8/h9		Groove Diameter	Groove Width	Bore Diameter	Step Width	Radius	O-Ring Cross-Section
	Standard Application	Available Range	D_3 H9	L_3 +0.2	D_4 H11	a_{min}	$r_{1\ max}$	d_2
WEF0	19 - 39.9	19 - 130	d_N + 7.6	4.2	d + 1.0	3.0	0.4	1.78
WEF1	40 - 69.9	30 - 250	d_N + 8.8	6.3	d + 1.5	3.0	1.0	2.62
WEF2	70 - 139.9	50 - 450	d_N + 12.2	8.1	d + 2.0	5.0	1.2	3.53
WEF3	140 - 399.9	80 - 650	d_N + 16.0	11.5	d + 2.0	5.0	2.0	5.33
WEF4	400 - 649.9	180 - 650	d_N + 24.0	15.5	d + 2.5	8.0	2.5	7.00
WEF5	650 - 999.9	300 - 999.9	d_N + 27.3	18.0	d + 2.5	10.0	2.5	8.40
WEF5X	1000 - 1500		d_N + 27.3	18.0	d + 2.5	10.0	2.5	8.40

ORDERING EXAMPLE

Turcon® Excluder® F complete with O-Ring, standard application:

Series:	WEF1 from Table 158
Rod Diameter:	d_N = 50.0 mm
TSS Part No.:	WEF100500 from Table 159

Select the material from Table 157. The corresponding code numbers are appended to the TSS Part No. Together these form the TSS Article Number. The TSS Article Number for all intermediate sizes can be determined by following the example:

TSS Article No. **WEF1 0 0500 - M12 N**

- TSS Series No. — WEF1
- Type (Standard) — 0
- Rod Diameter x 10* — 0500
- Quality Index (Standard) — -
- Material Code (Seal Ring) — M12
- Material Code (O-Ring) — N

* For diameters $d_N \geq 1000.0$ mm multiply only by factor 1.
Example: WEF5 for diameter d_N = 1200.0 mm
TSS Article No.: WEF5**X1200**-M12N

Table 159: Installation Dimensions / TSS Part Numbers

Rod Dia. d_N f8/h9	Groove Dia. D_3 H9	Groove Width L_3 +0.2	TSS Part No.	O-Ring Size
19.0	26.6	4.2	WEF000190	23.52 x 1.78
20.0	**27.6**	**4.2**	**WEF000200**	**23.52 x 1.78**
22.0	**29.6**	**4.2**	**WEF000220**	**26.70 x 1.78**
25.0	**32.6**	**4.2**	**WEF000250**	**28.30 x 1.78**
28.0	**35.6**	**4.2**	**WEF000280**	**31.47 x 1.78**
30.0	37.6	4.2	WEF000300	34.65 x 1.78
32.0	**39.6**	**4.2**	**WEF000320**	**34.65 x 1.78**
35.0	42.6	4.2	WEF000350	37.82 x 1.78
36.0	**43.6**	**4.2**	**WEF000360**	**41.00 x 1.78**
40.0*	**48.8**	**6.3**	**WEF100400**	**44.12 x 2.62**
42.0	50.8	6.3	WEF100420	45.69 x 2.62
45.0*	**53.8**	**6.3**	**WEF100450**	**48.90 x 2.62**
48.0	56.8	6.3	WEF100480	52.07 x 2.62
50.0*	**58.8**	**6.3**	**WEF100500**	**53.64 x 2.62**
52.0	60.8	6.3	WEF100520	55.25 x 2.62
55.0	63.8	6.3	WEF100550	58.42 x 2.62
56.0*	**64.8**	**6.3**	**WEF100560**	**59.99 x 2.62**
60.0	67.6	4.2	WEF000600	63.22 x 1.78
60.0	68.8	6.3	WEF100600	63.17 x 2.62
63.0*	**71.8**	**6.3**	**WEF100630**	**66.34 x 2.62**
65.0	73.8	6.3	WEF100650	67.95 x 2.62
70.0*	**78.8**	**6.3**	**WEF100700**	**72.69 x 2.62**
70.0*	**82.2**	**8.1**	**WEF200700**	**75.79 x 3.53**
75.0	87.2	8.1	WEF200750	78.97 x 3.53
80.0*	**88.8**	**6.3**	**WEF100800**	**82.22 x 2.62**
80.0*	**92.2**	**8.1**	**WEF200800**	**85.32 x 3.53**
85.0	97.2	8.1	WEF200850	88.49 x 3.53
90.0*	**98.8**	**6.3**	**WEF100900**	**94.92 x 2.62**
90.0*	**102.2**	**8.1**	**WEF200900**	**94.84 x 3.53**
92.5	104.7	8.1	WEF200925	98.02 x 3.53
95.0	107.2	8.1	WEF200950	101.19 x 3.53
100.0*	**108.8**	**6.3**	**WEF101000**	**101.27 x 2.62**
100.0*	**112.2**	**8.1**	**WEF201000**	**104.37 x 3.53**
105.0	117.2	8.1	WEF201050	110.72 x 3.53
110.0*	**118.8**	**6.3**	**WEF101100**	**113.97 x 2.62**
110.0*	**122.2**	**8.1**	**WEF201100**	**113.89 x 3.53**
115.0	127.2	8.1	WEF201150	120.24 x 3.53
120.0	132.2	8.1	WEF201200	123.42 x 3.53
125.0*	**133.8**	**6.3**	**WEF101250**	**126.67 x 2.62**
125.0*	**137.2**	**8.1**	**WEF201250**	**129.77 x 3.53**

Rod Dia. d_N f8/h9	Groove Dia. D_3 H9	Groove Width L_3 +0.2	TSS Part No.	O-Ring Size
125.4	137.6	8.1	WEF201254	129.77 x 3.53
130.0	142.2	8.1	WEF201300	136.12 x 3.53
135.0	147.2	8.1	WEF201350	139.29 x 3.53
140.0*	**152.2**	**8.1**	**WEF201400**	**145.64 x 3.53**
140.0*	**156.0**	**11.5**	**WEF301400**	**145.42 x 5.33**
140.5	156.5	11.5	WEF301405	145.42 x 5.33
150.0	166.0	11.5	WEF301500	151.77 x 5.33
153.0	169.0	11.5	WEF301530	158.12 x 5.33
155.0	171.0	11.5	WEF301550	158.12 x 5.33
160.0*	**172.2**	**8.1**	**WEF201600**	**164.69 x 3.53**
160.0*	**176.0**	**11.5**	**WEF301600**	**164.47 x 5.33**
165.0	181.0	11.5	WEF301650	170.82 x 5.33
170.0	186.0	11.5	WEF301700	177.17 x 5.33
175.0	191.0	11.5	WEF301750	177.17 x 5.33
180.0*	**192.2**	**8.1**	**WEF201800**	**183.74 x 3.53**
180.0*	**196.0**	**11.5**	**WEF301800**	**183.52 x 5.33**
188.2	204.2	11.5	WEF301882	189.87 x 5.33
190.0	206.0	11.5	WEF301900	196.22 x 5.33
200.0*	**212.2**	**8.1**	**WEF202000**	**202.79 x 3.53**
200.0*	**216.0**	**11.5**	**WEF302000**	**202.57 x 5.33**
220.0*	**232.2**	**8.1**	**WEF202200**	**221.84 x 3.53**
220.0*	**236.0**	**11.5**	**WEF302200**	**221.62 x 5.33**
240.0	256.0	11.5	WEF302400	247.02 x 5.33
250.0*	**262.2**	**8.1**	**WEF202500**	**253.59 x 3.53**
250.0*	**266.0**	**11.5**	**WEF302500**	**253.37 x 5.33**
260.0	276.0	11.5	WEF302600	266.07 x 5.33
270.0	286.0	11.5	WEF302700	278.77 x 5.33
280.0*	**292.2**	**8.1**	**WEF202800**	**278.99 x 3.53**
280.0*	**296.0**	**11.5**	**WEF302800**	**278.77 x 5.33**
300.0	316.0	11.5	WEF303000	304.17 x 5.33
320.0*	**332.2**	**8.1**	**WEF203200**	**329.79 x 3.53**
320.0*	**336.0**	**11.5**	**WEF303200**	**329.57 x 5.33**
330.0	346.0	11.5	WEF303300	329.57 x 5.33
350.0	366.0	11.5	WEF303500	354.97 x 5.33
360.0*	**372.2**	**8.1**	**WEF203600**	**355.19 x 3.53**
360.0*	**376.0**	**11.5**	**WEF303600**	**365.00 x 5.30**
380.0	396.0	11.5	WEF303800	380.37 x 5.33
400.0	424.0	15.5	WEF404000	405.26 x 7.00
440.0	464.0	15.5	WEF404400	443.36 x 7.00
450.0	474.0	15.5	WEF404500	456.06 x 7.00

Rod Dia.	Groove Dia.	Groove Width	TSS Part No.	O-Ring Size
d_N f8/h9	D_3 H9	L_3 +0.2		
480.0	504.0	15.5	WEF404800	481.38 x 7.00
500.0	524.0	15.5	WEF405000	506.86 x 7.00
550.0	574.0	15.5	WEF405500	557.66 x 7.00
600.0	624.0	15.5	WEF406000	608.08 x 7.00
650.0	677.3	18.0	WEF506500	662 x 8.40
700.0	727.3	18.0	WEF507000	712 x 8.40
750.0	777.3	18.0	WEF507500	762 x 8.40
800.0	827.3	18.0	WEF508000	812 x 8.40
900.0	927.3	18.0	WEF509000	912 x 8.40
1000.0	1027.3	18.0	WEF5X1000	1012 x 8.40
1100.0	1127.3	18.0	WEF5X1100	1112 x 8.40
1200.0	1227.3	18.0	WEF5X1200	1212 x 8.40

The rod diameters in **bold** type comply with the recommendations of ISO 3320.

*) Installation in grooves according to ISO 6195 Type D

Other dimensions and all intermediate sizes up to 1500 mm diameter including imperial (inch) sizes can be supplied upon request.

Turcon® Excluder® S

Double-acting

Rubber-energized Double-acting Scraper

Material:
Turcon®, Zurcon®, Elastomer and Metal

Turcon® Excluder® S

Description

Turcon® Excluder® S is a double-acting scraper with scraper lip and sealing lip, positioned back-to-back. Excluder® S element is as standard always installed with a metal V-Spring and an O-Ring.

The V-Spring in the external part maintains a permanent pressure on the scraping edge. The internal O-Ring activates the sealing lip.

The V-Spring is filled with high temperature silicone to prevent contamination blocking the spring.

The conical front guides contamination away from the reciprocating rod. This is especially important when the piston rod is pointing upwards.

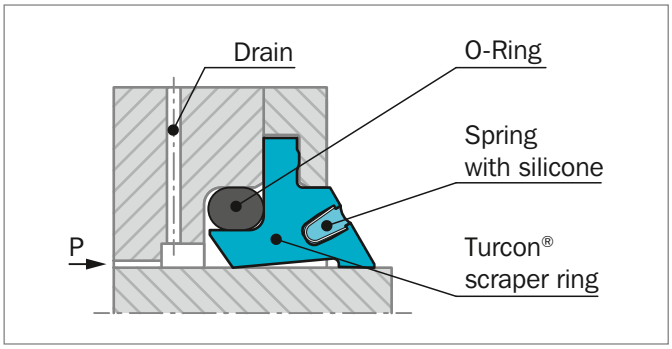

Figure 168: Turcon® Excluder® S with V-Spring activated lip

EXCLUDER® S HAS TWO FUNCTIONS:

- Scrape contaminants from the retracting piston rod protecting the system from soiling
- Hold back the residual fluid film on the extending piston rod at the fluid side.

APPLICATIONS

Excluder® S is preferably used in very dirty environments where it is mandatory to prevent moisture and contaminants from being trapped in front of the scraper element e.g. when the rod is pointing upwards, typically for bigger rod diameters in applications like:

- Mining equipment
- Hydraulic presses
- Steelworks
- Heavy construction machinery
- Marine constructions
- Offshore installations
- Water works

ADVANTAGES

- No dirt trapping because of spring activated conical scraping lip.
- Outstanding sliding properties
- Stick-slip-free, no sticking (for Turcon® materials)
- Good scraping effect even against firmly adhered dirt, etc.
- Good sealing effect from the inside against the residual fluid film adhering to the surface of the piston rod
- Clamped installation prevents particles and moisture to pass between Excluder® and cylinder head.
- Very high resistance to hydraulic media
- Available for diameters from 40 up to 2600 mm (Turcon®), up to 2200 mm (Zurcon® Z51/Z52), up to 1000 mm (Zurcon® Z82)

OPERATING CONDITIONS

Movement:	Linear respectively low speed rotary service
Back-Pressure:	Up to 1.5 MPa drain line between rod seals and Excluder® is recommended
Speed linear:	5 m/s for Turcon® materials 2 m/s for Zurcon® Z80/Z82 materials 1 m/s for Zurcon® Z51/Z52 materials
Temperature:	-45 °C to +200 °C (Turcon®) -45 °C to +110 °C (Zurcon® Z51 / Z52) -60 °C to +80 °C (Zurcon® Z80/Z82) depending on O-Ring material
Media:	Mineral oil-based hydraulic fluids, flame retardant hydraulic fluids, environmentally friendly hydraulic fluids (bio-oils), phosphate ester, water, air and others, depending on scraper ring and O-Ring material compatibility.

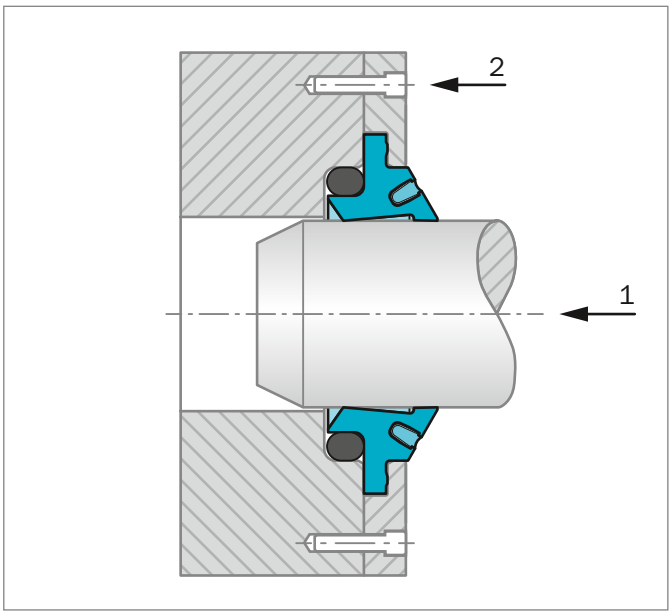

Figure 169: Installation and calibration of the Turcon® Excluder® S by the rod or a calibration mandrel

IMPORTANT NOTE

The above data are maximum values and cannot be used at the same time, e.g. the maximum operating speed depends on material type, pressure, temperature and gap value. Temperature range also depends on media.

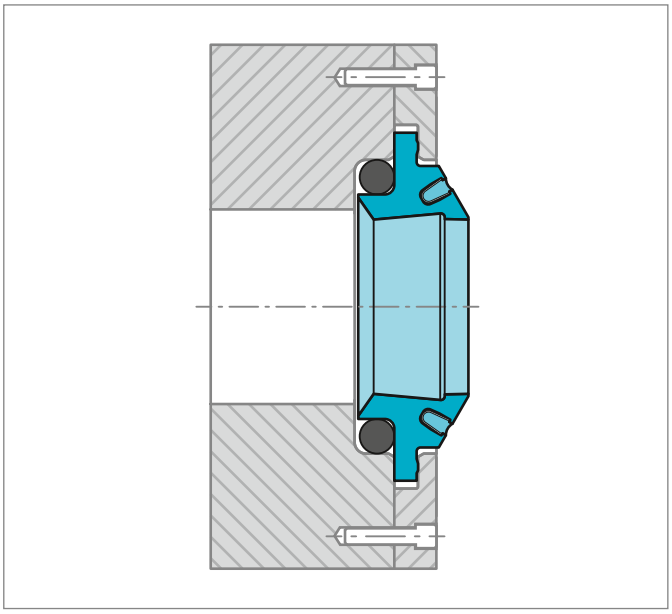

Figure 170: Turcon® Excluder® S installed in split groove

INSTALLATION INSTRUCTIONS

Excluder® S is always installed in split housing grooves.

Housing dimensions, radial clearances and recommended Excluder® S series in relation to diameter are as illustrated in Table 161.

Installation should be performed in the following steps in order to ensure a concentric and stress-free fit:

- Insert the O-Ring in the groove.
- Place the Excluder® Ring into the open groove.
- Fit the cover loosely onto the housing.
- Insert the rod - check whether rod has the recommended lead-in chamfer; if not, use a calibration mandrel - see Figure 169 **point 1**.
- Tighten the cover - see Figure 169 **point 2**.

RECOMMENDED MATERIALS

The following material combination has proven effective for most applications:

Excluder® S in Turcon® M12
All round material for hydraulic applications with reciprocating, short stroke or helical movements in mineral oils, phosphate ester, bio-oils or fluids having less satisfactory lubricating properties:

O-Ring:	NBR 70 Shore A	N
	FKM 70 Shore A	V
	EPDM 70 Shore A	E
	(depending on medium and temperature)	
Set code:	M12N, M12V or M12E	

Excluder® S in Turcon® T46
For medium to heavy duty applications with reciprocating movements in mineral oils and other media with good lubrication:

O-Ring:	NBR 70 Shore A	N
	FKM 70 Shore A	V
	(depending on medium and temperature)	
Set code:	T46N or T46V	

Excluder® S in Zurcon® Z80/Z82
For lubricating and non-lubricating fluids including water, air and gases:

O-Ring:	NBR 70 Shore A	N
	EPDM 70 Shore A	E
	(depending on medium and temperature)	
Set code:	Z80N or Z80E	

Other available material combinations are listed in Table 160.

For specific applications, all Turcon® materials are available.

Table 160: Turcon® and Zurcon® Materials for Excluder® S

Material, Applications, Properties	Code	O–Ring Material Shore A	Code	O-Ring Operating Temp.* °C	Mating Surface Material	Speed max. m/s
Turcon® M12 First material choice for linear motion Overall improved properties For new constructions and updating For all commonly applied hydraulic fluids including fluids with low lubrication performance Lowest friction and best sliding properties Lowest wear on Excluder® Improved absorption of abrasive contaminants Low wear or abrasion of counter surface BAM tested Mineral fiber and Additives filled Color: Dark gray	M12	NBR 70	N	-30 to +100	Steel Steel, hardened Steel, chrome-plated (rod) Cast iron Stainless steel Titanium	5
		NBR 70 Low temp.	T	-45 to +80		
		FKM 70	V	-10 to +200		
Turcon® T40 For lubricating and non-lubricating fluids Linear and rotary motion High frequency and short strokes Water hydraulics Surface texture not suitable for gas sealing Carbon fiber filled Color: Gray	T40	NBR 70	N	-30 to +100	Steel Steel, chrome-plated (rod) Cast iron Stainless steel Aluminum Bronze Alloys	5
		NBR 70 Low temp.	T	-45 to +80		
		FKM 70	V	-10 to +200		
		EPDM 70	E**	-45 to +145		
Turcon® T46 For lubricated hydraulics in linear motion High compressive strength High extrusion resistance Very good sliding and wear properties BAM tested Bronze filled Color: Light to dark brown, which may have variations in shading.	T46	NBR 70	N	-30 to +100	Steel (tubes) Steel, hardened Steel, chrome-plated (rod) Cast iron	5
		NBR 70 Low temp.	T	-45 to +80		
		FKM 70	V	-10 to +200		
Zurcon® Z51*** For mineral oil based fluids Linear and slowly turning movement Very high abrasion and extrusion resistance For counter surface with rougher surface finish More difficult to install Limited chemical resistance Max. working temperature +110 °C Cast polyurethane Color: Yellow to light-brown	Z51	NBR 70	N	-30 to +100	Steel Steel, hardened Cast iron Ceramic coating Stainless steel	1
		NBR 70 Low temp.	T	-45 to +80		

Table continues on next page

Material, Applications, Properties	Code	O–Ring Material Shore A	Code	O-Ring Operating Temp.* °C	Mating Surface Material	Speed max. m/s
Zurcon® Z52* ** For mineral oil based fluids Linear and slowly turning movements High abrasion resistance For counter surface with rougher surface finish Good extrusion resistance Limited chemical resistance Max. working temperature +110 °C Cast polyurethane Color: Turquoise	Z52	NBR 70	N	-30 to +100	Steel Steel, hardened Steel, chrome-plated (rod) Cast iron Stainless steel Aluminum Bronze Alloys Ceramic coating	1
		NBR 70 Low temp.	T	-45 to +80		
Zurcon® Z80 For lubricating and non-lubricating fluids Water based fluids, air and gases Dry air pneumatics Linear and slowly turning movements High abrasion and extrusion resistance For service in abrasive conditions and media with particles Good chemical resistance Limited temperature capability (-60 to +80 °C) Not resistant to UV-light (sunlight), use Z82 instead UHMWPE (Ultra High Molecular Weight Polyethylene) Color: White to off white	Z80	NBR 70	N	-30 to (+100)	Steel Steel, chrome-plated (rod) Stainless steel Aluminum Bronze Ceramic coating	2
		NBR 70 Low temp.	T	-45 to +80		
		EPDM 70	E**	-45 to (+145)		
Zurcon® Z82 Same as Z80 but resistant to UV-light (sunlight) UHMWPE (Ultra High Molecular Weight Polyethylene) Color: Black	Z82	NBR 70	N	-30 to (+100)	Steel Steel, chrome-plated (rod) Stainless steel Aluminum Bronze Ceramic coating	2
		NBR 70 Low temp.	T	-45 to +80		
		EPDM 70	E**	-45 to (+145)		

* The O-Ring Operation Temperature is only valid in mineral hydraulic oil, except EPDM.

** Material not suitable for mineral oils.

*** Max. diameter 2200 mm

BAM: Tested by “Bundesanstalt Materialprüfung, Germany”.

Highlighted materials are recommended.

Installation Recommendation

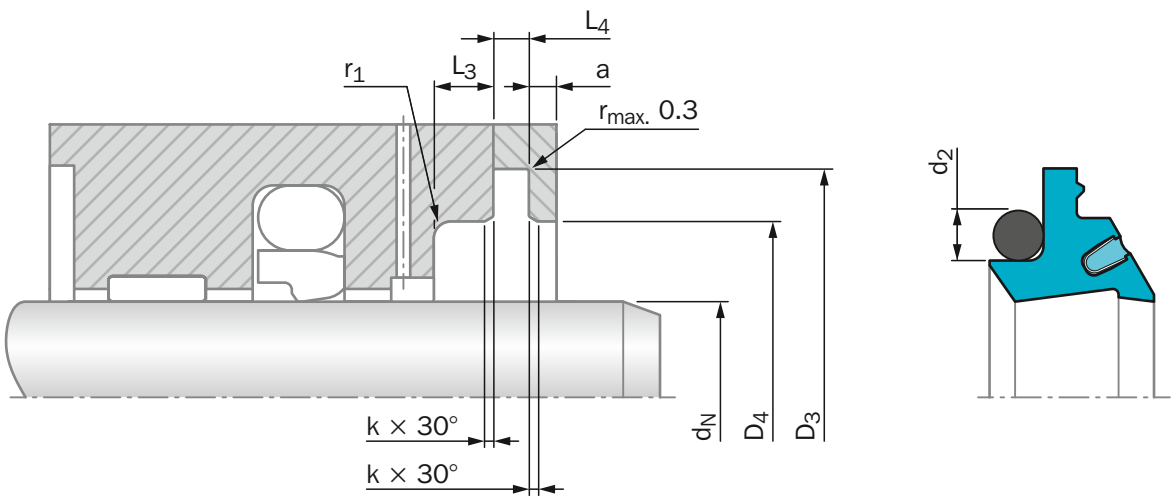

Figure 171: Installation Drawing

Table 161: Installation Dimensions

Series No.	Rod Diameter d_N f8/h9		Groove Diameter	Groove Width	Groove Width	Groove Diameter	Radius	Step Width	Inlet Cham-fer	O-Ring Cross-Section
	Standard Application	Available Range	D_3 H10	L_4 ±0.08	L_3 +0.2/-0.0	D_4 H9	r_1 max	a +0.0/-0.1	k	d_2
WES0	16 – 49.9	16 – 90	d_N + 12.0	1.80	2.20	d_N + 7.3	0.5	1.2	0.5	1.78
WES2	50 – 349.9	40 - 800	d_N + 18.7	2.50	4.20	d_N + 11.3	1.2	2.0	0.7	3.53
WES3	350 - 799.9	100 - 999.9	d_N + 28.0	4.00	6.30	d_N + 17.0	1.8	3.0	1.0	5.33
WES4	800 - 999.9	250 - 999.9	d_N + 33.0	4.50	8.25	d_N + 21.0	2.2	4.5	1.2	7.00
WES4X	1000 – 2600		d_N + 33.0	4.50	8.25	d_N + 21.0	2.2	4.5	1.2	7.00

WES1 Series are not available

ORDERING EXAMPLE

Excluder® S with V-Spring complete with O-Ring, standard application:

Series:	WES3 from Table 161
Rod Diameter:	d_N = 350.0 mm
TSS Part No.:	WES303500 from Table 162

Select the material from Table 160. The corresponding code numbers are appended to the TSS Part No. Together these form the TSS Article Number. The TSS Article No. for all intermediate sizes can be determined by following the example:

TSS Article No. **WES3 0 3500 - M12 N**

- TSS Series No. — WES3
- Type (Standard) — 0
- Rod Diameter x 10* — 3500
- Quality Index (Standard) — -
- Material Code (Seal Ring) — M12
- Material Code (O-Ring) — N

* For diameters $d_N \geq 1000.0$ mm multiply only by factor 1.
Example: WES4 for diameter d_N = 1200.0 mm
TSS Article No.: WES4**X1200**-M12N

Table 162: Installation Dimensions / TSS Part Numbers

Rod Dia. d_N f8/h9	Groove Dia. D_3 H9	Groove Width L_3 +0.2	TSS Part No.	O-Ring Size
16.0	**28.0**	**2.20**	**WES000160**	**19.00 x 1.80**
18.0	**30.0**	**2.20**	**WES000180**	**21.95 x 1.78**
20.0	**32.0**	**2.20**	**WES000200**	**23.52 x 1.78**
22.0	**34.0**	**2.20**	**WES000220**	**25.12 x 1.78**
25.0	**37.0**	**2.20**	**WES000250**	**28.30 x 1.78**
28.0	**40.0**	**2.20**	**WES000280**	**31.47 x 1.78**
30.0	42.0	2.20	WES000300	33.05 x 1.78
32.0	**44.0**	**2.20**	**WES000320**	**34.65 x 1.78**
36.0	**48.0**	**2.20**	**WES000360**	**37.82 x 1.78**
40.0	**52.0**	**2.20**	**WES000400**	**44.17 x 1.78**
45.0	**57.0**	**2.20**	**WES000450**	**47.35 x 1.78**
50.0	**68.7**	**4.20**	**WES200500**	**53.57 x 3.53**
56.0	**74.7**	**4.20**	**WES200560**	**59.92 x 3.53**
63.0	**81.7**	**4.20**	**WES200630**	**66.27 x 3.53**
70.0	**88.7**	**4.20**	**WES200700**	**72.62 x 3.53**
80.0	**98.7**	**4.20**	**WES200800**	**82.14 x 3.53**
90.0	**108.7**	**4.20**	**WES200900**	**94.84 x 3.53**
100.0	**118.7**	**4.20**	**WES201000**	**104.37 x 3.53**
110.0	**128.7**	**4.20**	**WES201100**	**113.89 x 3.53**
120.0	138.7	4.20	WES201200	123.42 x 3.53
125.0	**143.7**	**4.20**	**WES201250**	**129.77 x 3.53**
130.0	148.7	4.20	WES201300	132.94 x 3.53
140.0	**158.7**	**4.20**	**WES201400**	**142.47 x 3.53**
150.0	168.7	4.20	WES201500	151.99 x 3.53
160.0	**178.7**	**4.20**	**WES201600**	**164.69 x 3.53**
170.0	188.7	4.20	WES201700	171.04 x 3.53
180.0	**198.7**	**4.20**	**WES201800**	**183.74 x 3.53**
190.0	208.7	4.20	WES201900	190.09 x 3.53
200.0	**218.7**	**4.20**	**WES202000**	**202.79 x 3.53**
210.0	228.7	4.20	WES202100	209.14 x 3.53
220.0	**238.7**	**4.20**	**WES202200**	**221.84 x 3.53**
230.0	248.7	4.20	WES202300	234.54 x 3.53
240.0	258.7	4.20	WES202400	240.89 x 3.53
250.0	**268.7**	**4.20**	**WES202500**	**253.59 x 3.53**
280.0	**298.7**	**4.20**	**WES202800**	**278.99 x 3.53**
300.0	318.7	4.20	WES203000	304.39 x 3.53
320.0	**338.7**	**4.20**	**WES203200**	**304.39 x 3.53**
350.0	378.0	6.30	WES303500	354.97 x 5.33
360.0	**388.0**	**6.30**	**WES303600**	**365.00 x 5.30**
380.0	408.0	6.30	WES303800	380.37 x 5.33
400.0	428.0	6.30	WES304000	405.26 x 5.33
420.0	448.0	6.30	WES304200	405.26 x 5.33
440.0	468.0	6.30	WES304400	430.66 x 5.33
450.0	478.0	6.30	WES304500	456.06 x 5.33
480.0	508.0	6.30	WES304800	481.38 x 5.33
500.0	528.0	6.30	WES305000	506.78 x 5.33
550.0	578.0	6.30	WES305600	532.18 x 5.33
600.0	628.0	6.30	WES306000	582.68 x 5.33
650.0	678.0	6.30	WES306500	633.48 x 5.33
680.0	708.0	6.30	WES306800	658.88 x 5.33
700.0	728.0	6.30	WES307000	658.88 x 5.33
750.0	778.0	6.30	WES307500	658.88 x 5.33
800.0	833.0	8.25	WES408000	809 x 7.00
850.0	883.0	8.25	WES408500	859 x 7.00
900.0	933.0	8.25	WES409000	909 x 7.00
950.0	983.0	8.25	WES409500	959 x 7.00
1000.0	1033.0	8.25	WES4X1000	1009 x 7.00
1200.0	1233.0	8.25	WES4X1200	1209 x 7.00
1500.0	1533.0	8.25	WES4X1500	1509 x 7.00
1800.0	1833.0	8.25	WES4X1800	1809 x 7.00
2000.0	2033.0	8.25	WES4X2000	2009 x 7.00
2200.0	2233.0	8.25	WES4X2200	2209 x 7.00
2600.0	2633.0	8.25	WES4X2600	2609 x 7.00

The rod diameters in **bold** type comply with the recommendations of ISO 3320

Optional Designs

Turcon® Excluder® SN
Optional, Turcon® Excluder® SN - Figure 172 the internal sealing lip has axial notch for applications where pressure trapping behind Excluder® S exceeds the allowed 1.5 MPa and a drain line not applicable.

The axial notch will lead the pressure to the scraping lip, which is lifted and relieving the pressure. This version is only delivered on TSS Standard Part Number with V-Spring Excluder® lip activation.

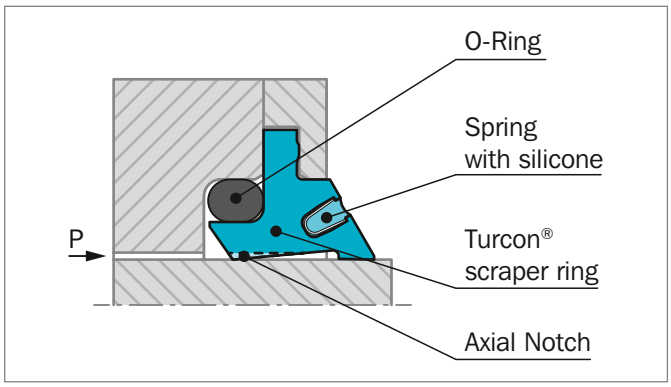

Figure 172: Optional Turcon® Excluder® SN where internal sealing lip has axial notch.

ORDERING EXAMPLE

Optional Excluder® SN with V-Spring and Notch on internal sealing lip, complete with O-Ring, standard application:

Series:	WES3N from Table 161
Rod Diameter:	d_N = 350.0 mm
TSS Part No.:	WES3N3500 from Table 162

Select the material from Table 160. The corresponding code numbers are appended to the TSS Part No. Together these form the TSS Article Number. The TSS Article No. for all intermediate sizes can be determined by following the example:

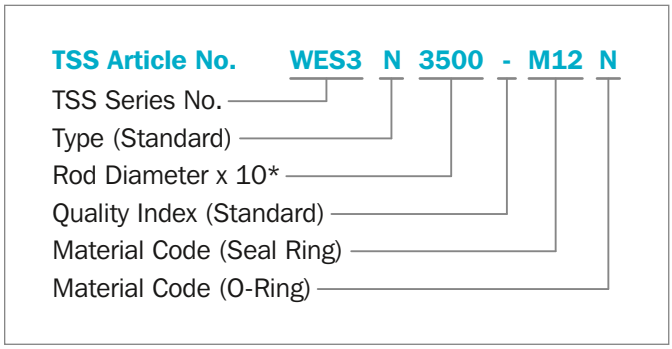

* For diameters $d_N \geq 1000$ mm WES_N is available on TSS Special Part No.

Turcon® Excluder® SR
Optional Turcon® Excluder® SR - Figure 173 - with 2 O-Rings as elastic energizing elements.
The V-Spring is exchanged with an O-Ring for applications with less demanding service and situations where conditions or regulations eliminate applying metal V-Spring with silicone.

When Installing Excluder® SR with O-Ring scraper lip activation the O-Ring is mounted into the lip before the Excluder® Ring is placed in the groove.

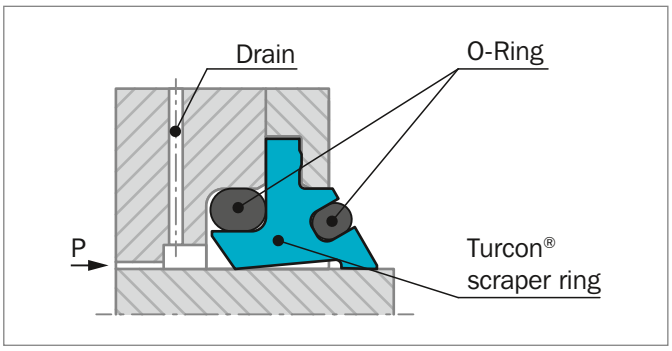

Figure 173: Optional Turcon® Excluder® SR with O-Ring activated Excluder® lip

ORDERING EXAMPLE

Turcon® Excluder® SR complete with O-Rings, standard application:

Series:	WES3R from Table 161
Rod Diameter:	d_N = 350.0 mm
TSS Part No.:	WES3R3500 from Table 162

Select the material from Table 160. The corresponding code numbers are appended to the TSS Part No. Together these form the TSS Article Number. The TSS Article No. for all intermediate sizes can be determined by following the example:

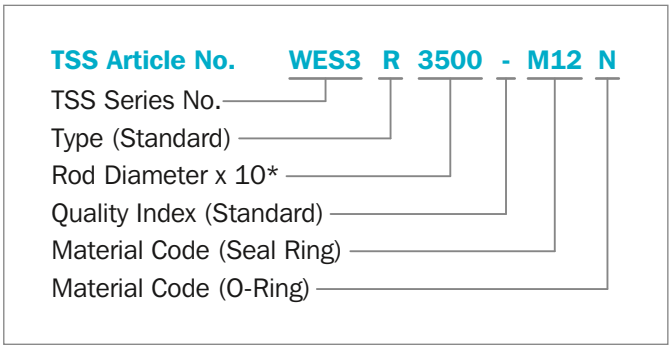

* For diameters $d_N \geq 1000$ mm WES_R is available on TSS Special Part No.

Turcon® Excluder® 1 and Excluder® 113

Double-acting

Rubber-energized Double-acting Scraper

Material:
Turcon®, Zurcon® and Elastomer

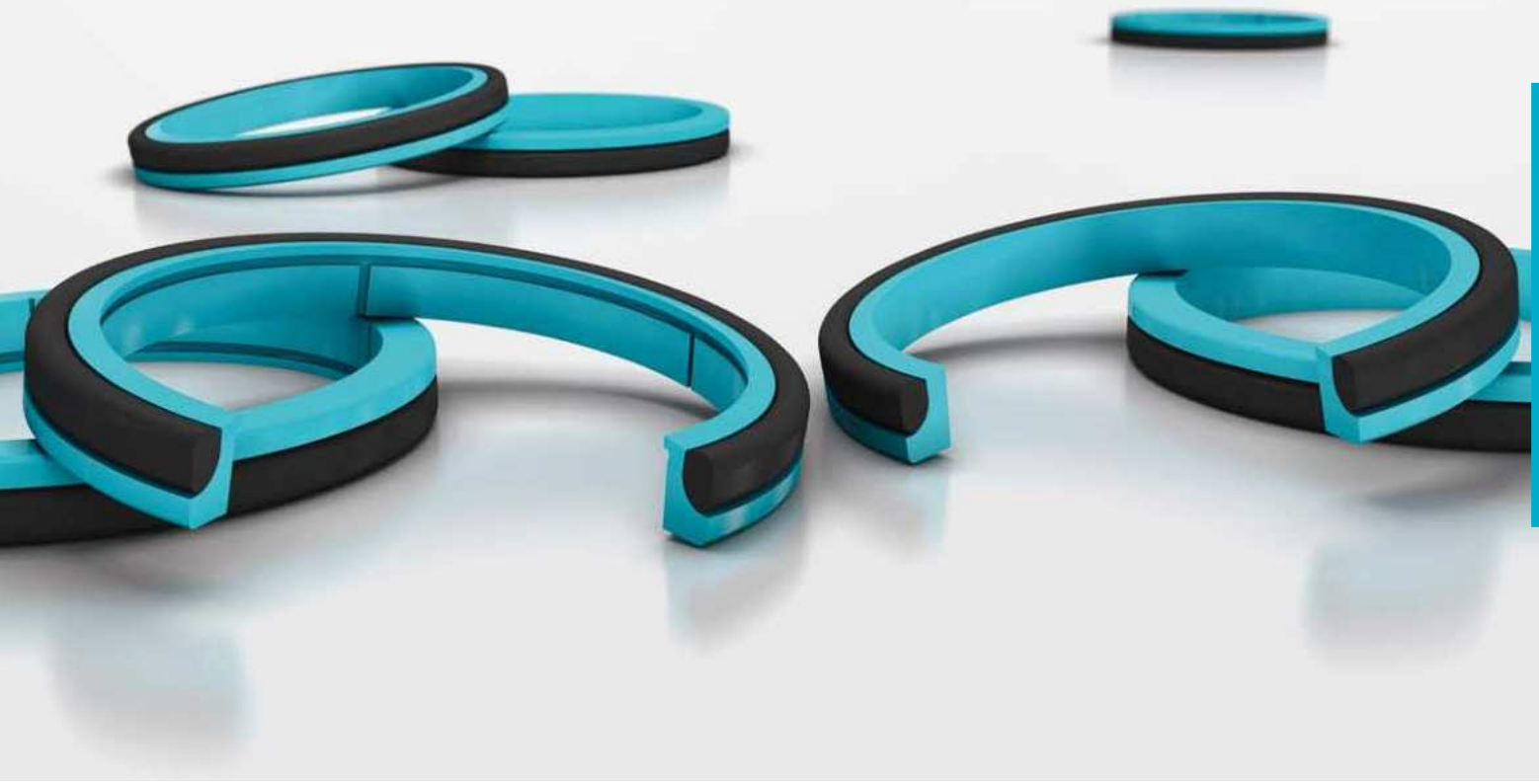

Turcon® Excluder® 1

Description

Turcon® Excluder® 1 is the classic single acting scraper both for rough, delicate, hot or cold environments. It consists of two components a scraper ring and a flexible elastomer O-Ring which ensures a tight contact with surface to be scraped. The O-Ring also functions as static seal between the opposite side of the scraper ring and the groove bottom.

APPLICATIONS

Excluder® 1 can be installed in a variety of rod sealing systems with linear movements.

A single acting scraper requires a very tight sealing system for minimising the fluid film, which will pass the scraper as leakage, and to prevent pressure activation, which can disturb the scraping function.

Produced in hard Turcon® or Zurcon® materials, the robust Excluder® 1 is able to scrape off difficult and persistent impurities such as dust, dirt, solid particles, ice, etc.

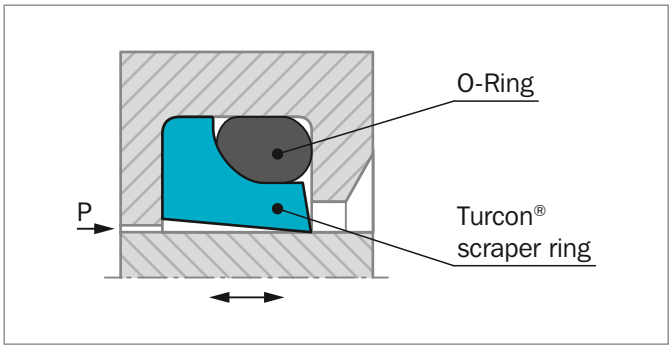

Figure 174: Turcon® Excluder® 1 an all-round single acting scraper

ADVANTAGES

- Simple compact groove requirement, same as Turcon® Excluder® 2
- Excellent scraping performance
- Excellent wear resistant
- Compact robust design
- Compensates for deflection of the piston rod
- Low friction
- No stick-slip effect
- No vulcanising to counter surface
- High and low temperature capability
- Very high resistance to hydraulic media
- Available in all sizes from 6 mm to 999 mm. Sizes above 1000 mm are available on TSS Special Part Number
- ISO 6195 Type D housing dimension up to diameter 63 mm.

OPERATING CONDITIONS

Speed linear:	Max. 15 m/s Turcon® materials Max. 5 m/s Zurcon® Z80 materials Max. 1 m/s Zurcon® Z51/Z52 materials
Temperature:	-45 °C to + 200 °C (Turcon®) -45 °C to + 80 °C (Zurcon® Z80) -45 °C to + 110 °C (Zurcon® Z51/Z52) depending on O-Ring material
Media:	Mineral oil-based hydraulic fluids, flame retardant hydraulic fluids, environmentally friendly hydraulic fluids (bio-oils), phosphate ester, water, air and others, depending on scraper ring and O-Ring material compatibility.

IMPORTANT NOTE

The above data are maximum values and cannot be used at the same time, e.g. the maximum operating speed depends on material type, environment, temperature and media.

INSTALLATION INSTRUCTIONS

Excluder® 1 scraper can be installed in split and closed grooves. Installation in closed grooves is dependent on the rod diameter, profile cross-section of the scraper and on the cord cross-section of the corresponding O-Ring, see Table 163.

Table 163: Installation in Closed Grooves

Turcon® Excluder® 1 Series No.	Rod Diameter d_N mm	O-Ring Cross-Section d_2 mm
WEM3, WEL5	> 30	1.78
WEM3, WEL5, WEH1	> 30	2.62
WEM3, WEL5, WEH1	> 30	3.53
WEM3, WEL5, WEH1	> 40	5.33
WEM3, WEL5, WEH1	> 110	7.00
WEM3, WEH1	> 140	8.40

1) The O-Ring is installed in the groove.
2) The Excluder® ring is compressed into a kidney-shape and placed in the groove, see Figure 175.

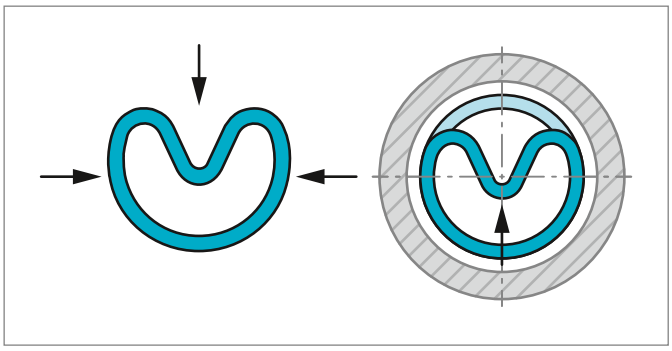

Figure 175: Place the Excluder® in compressed form into the groove behind the O-Ring and push Excluder® ring in the direction of the arrow

RECOMMENDED MATERIALS

The following material combinations have proven effective for hydraulic applications:

Turcon® Excluder® 1 in Turcon® M12
All round material for light to medium hydraulic applications linear, short stroke or helical movements in mineral oils, flame retardant hydraulic fluids, phosphate ester, bio-oils or fluids having low lubricating properties:

O-Ring:	NBR 70 Shore A	N
	FKM 70 Shore A	V

Set code: M12N or M12V

Turcon® Excluder® 1 in Turcon® T46
For medium to heavy applications with linear movements in mineral oils and other media with good lubrication:

O-Ring:	NBR 70 Shore A	N
	FKM 70 Shore A	V

Set code: T46N or T46V

For specific applications, all Turcon® materials are available. Other material combinations are listed in Table 164.

Table 164: Turcon® and Zurcon® Materials for Excluder® 1 and 113

Material, Applications, Properties	Code	O–Ring Material Shore A	Code	O-Ring Operating Temp.* °C	Mating Surface Material	Speed max. m/s
Turcon® M12 First material choice for linear motion Overall improved properties For new constructions and updating For all commonly applied hydraulic fluids including fluids with low lubrication performance Lowest friction and best sliding properties Lowest wear on seals Improved absorption of abrasive contaminants Low wear or abrasion of counter surface BAM tested Mineral fiber and Additives filled Color: Dark gray	M12	NBR 70	N	-30 to +100	Steel Steel, hardened Steel, chrome plated (rod) Steel plated (rod) Cast iron Stainless steel Titanium	15
		NBR 70 Low temp.	T	-45 to +80		
		FKM 70	V	-10 to +200		
Turcon® T40 For lubricating and non-lubricating fluids High frequency and short strokes Water hydraulics Surface texture is not suitable for gas sealing Carbon fiber filled Color: Gray.	T40	NBR 70	N	-30 to +100	Steel Steel, chrome plated (rod) Cast iron Stainless steel Aluminum	15
		NBR 70 Low temp.	T	-45 to +80		
		FKM 70	V	-10 to +200		
		EPDM 70	E**	-45 to +145		
Turcon® T46 For lubricated hydraulics in linear motion High compressive strength High extrusion resistance Very good sliding and wear properties BAM tested Bronze filled Color: Light to dark brown, which may have variations in shading.	T46	NBR 70	N	-30 to +100	Steel, hardened Steel, chrome plated (rod) Cast iron	15
		NBR 70 Low temp.	T	-45 to +80		
		FKM 70	V	-10 to +200		
Zurcon® Z51*** For mineral oil based fluids Very high abrasion and extrusion resistance For counter surface with rougher surface finish More difficult to install Limited chemical resistance Max. working temperature +110 °C Cast polyurethane Color: Yellow to light-brown	Z51	NBR 70	N	-30 to +100	Steel Steel, hardened Cast iron Ceramic coating Stainless steel	1
		NBR 70 Low temp.	T	-45 to +80		

Table continues on next page

Material, Applications, Properties	Code	O–Ring Material Shore A	Code	O-Ring Operating Temp.* °C	Mating Surface Material	Speed max. m/s
Zurcon® Z52* **** For mineral oil based fluids High abrasion resistance For counter surface with rougher surface finish Good extrusion resistance Limited chemical resistance Max. working temperature +110 °C Cast polyurethane Color: Turquoise	Z52	NBR 70	N	-30 to +100	Steel Steel, hardened Steel, chrome plated (rod) Cast iron Stainless steel Aluminum	1
		NBR 70 Low temp.	T	-45 to +80		
Zurcon® Z80 For lubricating and non-lubricating fluids Water based fluids, air and gases Dry air pneumatics High abrasion and extrusion resistance For service in abrasive conditions and media with particles Good chemical resistance Limited temperature capability (-60 to +80 °C) UHMWPE (Ultra High Molecular Weight Polyethylene)	Z80	NBR 70	N	-30 to (+100)	Steel Steel, chrome plated (rod) Stainless steel Aluminum Ceramic coating	5
		NBR 70 Low temp.	T	-45 to +80		
		EPDM 70	E**	-45 to (+145)		

* The O-Ring Operation Temperature is only valid in mineral hydraulic oil, except EPDM.

** Material not suitable for mineral oils.

*** Max. diameter 2200 mm

BAM: Tested by “Bundesanstalt Materialprüfung, Germany”.

Highlighted materials are recommended.

Installation Recommendation

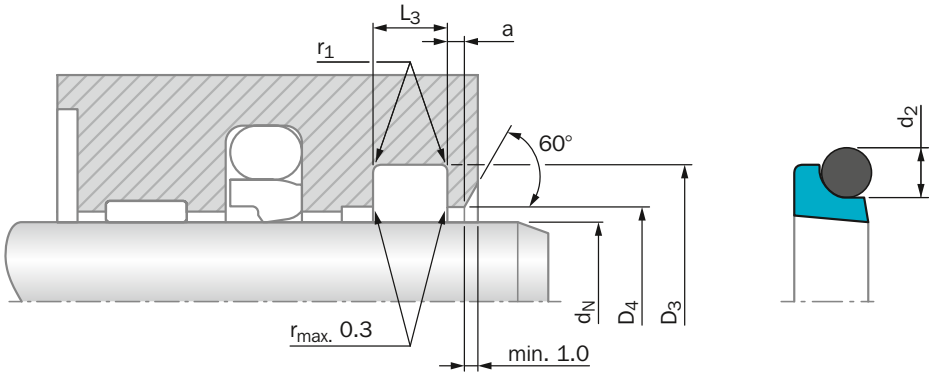

Figure 176: Installation Drawing

Table 165: Installation Dimensions – Standard Recommendations

Rod Diameter d_N f8/h9			Groove Diameter	Groove Width	Bore Diameter	Step Width	Radius	O-Ring Cross-Section
Serie No. WEM3 Standard Application	Serie No. WEL5 Light Application	Serie No. WEH1 Heavy Duty Application	D_3 H9	L_3 +0.2	D_4 H11	a_{min}	$r_{1\ max}$	d_2
6 - 11.9	12 - 64.9	-	d_N + 4.8	3.7	d_N + 1.5	2.0	0.4	1.78
12 - 64.9	65 - 250.9	6 - 11.9	d_N + 6.8	5.0	d_N + 1.5	2.0	0.7	2.62
65 - 250.9	251 - 420.9	12 - 64.9	d_N + 8.8	6.0	d_N + 1.5	3.0	1.0	3.53
251 - 420.9	421 - 650.9	65 - 250.9	d_N + 12.2	8.4	d_N + 2.0	4.0	1.2	5.33
421 - 650.9	651 - 999.9	251 - 420.9	d_N + 16.0	11.0	d_N + 2.0	4.0	1.5	7.00
651 - 999.9		421 - 650.9	d_N + 20.0	14.0	d_N + 2.5	5.0	2.0	8.40

Sizes from d_N 1000.0 mm to d_N 2600.0 mm are available on TSS special part number

ORDERING EXAMPLE

Turcon® Excluder® 1 complete with O-Ring, standard application:

Series:	WEM3 from Table 165
Rod Diameter:	d_N = 50.0 mm
TSS Part No.:	WEM300500 from Table 166

Select the material from Table 164. The corresponding code numbers are appended to the TSS Part No. Together these form the TSS Article Number.The TSS Article No. for all intermediate sizes can be determined by following the example:

TSS Article No. WEM3 0 0500 - M12 N

- TSS Series No. — WEM3
- Type (Standard) — 0
- Rod Diameter x 10 — 0500
- Quality Index (Standard) — -
- Material Code (Seal Ring) — M12
- Material Code (O-Ring) — N

Table 166: Installation Dimensions / TSS Part Numbers

Rod Dia. d_N f8/h9	Groove Dia. D_3 H9	Groove Width L_3 +0.2	TSS Part No.	O-Ring Size
6.0*	10.8	3.7	WEM300060	7.65 x 1.78
8.0*	12.8	3.7	WEM300080	9.50 x 1.80
10.0*	14.8	3.7	WEM300100	11.80 x 1.80
12.0*	18.8	5.0	WEM300120	13.94 x 2.62
14.0*	20.8	5.0	WEM300140	15.54 x 2.62
16.0*	22.8	5.0	WEM300160	18.00 x 2.65
18.0*	24.8	5.0	WEM300180	20.29 x 2.62
19.0	25.8	5.0	WEM300190	20.29 x 2.62
20.0*	26.8	5.0	WEM300200	21.89 x 2.62
22.0*	28.8	5.0	WEM300220	23.47 x 2.62
25.0*	31.8	5.0	WEM300250	26.64 x 2.62
28.0*	34.8	5.0	WEM300280	29.82 x 2.62
30.0	36.8	5.0	WEM300300	31.42 x 2.62
32.0*	38.8	5.0	WEM300320	34.59 x 2.62
33.0	39.8	5.0	WEM300330	34.59 x 2.62
34.0	40.8	5.0	WEM300340	36.17 x 2.62
35.0	41.8	5.0	WEM300350	36.17 x 2.62
36.0*	42.8	5.0	WEM300360	37.77 x 2.62
40.0*	46.8	5.0	WEM300400	42.52 x 2.62
45.0*	51.8	5.0	WEM300450	47.29 x 2.62
48.0	54.8	5.0	WEM300480	50.47 x 2.62
50.0*	56.8	5.0	WEM300500	52.07 x 2.62
56.0*	62.8	5.0	WEM300560	58.42 x 2.62
60.0	66.8	5.0	WEM300600	61.60 x 2.62
63.0*	69.8	5.0	WEM300630	64.77 x 2.62
65.0	73.8	6.0	WEM300650	66.27 x 3.53
70.0	78.8	6.0	WEM300700	72.62 x 3.53
75.0	83.8	6.0	WEM300750	75.79 x 3.53
80.0	88.8	6.0	WEM300800	82.14 x 3.53
85.0	93.8	6.0	WEM300850	85.32 x 3.53
90.0	98.8	6.0	WEM300900	91.67 x 3.53
100.0	108.8	6.0	WEM301000	101.19 x 3.53
110.0	118.8	6.0	WEM301100	110.72 x 3.53
120.0	128.8	6.0	WEM301200	120.24 x 3.53
130.0	138.8	6.0	WEM301300	132.94 x 3.53
140.0	148.8	6.0	WEM301400	142.47 x 3.53
150.0	158.8	6.0	WEM301500	151.99 x 3.53
160.0	168.8	6.0	WEM301600	158.34 x 3.53
180.0	188.8	6.0	WEM301800	177.39 x 3.53
200.0	208.8	6.0	WEM302000	202.79 x 3.53
225.0	233.8	6.0	WEM302250	228.19 x 3.53
250.0	258.8	6.0	WEM302500	253.59 x 3.53
275.0	287.2	8.4	WEM302750	278.77 x 5.33
300.0	312.2	8.4	WEM303000	304.17 x 5.33
320.0	332.2	8.4	WEM303200	304.17 x 5.33
380.0	392.2	8.4	WEM303800	380.37 x 5.33
400.0	412.2	8.4	WEM304000	405.26 x 5.33
450.0	466.0	11.0	WEM304500	443.36 x 7.00
480.0	496.0	11.0	WEM304800	481.38 x 7.00
500.0	516.0	11.0	WEM305000	494.16 x 7.00
550.0	566.0	11.0	WEM305500	557.66 x 7.00
600.0	616.0	11.0	WEM306000	608.08 x 7.00
640.0	656.0	11.0	WEM306400	633.48 x 7.00
680.0	700.0	14.0	WEM306800	685 x 8.40
700.0	720.0	14.0	WEM307000	705 x 8.40
750.0	770.0	14.0	WEM307500	755 x 8.40
800.0	820.0	14.0	WEM308000	805 x 8.40
850.0	870.0	14.0	WEM308500	855 x 8.40
900.0	920.0	14.0	WEM309000	905 x 8.40
950.0	970.0	14.0	WEM309500	955 x 8.40

* Installation in grooves according to ISO 6195 Type D

Turcon® Excluder® 113

Description

If Turcon® Excluder® 1 has been deformed or tilted by pressure activation, and acted as a seal, the pressure might have extruded and damaged the scraper lip.

To prevent this a one-way pressure relief version can be utilised where the pressure in all circumstances is channelled to a circumferential groove in Turcon® Excluder® 113 below the elastomers activation element. Should a high pressure appear, the scraping lip will shortly be lifted and the pressure released. Excluder® 113 is also applicable where the choice of seals would involve a risk of hydrodynamic pressure build-up between a seal and a double lip Excluder® .

Only available on TSS Standard Part No. in WEM3 series in all sizes from 6 mm to 999 mm. Sizes above 1000 mm are available on TSS Special Part Number.

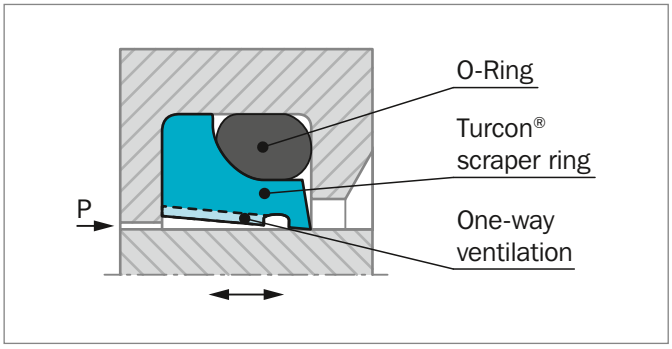

Figure 177: Turcon® Excluder® 113 with built-in one-way pressure relief

OPERATING CONDITIONS

Identical to Turcon® Excluder® 1 see page 485.

INSTALLATION INSTRUCTIONS

Excluder® 113 scrapers can be installed in split and closed grooves.

Installation in closed grooves is dependent on the rod diameter, profile cross-section of the scraper and on the cord cross-section of the corresponding O-Ring, see Table 167.

Table 167: Installation in Closed Grooves

Turcon® Excluder® 113 Series No.	Rod Diameter d_N mm	O-Ring Cross-Section-Ø d_2 mm
WEM3E	> 30	1.78
WEM3E	> 30	2.62
WEM3E	> 30	3.53
WEM3E	> 40	5.33
WEM3E	> 110	7.00
WEM3E	> 140	8.40

Installation procedure is identical to Turcon® Excluder® 1

MATERIALS

Identical to Turcon® Excluder® 1, see Table 164.

Installation Recommendation

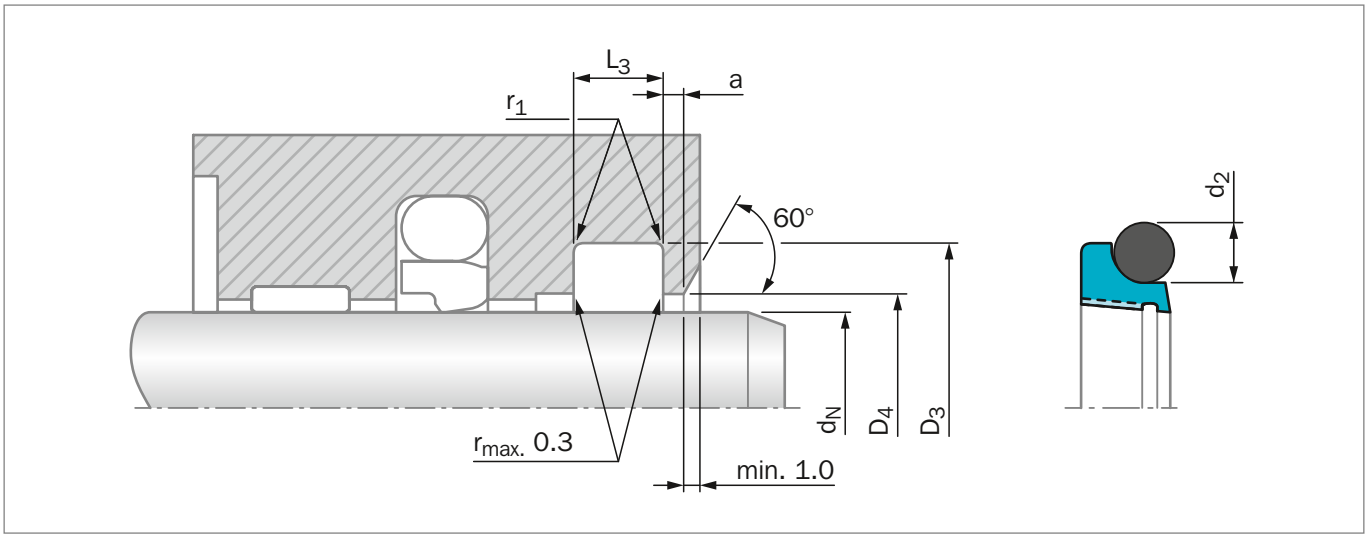

Figure 178: Installation Drawing

Table 168: Installation Dimensions

Series No.	Rod Diameter d_N f8/h9	Groove Diameter	Groove Width	Bore Diameter	Step Width	Radius	O-Ring Cross-Section
	Standard Application	D_3 H9	L_3 +0.2/-0.0	D_4 H11	a_{min}	$r_{1\ max}$	d_2
WEM3E	6 – 11.9	d_N + 4.8	3.7	d_N + 1.5	2.0	0.4	1.78
WEM3E	12 – 64.9	d_N + 6.8	5.0	d_N + 1.5	2.0	0.7	2.62
WEM3E	65 – 250.9	d_N + 8.8	6.0	d_N + 1.5	3.0	1.0	3.53
WEM3E	251 – 420.9	d_N + 12.2	8.4	d_N + 2.0	4.0	1.2	5.33
WEM3E	421 – 650.9	d_N + 16.0	11.0	d_N + 2.0	4.0	1.5	7.00
WEM3E	651 – 999.9	d_N + 20.0	14.0	d_N + 2.5	5.0	2.0	8.40

Sizes from d_N 1000.0 mm to d_N 2600.0 mm are available on special part number.

ORDERING EXAMPLE

Turcon® Excluder® 113 complete with O-Ring, standard application:

Series:	WEM3E from Table 168
Rod Diameter:	d_N = 50.0 mm
TSS Part No.:	WEM3E0500 from Table 166

Select the material from Table 164. The corresponding code numbers are appended to the TSS Part No. Together these form the TSS Article Number. The TSS Article No. for all intermediate sizes can be determined by following the example:

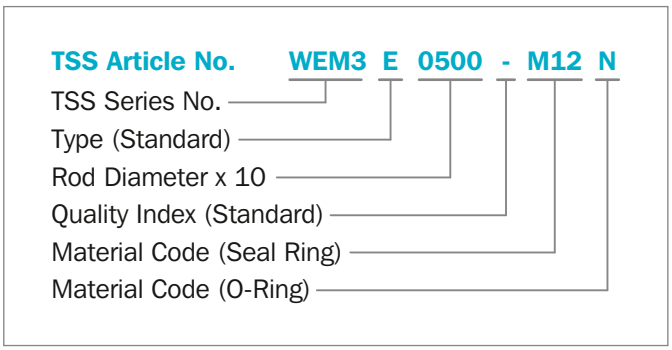

Scraper DA 17

Double-acting

Material:
Rubber

Scraper DA 17

Description

The scraper DA 17 is a molded double-acting elastomer scraper. It has two geometrically different scraper lips.

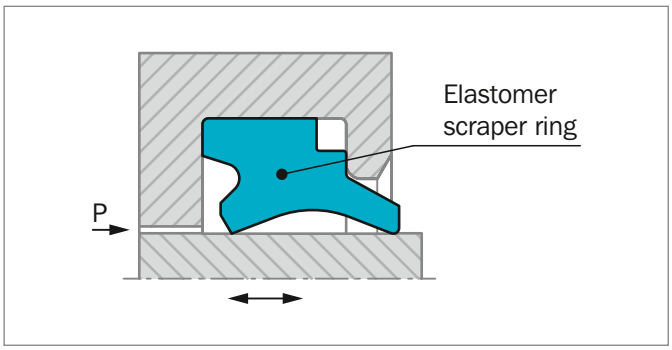

Figure 179: Scraper DA 17

The scraper is preferably used for reciprocating piston rods and plunger pistons in hydraulic cylinders. It prevents the penetration of dirt into the system and on the medium side holds back the residual oil film from the extending piston rod.

The scraper is preferably used in conjunction with our rod seal Turcon® Stepseal® , i.e. seals with a hydrodynamic back-pumping function.

ADVANTAGES

- Low friction
- Good scraping effect both inwards and outwards
- Simple, small installation groove
- Compact design
- Easy installation and removal without tools

OPERATING CONDITIONS

Speed:	Up to 1 m/s
Temperature:	-30 °C to +110 °C
Media:	Mineral oil-based hydraulic fluids, flame retardant hydraulic fluids (HFA, HFB, HFC), water, air, etc.

IMPORTANT NOTE

The above data are maximum values and cannot be used at the same time, e.g. the maximum operating speed depends on material type, pressure, temperature and gap value. Temperature range also depends on media.

MATERIAL

Standard material: NBR 90 Shore A

Installation Recommendation

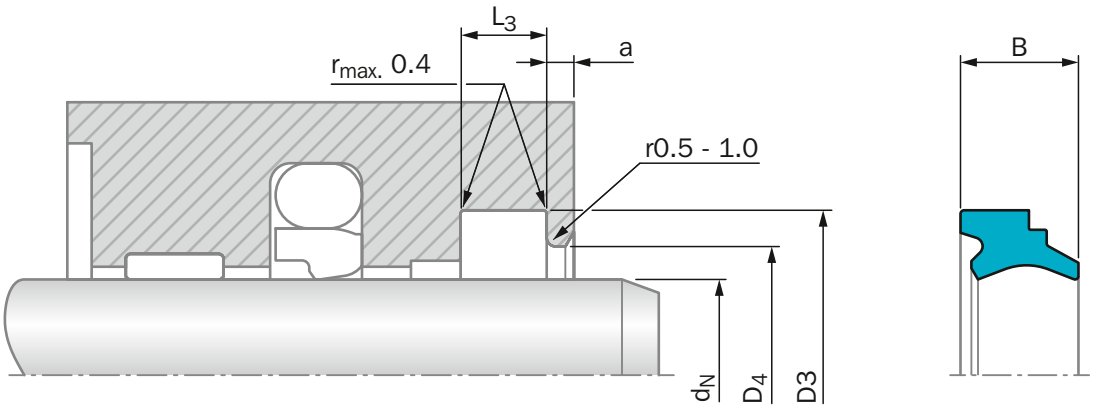

Figure 180: Installation Drawing

ORDERING EXAMPLE

Scraper DA 17

Rod Diameter:	d_N = 50.0 mm
TSS Part No.:	WD1700500 from Table 169
Material:	Standard material NBR 90 Shore A, Code N9

TSS Article No. **WD17 0 0500 - N9**

- TSS Series No.
- Type (Standard)
- Rod Diameter x 10
- Quality Index
- Material Code

Table 169: Installation Dimensions / TSS Part Numbers

Rod Diameter	Groove Diameter	Groove Width	Bore Diameter	Step Width	Width	TSS Part No.
d_N f8/h9	D3 H9	L_3 +0.2	D_4 H11	a_{min}	B	
10.0	**18.0**	**6.0**	**13.5**	**2.0**	**8.0**	**WD1700100**
12.0	**20.0**	**6.0**	**15.5**	**2.0**	**8.0**	**WD1700120**
14.0	**22.0**	**6.0**	**17.5**	**2.0**	**8.0**	**WD1700140**
15.0	23.0	6.0	18.5	2.0	8.0	WD1700150
16.0	**24.0**	**6.0**	**19.5**	**2.0**	**8.0**	**WD1700160**
18.0	**26.0**	**6.0**	**21.5**	**2.0**	**8.0**	**WD1700180**
20.0	**28.0**	**6.0**	**23.5**	**2.0**	**8.0**	**WD1700200**
22.0	**30.0**	**6.0**	**25.5**	**2.0**	**8.0**	**WD1700220**
24.0	32.0	6.0	27.5	2.0	8.0	WD1700240
25.0	**33.0**	**6.0**	**28.5**	**2.0**	**8.0**	**WD1700250**
28.0	**36.0**	**6.0**	**31.5**	**2.0**	**8.0**	**WD1700280**
30.0	38.0	6.0	33.5	2.0	8.0	WD1700300

Rod Diameter	Groove Diameter	Groove Width	Bore Diameter	Step Width	Width	TSS Part No.
d_N f8/h9	D3 H9	L_3 +0.2	D_4 H11	a_{min}	B	
32.0	**40.0**	**6.0**	**35.5**	**2.0**	**8.0**	**WD1700320**
35.0	43.0	6.0	38.5	2.0	8.0	WD1700350
36.0	44.0	6.0	39.5	2.0	8.0	WD1700360
37.0	45.0	6.0	40.5	2.0	8.0	WD1700370
38.0	46.0	6.0	41.5	2.0	8.0	WD1700380
40.0	**48.0**	**6.0**	**43.5**	**2.0**	**8.0**	**WD1700400**
42.0	50.0	6.0	45.5	2.0	8.0	WD1700420
45.0	**53.0**	**6.0**	**48.5**	**2.0**	**8.0**	**WD1700450**
46.0	54.0	6.0	49.5	2.0	8.0	WD1700460
48.0	56.0	6.0	51.5	2.0	8.0	WD1700480
50.0	**58.0**	**6.0**	**53.5**	**2.0**	**8.0**	**WD1700500**
52.0	60.0	6.0	55.5	2.0	8.0	WD1700520
55.0	63.0	6.0	58.5	2.0	8.0	WD1700550
56.0	**64.0**	**6.0**	**59.5**	**2.0**	**8.0**	**WD1700560**
60.0	68.0	6.0	63.5	2.0	8.0	WD1700600
63.0	**71.0**	**6.0**	**66.5**	**2.0**	**8.0**	**WD1700630**
65.0	73.0	6.0	68.5	2.0	8.0	WD1700650
68.0	76.0	6.0	71.5	2.0	8.0	WD1700680
70.0	**78.0**	**6.0**	**73.5**	**2.0**	**8.0**	**WD1700700**
75.0	83.0	6.0	78.5	2.0	8.0	WD1700750
80.0	**88.0**	**6.0**	**83.5**	**2.0**	**8.0**	**WD1700800**
85.0	93.0	6.0	88.5	2.0	8.0	WD1700850
90.0	**98.0**	**6.0**	**93.5**	**2.0**	**8.0**	**WD1700900**
95.0	103.0	6.0	98.5	2.0	8.0	WD1700950
100.0	**108.0**	**6.0**	**103.5**	**2.0**	**8.0**	**WD1701000**
105.0	117.0	8.2	110.0	3.0	11.0	WD1701050
110.0	**122.0**	**8.2**	**115.0**	**3.0**	**11.0**	**WD1701100**
115.0	127.0	8.2	120.0	3.0	11.0	WD1701150
120.0	132.0	8.2	125.0	3.0	11.0	WD1701200
125.0	**137.0**	**8.2**	**130.0**	**3.0**	**11.0**	**WD1701250**
130.0	142.0	8.2	135.0	3.0	11.0	WD1701300
135.0	147.0	8.2	140.0	3.0	11.0	WD1701350
140.0	**152.0**	**8.2**	**145.0**	**3.0**	**11.0**	**WD1701400**
145.0	157.0	8.2	150.0	3.0	11.0	WD1701450
150.0	162.0	8.2	155.0	3.0	11.0	WD1701500
155.0	167.0	8.2	160.0	3.0	11.0	WD1701550
160.0	**172.0**	**8.2**	**165.0**	**3.0**	**11.0**	**WD1701600**
165.0	177.0	8.2	170.0	3.0	11.0	WD1701650
170.0	182.0	8.2	175.0	3.0	11.0	WD1701700
180.0	**192.0**	**8.2**	**185.0**	**3.0**	**11.0**	**WD1701800**
185.0	197.0	8.2	190.0	3.0	11.0	WD1701850
190.0	202.0	8.2	195.0	3.0	11.0	WD1701900

Rod Diameter	Groove Diameter	Groove Width	Bore Diameter	Step Width	Width	TSS Part No.
d_N f8/h9	D3 H9	L_3 +0.2	D_4 H11	a_{min}	B	
195.0	207.0	8.2	200.0	3.0	11.0	WD1701950
200.0	**212.0**	8.2	**205.0**	**3.0**	**11.0**	**WD1702000**
205.0	220.0	9.5	212.0	3.0	13.0	WD1702050
210.0	225.0	9.5	217.0	3.0	13.0	WD1702100
220.0	**235.0**	**9.5**	**227.0**	**3.0**	**13.0**	**WD1702200**
225.0	240.0	9.5	232.0	3.0	13.0	WD1702250
240.0	255.0	9.5	247.0	3.0	13.0	WD1702400
250.0	**265.0**	**9.5**	**257.0**	**3.0**	**13.0**	**WD1702500**
260.0	275.0	9.5	267.0	3.0	13.0	WD1702600
275.0	290.0	9.5	282.0	3.0	13.0	WD1702750
280.0	**295.0**	**9.5**	**287.0**	3.0	**13.0**	**WD1702800**
290.0	305.0	9.5	297.0	3.0	13.0	WD1702900
300.0	315.0	9.5	307.0	3.0	13.0	WD1703000
310.0	325.0	9.5	317.0	3.0	13.0	WD1703100
320.0	**335.0**	**9.5**	**327.0**	**3.0**	**13.0**	**WD1703200**
350.0	365.0	9.5	357.0	3.0	13.0	WD1703500
360.0	**375.0**	**9.5**	**367.0**	**3.0**	**13.0**	**WD1703600**
370.0	385.0	9.5	377.0	3.0	13.0	WD1703700
400.0	415.0	9.5	407.0	3.0	13.0	WD1704000
440.0	455.0	9.5	447.0	3.0	13.0	WD1704400

The rod diameters in **bold** type comply with the recommendations of ISO 3320.
Intermediate sizes above 125 mm diameter can also be supplied in impact vulcanized form.
Up to 18 mm diameter, we recommend a split groove.
Other dimensions on request.

Zurcon® Scraper DA 22

Double-acting

Material:
Zurcon®

Zurcon® Scraper DA 22

Description

The scraper is a double-acting polyurethane wiper for closed groove installation. Significant improvements are achieved regarding the profile geometry and material used if compared with conventional elastomeric scrapers.

The scraper lip is designed in a particular way that it reliably scrapes off the dirt but leaves a residual oil film on the rod, which is required for correct operation. The radial squeeze is sufficient to remove particles, dust and water.

The scraping lip facing inwards is designed in a way that it assumes a sealing function even under low pressure. The static seal is achieved by a tight radial fit between the scraper body and the groove.

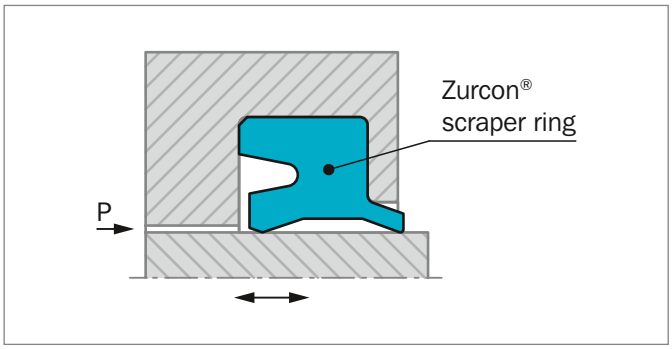

Figure 181: Scraper DA 22

ADVANTAGES

- Good scraping effect
- Wear resistant, long service life
- Retaining residual oil film
- Standard elements for standardized installation grooves.

APPLICATION EXAMPLES

Due to the outstanding wiping capacities, DA 22 scraper is recommended wherever there are dusty and humid conditions and especially for the following applications:

- ISO standard cylinders
- Hydraulic industrial cylinders
- Agriculture machinery

OPERATING CONDITIONS

Pressure Scraper Side:	Atmospheric pressure
Seal Side:	Pressures up to 2 MPa (20 bar) a relief bore must be provided with higher pressures
Speed:	Up to 1 m/s
Temperature:	-35 °C to +100 °C
Media:	Mineral oils and greases
Groove Type:	Closed

IMPORTANT NOTE

The above data are maximum values and cannot be used at the same time, e.g. the maximum operating speed depends on material type, pressure, temperature and gap value. Temperature range also depends on media.

MATERIALS

Standard application:

Zurcon® Polyurethane:	92 Shore A
Material Code:	Z201
Color:	Turquoise

Installation Recommendation

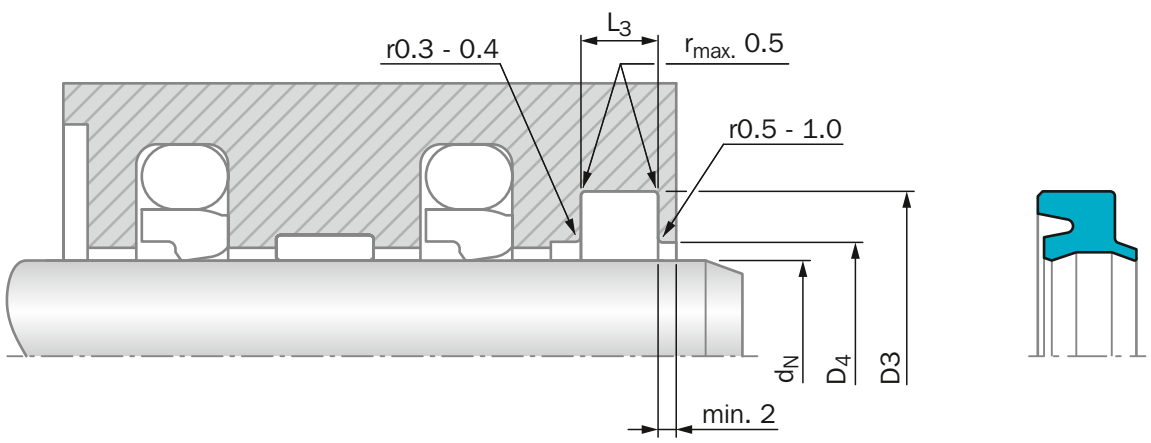

Figure 182: Installation Drawing

ORDERING EXAMPLE

Rod Diameter:	d_N = 36 mm
Groove Diameter:	D3 = 44 mm (see Example 1)
Example 1	
TSS Part No.:	WD2200360 from Table 170
Material Code:	Z201
Old Ref. No.:	Not available

TSS Article No. WD22 0 0360 - Z201

- TSS Series No.
- Type (Standard)
- Rod Diameter x 10
- Quality Index (See Table)
- Material Code

Table 170: Installation Dimensions / TSS Part Numbers

Rod Diameter	Groove Diameter	Groove Width	Bore Diameter	TSS Part No.
d_N f8/h9	D3 H9	L_3 +0.1	D_4 H11	
5.0	10.0	3.5	7.5	WD2200050
8.0	13.0	3.5	10.5	WD2200080
10.0	16.0	4.0	12.5	WD2200100
12.0	**18.0**	**4.0**	**14.5**	**WD2200120**
12.0	18.6	3.8	15.0	WD2210120
14.0	**20.0**	**4.0**	**16.5**	**WD2200140**
14.0	20.6	3.8	17.0	WD2210140
16.0	22.0	4.0	18.5	WD2200160
18.0	**24.0**	**4.0**	**20.5**	**WD2200180**
18.0	24.6	3.8	21.0	WD2210180

Rod Diameter	Groove Diameter	Groove Width	Bore Diameter	TSS Part No.
d_N f8/h9	D3 H9	L_3 +0.1	D_4 H11	
20.0	26.0	4.0	22.5	WD2200200
20.0	28.6	5.3	23.0	WD2210200
22.0	**28.0**	**4.0**	**24.5**	**WD2200220**
22.0	30.6	5.3	25.0	WD2210220
24.0	32.6	5.3	27.0	WD2210240
25.0	31.0	4.0	27.5	WD2200250
25.0	33.6	5.3	28.0	WD2210250
28.0	**36.0**	**5.0**	**31.0**	**WD2200280**
28.0	36.6	5.3	31.0	WD2210280
30.0	38.0	5.0	33.0	WD2200300
30.0	38.6	5.3	33.0	WD2210300
32.0	40.0	5.0	35.0	WD2200320
32.0	40.6	5.3	35.0	WD2210320
35.0	43.0	5.0	38.0	WD2200350
35.0	43.6	5.3	38.0	WD2210350
36.0	**44.0**	**5.0**	**39.0**	**WD2200360**
36.0	44.6	5.3	39.0	WD2210360
40.0	48.0	5.0	43.0	WD2200400
40.0	48.6	5.3	43.0	WD2210400
45.0	**53.0**	**5.0**	**48.0**	**WD2200450**
45.0	53.6	5.3	48.0	WD2210450
50.0	58.0	5.0	53.0	WD2200500
50.0	58.6	5.3	53.0	WD2210500
55.0	63.6	5.3	58.0	WD2210550
55.0	65.0	6.0	58.0	WD2200550
56.0	64.6	5.3	59.0	WD2210560
56.0	**66.0**	**6.0**	**59.0**	**WD2200560**
60.0	68.6	5.3	63.0	WD2210600
60.0	70.0	6.0	63.0	WD2200600
63.0	71.6	5.3	66.0	WD2210630
63.0	73.0	6.0	66.0	WD2200630
65.0	73.6	5.3	68.0	WD2210650
65.0	75.0	6.0	68.0	WD2200650
70.0	78.6	5.3	73.0	WD2210700
70.0	**80.0**	**6.0**	**73.0**	**WD2200700**
75.0	83.6	5.3	78.0	WD2210750
75.0	85.0	6.0	78.0	WD2200750
78.0	88.0	6.0	81.0	WD2200780
80.0	88.6	5.3	83.0	WD2210800
80.0	90.0	6.0	83.0	WD2200800
85.0	95.0	6.0	88.0	WD2200850
85.0	97.2	7.1	91.0	WD2210850

Rod Diameter	Groove Diameter	Groove Width	Bore Diameter	TSS Part No.
d_N f8/h9	D3 H9	L_3 +0.1	D_4 H11	
90.0	**100.0**	**6.0**	**93.0**	**WD2200900**
90.0	102.2	7.1	96.0	WD2210900
100.0	110.0	6.0	103.0	WD2201000
100.0	112.2	7.1	106.0	WD2211000
110.0	122.2	7.1	116.6	WD2211100
110.0	**125.0**	**8.5**	**114.0**	**WD2201100**
120.0	135.0	8.5	124.0	WD2201200
125.0	140.0	8.5	129.0	WD2201250
140.0	**155.0**	**8.5**	**144.0**	**WD2201400**
150.0	165.0	8.5	154.0	WD2201500
160.0	175.0	8.5	164.0	WD2201600
180.0	195.0	8.5	184.0	WD2201800

The sizes in **bold** type comply with ISO 6195. Installation groove Type C.
Up to 18 mm diameter we recommend a split groove.
Other sizes on request.

Zurcon® Scraper DA 24 & Venting Version

Double-acting

Material:
Zurcon®

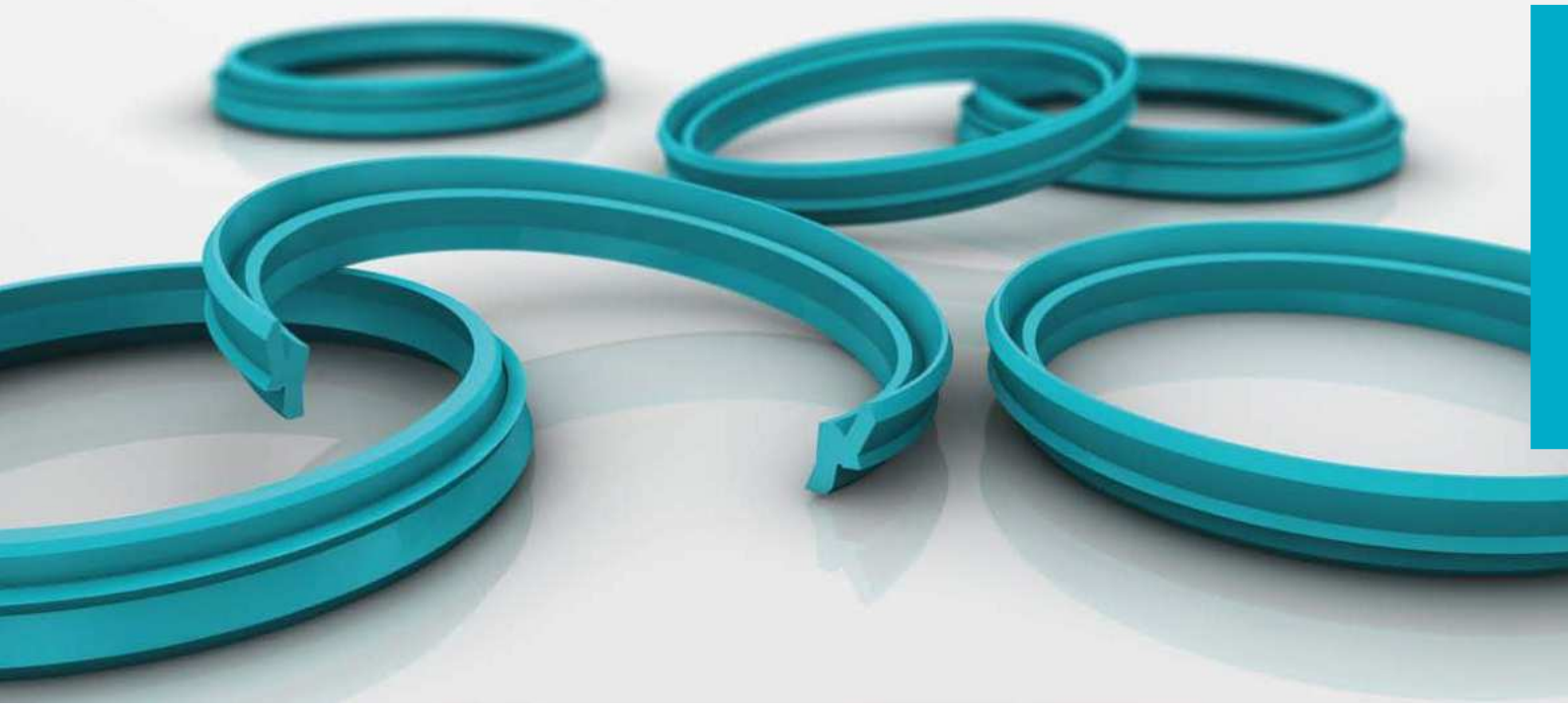

Zurcon® Scraper DA 24

Description

Zurcon® DA24 is a double-acting thermoplastic polyurethane scraper for severe operating conditions and heavy attack of dirt.

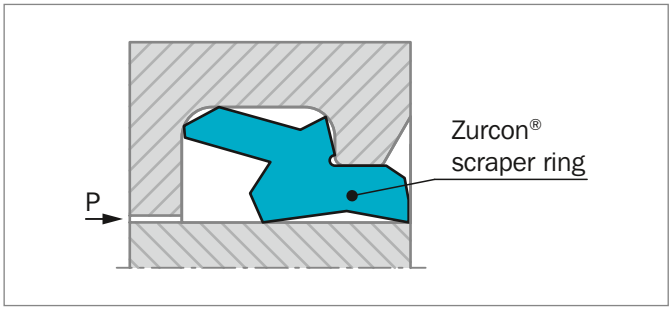

Figure 183: Scraper DA24: Standard Version

A new improved design available now in two different versions has been recently developed by Trelleborg Sealing Solutions to enhance the overall performances.

The special design of the inward-facing sealing lip contributes to an optimum contact pressure resulting in a very high scraper effect of the residual oil film thanks to the sharp, knife cut, scraping lip.

The outer scraper lip leans against the housing. This ensures an optimum sealing force and further it prevents the ingress of dirt and water across the groove bottom. Also in case of high level of external contamination and dirt or rod eccentricity under side load the scraper effect remains stable. The improved design reduces the friction with less heat generated and a longer service life.

The new design of DA24 is now available in two versions: standard and venting.

DA24 is produced in Zurcon® , the Trelleborg Sealing Solutions proprietary thermoplastic polyurethane material specially developed for sealing applications. This provides long service life under harsh working conditions and resistance against installation damage

ADVANTAGES

- Very good scraper effect of the outward lip
- Very good sealing effect due to a trimmed inner sealing lip: Provides optimum contact pressure for efficient sealing and wiping of residual oil film.
- Reliable at side steering of the piston rod
- Sturdy and wear-resistant
- Simple installation
- Advanced friction characteristics
- Limited heat generation extending service life
- Stability in the groove securing function
- Robust outer scraper lip supported by a housing recess, it ensures a high contact force on the rod

VENTING VERSION FEATURE

In some situations when there is pressure build-up behind the scraper, the scraper can be pushed out of the groove causing total sealing system failure.

Zurcon® Scraper DA24 Venting Version has axial holes through the section which operate as pressure relief valves, allowing oil to be released in the case of overpressure.

Once the pressure is build-up the outer lip is temporarily activated through the axial holes and the pressure is released avoiding system failure. With improved stability in the groove the Zurcon® Scraper DA24 Venting Version becomes one of the most efficient scrapers available on the market.

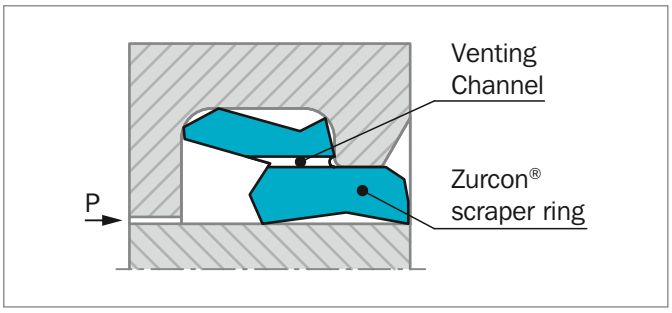

Figure 184: Scraper DA24: Venting Version

METHOD OF OPERATION FOR VENTING VERSION

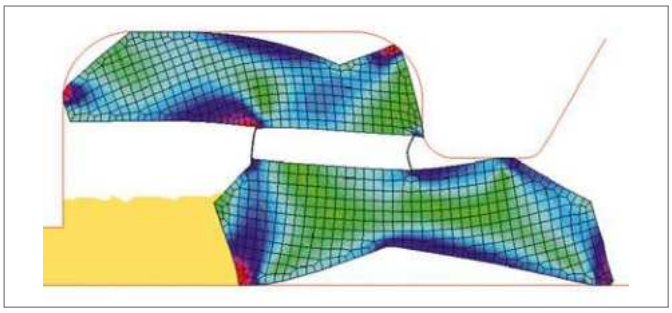

1. Pressurized oil flows through holes in the profile at the top of the scraping lip.

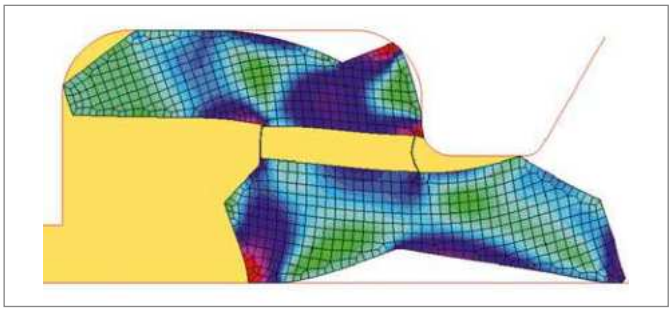

2. The scraping lip is pressed to the rod during pressure build-up.

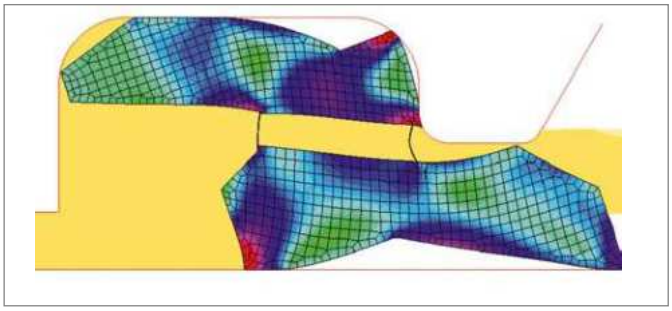

3. A gap opens up between scraping lip and housing at a certain pressure level.

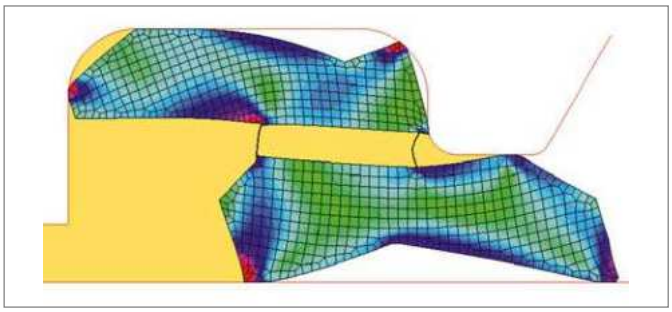

4. The oil is released and pressure is relieved.

APPLICATION EXAMPLES

The scraper DA24 is especially suitable for application in:

- Construction machinery
- Agriculture- and forestry machinery
- Mobile hydraulic
- High attack of dirt
- Side steering of piston rod

OPERATING CONDITIONS

Pressure:	standard version: max. 5 MPa venting version: max. 2 MPa
Velocity:	Up to 1 m/s at high strokes and higher speed, please contact your local Trelleborg Sealing Solutions company
Temperature:	-35 °C to +100 °C
Media:	Hydraulic fluids based on mineral oil

MATERIALS – STANDARD APPLICATION:

The scraper DA 24 consists of Zurcon® polyurethane material with excellent wear and extrusion resistance and low deformation under load.

Special Polyurethane: Zurcon® Z201 92 Shore A
Set reference: Z201
Color: Turquoise

PREMIUM MATERIALS – HYDROLYSIS RESISTANCE:

Zurcon® Z24 Premium polyurethane

Set reference: Z24

The Zurcon® polyurethane has high abrasion resistance, a low compression set, high extrusion resistance and a wide temperature range.

IMPORTANT NOTE

The above data are maximum values and cannot be used at the same time, e.g. the maximum operating speed depends on material type, pressure, temperature and gap value. Temperature range also depends on media.

Installation Recommendation

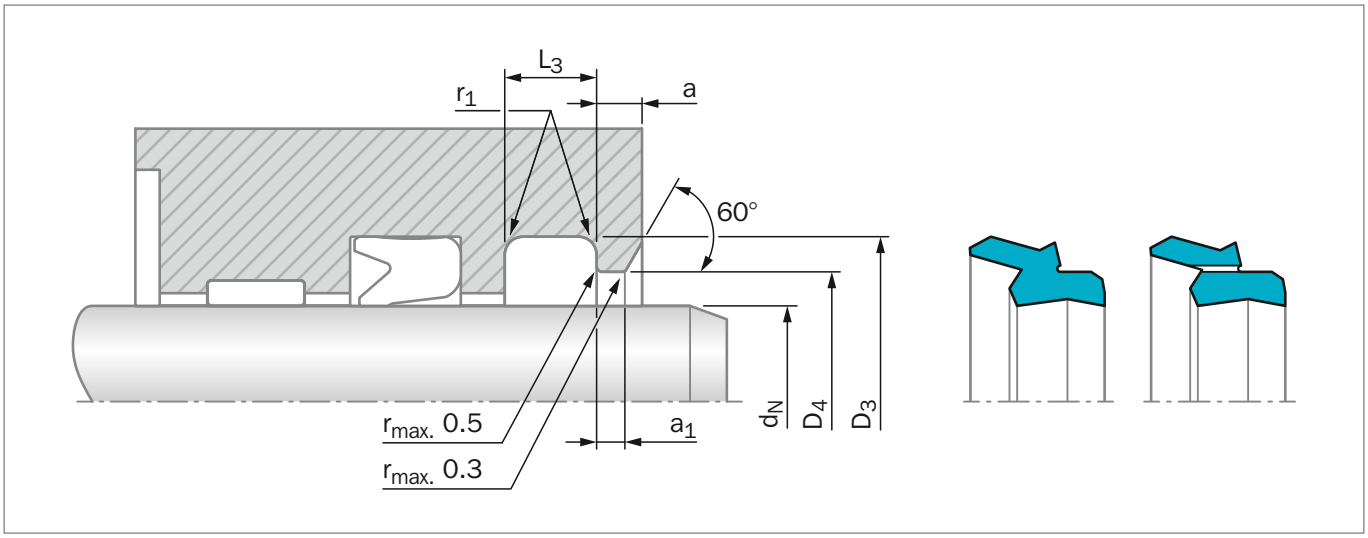

Figure 185: Installation Drawing

Table 171: Preferred Series / Order No.

Rod Diameter	Groove Diameter	Groove Width	Radius	Bore Diameter	Step Width	Step Width	TSS Article No. Standard Version
d_N f8/h9	D_3 H9	L_3 +0.15	r_1 max.	D_4 H9	a min.	a_1 min.	
45.0	53.8	6.3	1.2	49.4	3.2	2.0	WD2410450
50.0	58.8	6.3	1.2	54.4	3.2	2.0	WD2410500
56.0	64.8	6.3	1.2	60.4	3.2	2.0	WD2410560
60.0	68.8	6.3	1.2	64.4	3.2	2.0	WD2410600
70.0	82.2	8.1	1.6	76.0	4.0	2.5	WD2410700
75.0	87.2	8.1	1.6	81.0	4.0	2.5	WD2410750
80.0	92.2	8.1	1.6	86.0	4.0	2.5	WD2410800
85.0	97.2	8.1	1.6	91.0	4.0	2.5	WD2410850
90.0	102.2	8.1	1.6	96.0	4.0	2.5	WD2410900
95.0	107.2	8.1	1.6	101.0	4.0	2.5	WD2410950
100.0	112.2	8.1	1.6	106.0	4.0	2.5	WD2411000
105.0	117.2	8.1	1.6	111.0	4.0	2.5	WD2411050
110.0	122.2	8.1	1.6	116.0	4.0	2.5	WD2411100
115.0	127.2	8.1	1.6	121.0	4.0	2.5	WD2411150
125.0	137.2	8.1	1.6	131.0	4.0	2.5	WD2411250
140.0	156.0	9.5	2.0	148.0	5.0	3.0	WD2411400
150.0	166.0	9.5	2.0	158.0	5.0	3.0	WD2411500
160.0	176.0	9.5	2.0	168.0	5.0	3.0	WD2411600
170.0	186.0	9.5	2.0	178.0	5.0	3.0	WD2411700
180.0	196.0	9.5	2.0	188.0	5.0	3.0	WD2411800

Rod Diameter	Groove Diameter	Groove Width	Radius	Bore Diameter	Step Width	Step Width	TSS Article No. Standard Version
d_N f8/h9	D_3 H9	L_3 +0.15	r_1 max.	D_4 H9	a min.	a_1 min.	
200.0	216.0	9.5	2.0	208.0	5.0	3.0	WD2412000
220.0	236.0	9.5	2.0	228.0	5.0	3.0	WD2412200
240.0	256.0	9.5	2.0	248.0	5.0	3.0	WD2412400
260.0	276.0	9.5	2.0	268.0	5.0	3.0	WD2412600
280.0	296.0	9.5	2.0	288.0	5.0	3.0	WD2412800
290.0	306.0	9.5	2.0	298.0	5.0	3.0	WD2412900

Other dimensions on request

ORDERING EXAMPLE

Standard Version:

Rod Diameter:	d_N = 50 mm
Groove Diameter:	D_3 = 58.8 mm
Groove Width:	L_3 = 6.3 mm
TSS Article No.:	WD2410500 from Table 171
Material:	Standard material Z201

TSS Article No. **WD24 1 0500 - Z201**

TSS Series No.
Type (Standard)
Rod Diameter x 10
Quality Index (See Table)
Material Code

Venting Version:

Rod Diameter:	d_N = 140 mm
Groove Diameter:	D_3 = 156 mm
Groove Width:	L_3 = 9.5 mm
TSS Article No.:	WD24H1400
Material:	Standard material Z201

TSS Article No. **WD24 H 1400 - Z201**

TSS Series No.
Type (Venting Version)
Rod Diameter x 10
Quality Index (See Table)
Material Code

Scraper WRM

Single-acting

Material:
NBR Elastomer

Scraper WRM

Description

Scraper rings are essential components of any hydraulic or pneumatic equipment.

These are protection components for axial moving rods: they ensure that foreign matter is not introduced into the system, avoiding costly wear and damage to all the internal components including seals.

WRM scrapers are manufactured in nitrile elastomer with precision machined wiper lip, which produces a very effective wiping action.

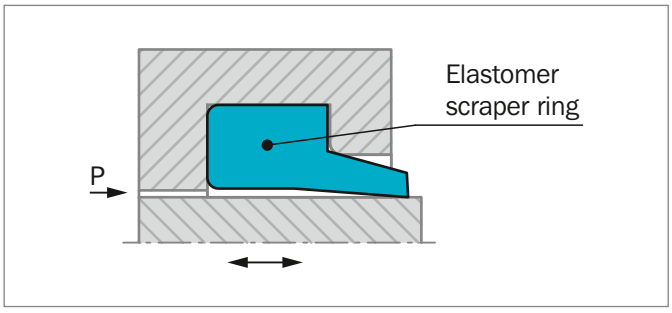

Figure 186: Scraper WRM

ADVANTAGES

- Space-saving construction
- Low cost, economical solution
- Simple, easy-construction groove
- Easy installation and removal without tools

APPLICATION EXAMPLES

Due to their outstanding wiping capacities WRM scrapers are recommended wherever there are dusty and humid conditions and especially for the following applications:

- Valve spindles
- Slide valves
- Hydraulic cylinders
- Agriculture machinery

OPERATING CONDITIONS

Speed:	Up to 1 m/s
Temperature:	-30 °C to +110 °C
Media:	Mineral oil based hydraulic fluids, polyglycol-water emulsions, water-oil emulsions
Groove Type:	Closed

IMPORTANT NOTE

The above data are maximum values and cannot be used at the same time, e.g. the maximum operating speed depends on material type, pressure, temperature and gap value. Temperature range also depends on media.

MATERIALS

Standard application

Nitrile elastomer:	NBR 90 Shore A
Material Code:	N9T60
Polypac Ref. code:	2790

Installation Recommendation

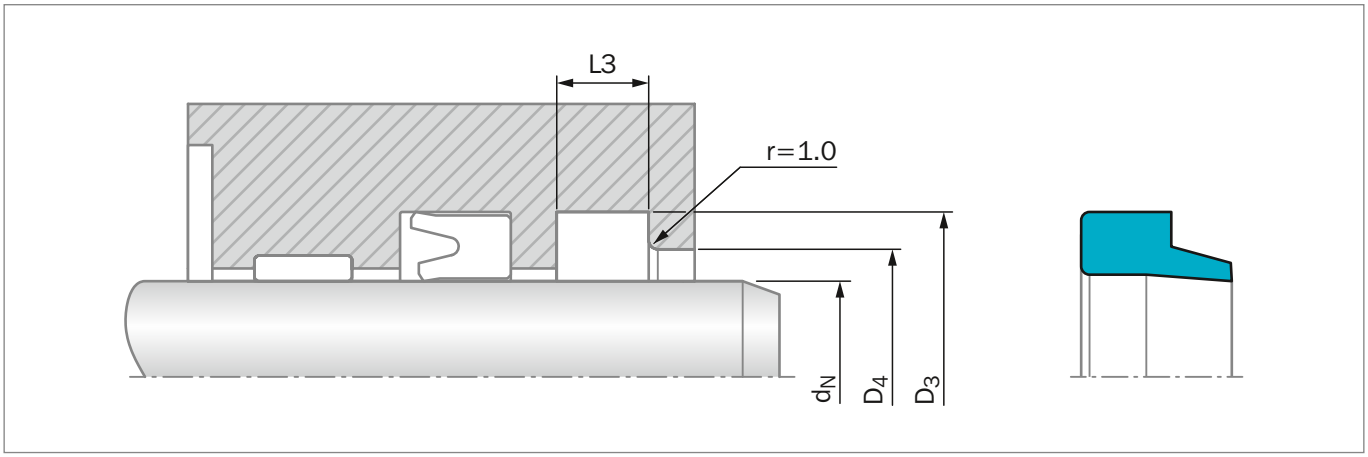

Figure 187: Installaton Drawing

ORDERING EXAMPLE

Rod Diameter:	d_N = 40 mm
TSS Part No.:	WAP000400 from Table 172
Material Code:	N9T60 (standard)
Polypac Ref.:	WRM 157188

TSS Article No. WAP0 0 0400 - N9T60

- TSS Series No.
- Type (Standard)
- Rod Diameter x 10
- Quality Index
- Material Code

Table 172: Installation Dimensions / TSS Part Numbers

Rod Diameter	Groove Diameter	Groove Width	Bore Diameter	TSS Part No.	Description
d_N f8/h9	D_3 H9	L3 +0.1	D_4 +0.2		
12.0	18.6	3.8	15.0	WAP000120	WRM047070
13.0	19.6	3.8	16.0	WAP000130	WRM051074
14.0	20.6	3.8	17.0	WAP000140	WRM055078
15.0	21.6	3.8	18.0	WAP000150	WRM059082
16.0	22.6	3.8	19.0	WAP000160	WRM062087
17.0	23.6	3.8	20.0	WAP000170	WRM066094
18.0	24.6	3.8	21.0	WAP000180	WRM070094
19.0	28.6	5.3	22.0	WAP000190	WRM074110
20.0	28.6	5.3	23.0	WAP000200	WRM078110
22.0	30.6	5.3	25.0	WAP000220	WRM086118
24.0	32.6	5.3	27.0	WAP000240	WRM094125
25.0	31.6	5.3	28.0	WAP100250	WRM098122/S
25.0	33.6	5.3	28.0	WAP000250	WRM098129
26.0	34.6	5.3	29.0	WAP000260	WRM102133

Rod Diameter	Groove Diameter	Groove Width	Bore Diameter	TSS Part No.	Description
d_N f8/h9	D_3 H9	L3 +0.1	D_4 +0.2		
27.0	35.6	5.3	30.0	WAP000270	WRM106137
28.0	36.6	5.3	31.0	WAP000280	WRM110141
30.0	38.6	5.3	33.0	WAP000300	WRM118149
31.0	41.0	6.0	34.0	WAP000310	WRM4544907
32.0	40.6	5.3	35.0	WAP000320	WRM125157
33.0	41.6	5.3	36.0	WAP000330	WRM129161
35.0	43.6	5.3	38.0	WAP000350	WRM137169
36.0	44.6	5.3	39.0	WAP000360	WRM141173
38.0	46.6	5.3	41.0	WAP000380	WRM149181
40.0	48.6	5.3	43.0	WAP000400	WRM157188
42.0	50.6	5.3	45.0	WAP000420	WRM165196
45.0	53.6	5.3	48.0	WAP000450	WRM177208
45.0	55.6	5.3	49.0	WAP100450	WRM177216
46.0	54.6	5.3	49.0	WAP000460	WRM181212
48.0	56.6	5.3	51.0	WAP000480	WRM188220
49.0	57.6	5.3	52.0	WAP000490	WRM193225
50.0	58.6	5.3	53.0	WAP000500	WRM196228
50.0*	60.6	5.3	54.0	WAP100500	WRM196236
50.8	60.9	5.8	55.5	WAP000508	WRM200237
53.0*	61.6	5.3	56.0	WAP000530	WRM208240
55.0*	63.6	5.3	58.0	WAP000550	WRM216248
55.0	65.6	5.3	59.0	WAP100550	WRM216255
60.0	68.6	5.3	63.0	WAP000600	WRM236267
63.0*	71.6	5.3	66.0	WAP000630	WRM248279
63.0	73.6	5.3	67.0	WAP100630	WRM248287
65.0	73.6	5.3	68.0	WAP000650	WRM255287
65.0	75.6	5.3	69.0	WAP100650	WRM255295
70.0*	76.0	4.3	72.0	WAP000700	WRM275299
70.0	78.6	5.3	73.0	WAP100700	WRM275307
70.0	80.6	5.3	72.0	WAP200700	WRM275314
70.0	82.6	7.1	76.0	WAP300700	WRM275322
72.0	80.6	5.3	75.0	WAP000720	WRM283317
73.0	81.6	5.3	76.0	WAP000730	WRM287318
75.0	83.6	5.3	78.0	WAP000750	WRM295326
75.0	87.2	7.1	81.0	WAP100750	WRM295345
76.5	88.7	7.1	82.5	WAP000765	WRM301348
78.0	92.2	7.1	85.0	WAP000780	WRM307362
80.0	88.6	5.3	83.0	WAP000800	WRM314346
80.0	92.6	7.1	86.0	WAP100800	WRM314362
83.0	91.6	5.3	86.0	WAP000830	WRM326358
84.0	92.0	5.3	87.0	WAP000840	WRM330362
85.0	93.6	5.3	88.0	WAP000850	WRM334366

Rod Diameter	Groove Diameter	Groove Width	Bore Diameter	TSS Part No.	Description
d_N f8/h9	D_3 H9	L3 +0.1	D_4 +0.2		
85.0	97.2	7.1	91.0	WAP100850	WRM334381
88.0	100.2	7.1	94.0	WAP000880	WRM346393
90.0	102.2	7.1	96.0	WAP000900	WRM354401
95.0	107.2	7.1	101.0	WAP000950	WRM374421
97.0	111.0	7.1	104.0	WAP000970	WRM380437
100.0	112.2	7.1	106.0	WAP001000	WRM393440
101.0	111.0	5.3	105.0	WAP001010	WRM397437
103.0	115.2	7.1	109.0	WAP001030	WRM405452
104.0	116.2	7.1	110.0	WAP001040	WRM409457
105.0	117.2	7.1	111.0	WAP001050	WRM413460
110.0	122.2	7.1	116.0	WAP001100	WRM433480
115.0	127.2	7.1	121.0	WAP001150	WRM452500
116.0	128.2	7.1	121.0	WAP001160	WRM456504
116.0	130.2	7.1	123.0	WAP101160	WRM456511
118.0*	130.2	7.1	124.0	WAP001180	WRM464511
120.0	128.6	5.3	123.0	WAP001200	WRM472504
120.0	132.2	7.1	126.0	WAP101200	WRM472519
121.0*	131.0	5.3	125.0	WAP001210	WRM476515
125.0	137.2	7.1	131.0	WAP001250	WRM492539
127.0	135.6	5.3	132.0	WAP001270	WRM500531
127.0	139.2	7.1	133.0	WAP101270	WRM500550
130.0	142.2	7.1	136.0	WAP001300	WRM511559
135.0	147.2	7.1	141.0	WAP001350	WRM531578
135.0	149.2	7.1	142.0	WAP101350	WRM531582
140.0	152.2	7.1	146.0	WAP001400	WRM551598
140.0	155.2	10.1	147.0	WAP101400	WRM551610
145.0	157.2	7.1	151.0	WAP001450	WRM570618
146.0*	158.0	6.3	152.0	WAP001460	WRM575622/1
146.05	158.25	7.1	152.05	WAP001461	WRM575622
150.0*	162.2	7.1	156.0	WAP001500	WRM590637
155.0	169.2	7.1	162.0	WAP001550	WRM610664
160.0	168.6	5.3	163.0	WAP001600	WRM629661
160.0	175.2	10.1	168.0	WAP101600	WRM629688
165.0	173.6	5.3	168.0	WAP001650	WRM649681
165.0	177.2	7.1	171.0	WAP101650	WRM649698
170.0	180.6	5.3	174.0	WAP001700	WRM669708
170.0	185.2	10.1	178.0	WAP101700	WRM669728
171.0	183.0	6.3	176.0	WAP001710	WRM673720
175.0	189.2	7.1	182.0	WAP001750	WRM688744
180.0	195.2	10.1	188.0	WAP001800	WRM708767
187.0*	195.6	5.3	190.0	WAP001870	WRM736768
196.0	210.2	7.1	203.0	WAP001960	WRM771826

Rod Diameter	Groove Diameter	Groove Width	Bore Diameter	TSS Part No.	Description
d_N f8/h9	D_3 H9	L3 +0.1	D_4 +0.2		
197.0	219.0	6.3	202.0	WAP001970	WRM775823
200.0	215.2	10.1	207.0	WAP002000	WRM787847
210.0	224.2	7.1	217.0	WAP002100	WRM826883
210.0	225.0	7.0	217.0	WAP102100	WRM826885
219.5	233.7	7.1	226.5	WAP002195	WRM860919
223.0	235.0	6.3	228.0	WAP002230	WRM878925
244.5	258.7	7.1	251.5	WAP002445	WRM9621017
249.0	261.0	6.3	254.0	WAP002490	WRM9801027
260.0	275.2	10.1	268.0	WAP002600	WRM10241078

* Available upon request

Zurcon® Scraper ASW

Single-acting

Material:
Zurcon®

Zurcon® Scraper ASW

Description

The scraper ASW is a single-acting polyurethane scraper.

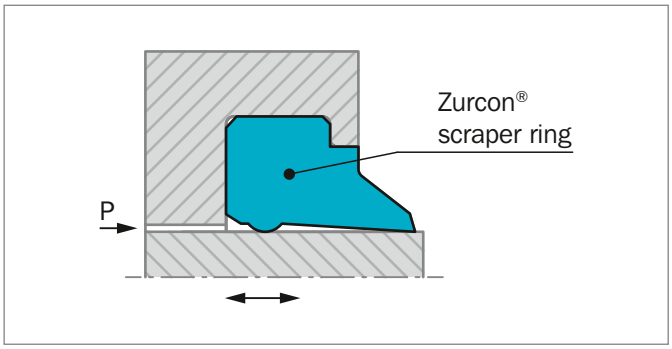

Figure 188: Scraper ASW

The special feature of this scraper is an additional supporting bead on the inner surface. It prevents tilting or twisting of the scraper in the groove. At the same time this support improves the firm seating in the groove, thus preventing the penetration of impurities via the back of the scraper. This represents a technical improvement compared with similar scraper types.

ADVANTAGES

- Simple groove design
- Very good scraping effect, wear resistant
- No tilting or twisting in the groove
- Simple installation
- Flush fitting with the outer surface

OPERATING CONDITIONS

Speed:	Up to 1 m/s
Temperature:	-35 °C to +100 °C
Media:	Mineral oil-based hydraulic fluids.

IMPORTANT NOTE

The above data are maximum values and cannot be used at the same time, e.g. the maximum operating speed depends on material type, pressure, temperature and gap value. Temperature range also depends on media.

MATERIAL

The standard material is a wear resistant Zurcon® polyurethane.

Standard material:	Polyurethane, 92 Shore A Material No. Z201
Color:	Turquoise

Installation Recommendation

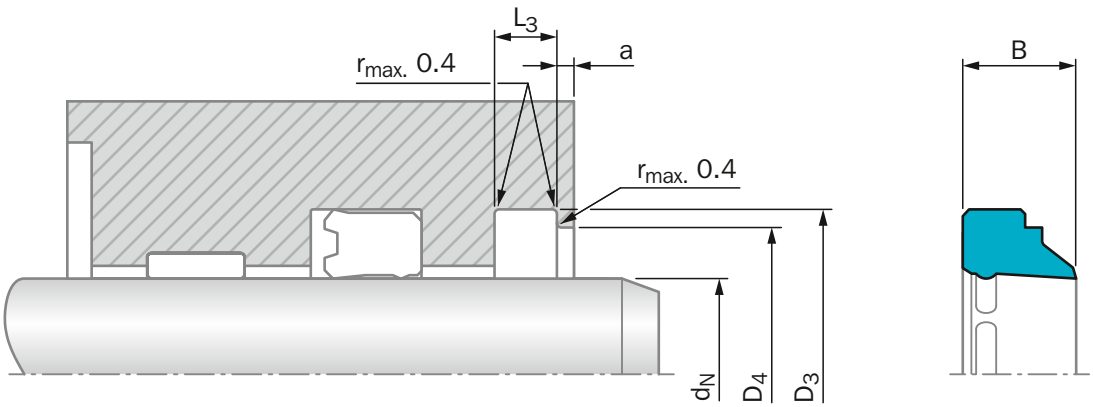

Figure 189: Installation Drawing

ORDERING EXAMPLE

Scraper ASW

Rod Diameter:	d_N = 50.0 mm
TSS Part No.:	WSW000500 from Table 173
Material:	Z201

TSS Article No. **WSW0 0 0500 - Z201**

- TSS Series No.
- Type (Standard)
- Rod Diameter x 10
- Quality Index
- Material Code

Table 173: Installation Dimensions / TSS Part Numbers

Rod Diameter	Groove Diameter	Groove Width	Bore Diameter	Step Width	Width	TSS Part No.
d_N f8/h9	D_3 H9	L_3 +0.2	D_4 H11	a min	B	
6.0	**10.0**	**2.0**	**9.0**	**1.0**	**4.0**	**WSW000060**
8.0	**14.0**	**2.6**	**12.0**	**1.0**	**5.0**	**WSW000080**
10.0	**16.0**	**2.6**	**14.0**	**1.0**	**5.0**	**WSW000100**
10.0	**18.0**	**4.0**	**16.0**	**1.0**	**7.0**	**WSW100100**
12.0	**18.0**	**2.6**	**16.0**	**1.0**	**5.0**	**WSW000120**
12.0	**20.0**	**4.0**	**18.0**	**1.0**	**7.0**	**WSW100120**
14.0	**20.0**	**2.6**	**18.0**	**1.0**	**5.0**	**WSW000140**
14.0	**22.0**	**4.0**	**20.0**	**1.0**	**7.0**	**WSW100140**
15.0	23.0	4.0	21.0	1.0	7.0	WSW000150
16.0	**24.0**	**4.0**	**22.0**	**1.0**	**7.0**	**WSW000160**
18.0	**26.0**	**4.0**	**24.0**	**1.0**	**7.0**	**WSW000180**
20.0	**26.0**	**2.6**	**24.0**	**1.0**	**5.0**	**WSW100200**

Rod Diameter	Groove Diameter	Groove Width	Bore Diameter	Step Width	Width	TSS Part No.
d_N f8/h9	D_3 H9	L_3 +0.2	D_4 H11	a min	B	
20.0	**28.0**	**4.0**	**26.0**	**1.0**	**7.0**	**WSW000200**
22.0	**30.0**	**4.0**	**28.0**	**1.0**	**7.0**	**WSW000220**
24.0	32.0	4.0	30.0	1.0	7.0	WSW000240
25.0	**31.0**	**2.6**	**29.0**	**1.0**	**5.0**	**WSW100250**
25.0	**33.0**	**4.0**	**31.0**	**1.0**	**7.0**	**WSW000250**
28.0	**36.0**	**4.0**	**34.0**	**1.0**	**7.0**	**WSW000280**
30.0	36.0	2.6	34.0	1.0	5.0	WSW100300
30.0	38.0	4.0	36.0	1.0	7.0	WSW000300
32.0	**40.0**	**4.0**	**38.0**	**1.0**	**7.0**	**WSW000320**
34.0	42.0	4.0	40.0	1.0	7.0	WSW000340
35.0	43.0	4.0	41.0	1.0	7.0	WSW000350
36.0	**44.0**	**4.0**	**42.0**	**1.0**	**7.0**	**WSW000360**
38.0	46.0	4.0	44.0	1.0	7.0	WSW000380
40.0	**48.0**	**4.0**	**46.0**	**1.0**	**7.0**	**WSW000400**
42.0	50.0	4.0	48.0	1.0	7.0	WSW000420
45.0	**53.0**	**4.0**	**51.0**	**1.0**	**7.0**	**WSW000450**
50.0	**58.0**	**4.0**	**56.0**	**1.0**	**7.0**	**WSW000500**
52.0	60.0	4.0	58.0	1.0	7.0	WSW000520
55.0	63.0	4.0	61.0	1.0	7.0	WSW000550
56.0	**64.0**	**4.0**	**62.0**	**1.0**	**7.0**	**WSW000560**
60.0	68.0	4.0	66.0	1.0	7.0	WSW000600
63.0	**71.0**	**4.0**	**69.0**	**1.0**	**7.0**	**WSW000630**
65.0	73.0	4.0	71.0	1.0	7.0	WSW000650
70.0	**78.0**	**4.0**	**76.0**	**1.0**	**7.0**	**WSW000700**
75.0	83.0	4.0	81.0	1.0	7.0	WSW000750
80.0	**88.0**	**4.0**	**86.0**	**1.0**	**7.0**	**WSW000800**
85.0	93.0	4.0	91.0	1.0	7.0	WSW000850
90.0	**98.0**	**4.0**	**96.0**	**1.0**	**7.0**	**WSW000900**
100.0	**108.0**	**4.0**	**106.0**	**1.0**	**7.0**	**WSW001000**
105.0	113.0	4.0	111.0	1.0	7.0	WSW001050
110.0	**122.0**	**5.5**	**119.0**	**1.5**	**10.0**	**WSW001100**
120.0	132.0	5.5	129.0	1.5	10.0	WSW001200
125.0	**137.0**	**5.5**	**134.0**	**1.5**	**10.0**	**WSW001250**
140.0	**152.0**	**5.5**	**149.0**	**1.5**	**10.0**	**WSW001400**
150.0	162.0	5.5	159.0	1.5	10.0	WSW001500
160.0	**172.0**	**5.5**	**169.0**	**1.5**	**10.0**	**WSW001600**
180.0	**192.0**	**5.5**	**189.0**	**1.5**	**10.0**	**WSW001800**

The rod diameters in **bold** type comply with the recommendations of ISO 3320.
Other dimensions on request.
A split groove is required up to 14 mm diameter.

Zurcon® Scraper WNE

Single-acting

Dynamic + Static Sealing Lip

Material:
Zurcon®

Zurcon® Scraper WNE

Description

These scrapers are manufactured in polyurethane. The static sealing lip ensures against the intrusion of dirt and fluids over the outer diameter.

The scraper WNE has an interference to the groove outside diameter.

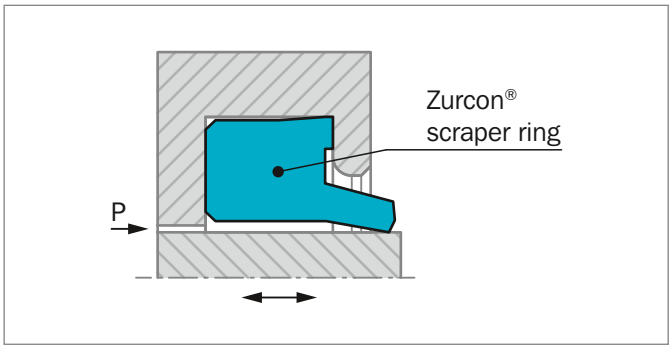

Figure 190: Scraper WNE

ADVANTAGES

- High wear resistance
- Good prevention against external fluid intrusion
- Easy installation
- Space-saving construction

APPLICATION EXAMPLES

These scrapers are recommended wherever there are dusty and humid conditions and especially for the following applications:

- Mobile hydraulic machinery
- Agriculture machinery

OPERATING CONDITIONS

Speed:	Up to 1 m/s
Temperature:	-35 °C to +100 °C
Media:	Mineral oil based hydraulic fluids
Groove Type:	Closed

IMPORTANT NOTE

The above data are maximum values and cannot be used at the same time, e.g. the maximum operating speed depends on material type, pressure, temperature and gap value. Temperature range also depends on media.

MATERIALS

Zurcon® Polyurethane:	92 Shore A
Material code:	Z201
Color:	Turquoise

Installation Recommendation

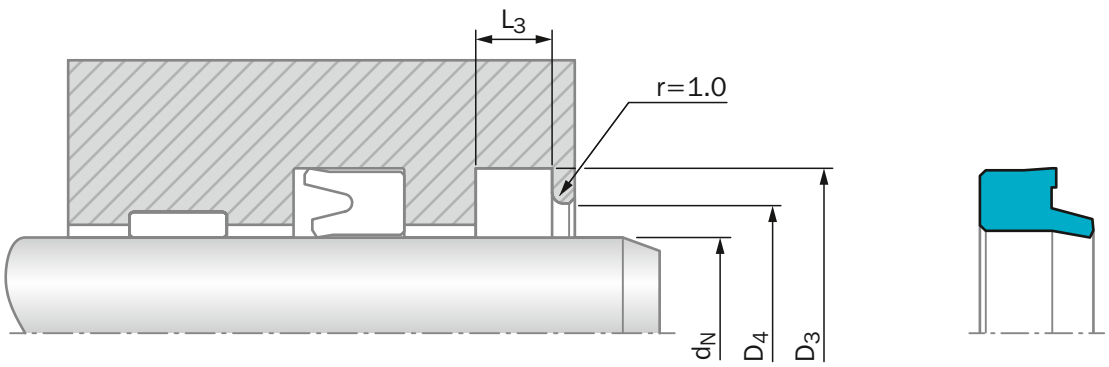

Figure 191: Installation Drawing

ORDERING EXAMPLE

For WNE scrapers

Rod Diameter:	d_N = 45 mm
Groove Diameter:	D_3 = 53.6 mm
TSS Part No.:	WNE000450 from Table 174
Material Code:	Z201

TSS Article No. WNE0 0 0450 - Z201

- TSS Series No. — WNE
- Type (Standard) — 0
- Rod Diameter x 10 — 0450
- Quality Index — -
- Material Code — Z201

Table 174: Installation Dimensions / TSS Part Numbers

Rod Diameter	Groove Diameter	Groove Width	Bore Diameter	TSS Part No.
d_N h9	D_3 H11	L_3 +0.1	D_4 +0.2	
8.0	14.6	3.8	11.0	WNE000080
10.0	16.6	3.8	13.0	WNE000100
12.0	18.6	3.8	15.0	WNE000120
14.0	20.6	3.8	17.0	WNE000140
15.0	21.6	3.8	18.0	WNE000150
16.0	22.6	3.8	19.0	WNE000160
18.0	24.6	3.8	21.0	WNE000180
20.0	28.6	5.3	23.0	WNE000200
22.0	30.6	5.3	25.0	WNE000220
24.0	32.6	5.3	27.0	WNE000240
25.0	33.6	5.3	28.0	WNE000250
28.0	36.6	5.3	31.0	WNE000280
30.0	38.0	5.3	33.0	WNE000300
30.0	38.6	5.3	33.0	WNE100300

Rod Diameter	Groove Diameter	Groove Width	Bore Diameter	TSS Part No.
d_N h9	D_3 H11	L_3 +0.1	D_4 +0.2	
32.0	40.6	5.3	35.0	WNE000320
35.0	43.0	5.3	38.0	WNE000350
35.0	43.6	5.3	38.0	WNE100350
36.0	44.6	5.3	39.0	WNE000360
38.0	46.6	5.3	41.0	WNE000380
40.0	48.6	5.3	43.0	WNE000400
45.0	53.6	5.3	48.0	WNE000450
46.0	54.6	5.3	49.0	WNE000460
50.0	58.0	5.3	53.0	WNE000500
50.0	58.6	5.3	53.0	WNE100500
55.0	63.6	5.3	58.0	WNE000550
56.0	64.6	5.3	59.0	WNE000560
60.0	68.6	5.3	63.0	WNE200600
61.0	69.6	5.3	64.0	WNE000610
63.0	71.6	5.3	66.0	WNE000630
65.0	73.6	5.3	68.0	WNE000650
70.0	78.6	5.3	73.0	WNE100700
75.0	83.6	5.3	78.0	WNE000750
80.0	88.6	5.3	83.0	WNE000800
85.0	97.2	7.1	91.0	WNE000850
90.0	102.2	7.1	96.0	WNE000900
95.0	107.2	7.1	101.0	WNE000950
100.0	112.2	7.1	106.0	WNE101000
110.0	122.2	7.1	116.0	WNE001100
120.0	132.0	7.1	126.0	WNE001200
125.0	137.2	7.1	131.0	WNE001250
135.0	147.2	7.1	141.0	WNE001350
140.0	152.2	7.1	146.0	WNE001400
160.0	175.2	10.1	168.0	WNE101600
180.0	195.2	10.1	188.0	WNE001800
200.0	215.2	10.1	208.0	WNE002000

Zurcon® Scraper WNV

Double-acting

Material:
Zurcon®

Zurcon® Scraper WNV

Description

WNV is a double acting scraper in material Zurcon® polyurethane Z 201. The dynamic scraping lip is specially designed with an additional inwards sealing edge to keep the residual oil film in the system. If the volume of this oil film can not be backpumped by the main rod seal (e.g. u.cup) a pressure built up between u-cup and scraper will be prevented by releasing this pressure by liftening of the scraper lip.

The static sealing lip and edge respectively ensure against the intrusion of dirt and fluids (e.g. water) over the outer diameter of the scraper. The support on the reverse side of the scraper prevents it from twisting in the groove.

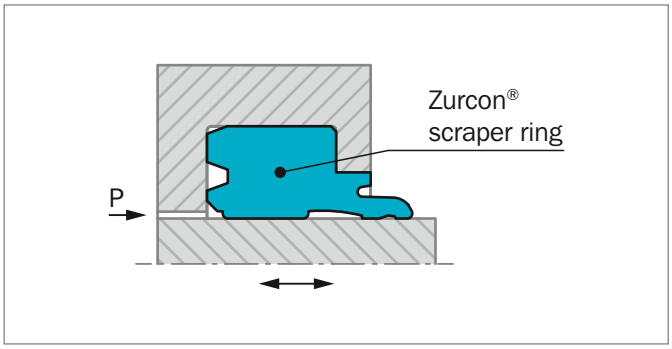

Figure 192: Scraper WNV

ADVANTAGES

- Double acting
- Pressure release function
- Good static sealing performance due to additional seal lip at the housing
- Stable position of scraper in the housing
- Support bead with notches to support release function
- Housings in accordance to ISO 6195 type A

APPLICATION EXAMPLES

- Mobile hydraulic machinery
- ISO-standard cylinders application
- Agriculture machinery
- Lift trucks
- Cargo tailboards
- Steering cylinders

OPERATING CONDITIONS

Speed:	Up to 1 m/s
Temperature:	-35 °C to +100 °C
Media:	Mineral oil based hydraulic fluids
Groove Type:	Closed

IMPORTANT NOTE

The above data are maximum values and cannot be used at the same time, e.g. the maximum operating speed depends on material type, pressure, temperature and gap value. Temperature range also depends on media.

MATERIALS

Standard application:

Zurcon® Polyurethane:	92 Shore A
Material code:	Z201
Color:	turquoise

Installation Recommendation

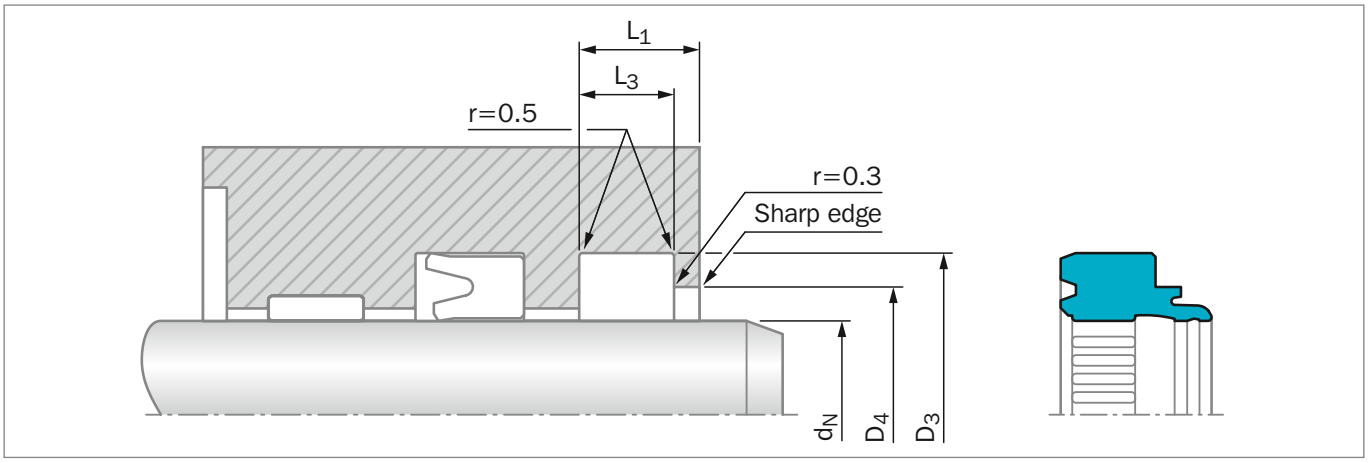

Figure 193: Installation Drawing

ORDERING EXAMPLE

Rod Diameter:	d_N = 45.0 mm
Groove Diameter:	D_3 = 53.0 mm
TSS Part No.:	WNV000450 from Table 175
Material Code:	Z201

TSS Article No. WNV0 0 0450 - Z201

- TSS Series No. — WNV0
- Type (Standard) — 0
- Rod Diameter x 10 — 0450
- Quality Index (See Table) — -
- Material Code — Z201

Table 175: Installation Dimensions / TSS Part Numbers

Rod Diameter	Groove Diameter	Bore Diameter	Groove Width	Depth	TSS Part No.
d_N h9	D_3 H8	D_4 H8	L_3 +0.2	L_1 +0.2	
16	24	21.5	5.0	7.0	WNV000160
18	26	23.5	5.0	7.0	WNV000180
20	28	25.5	5.0	7.0	WNV000200
25	33	30.5	5.0	7.0	WNV000250
30	38	35.5	5.0	7.0	WNV000300
32	40	37.5	5.0	7.0	WNV000320
35	43	40.5	5.0	7.0	WNV000350
40	48	45.5	5.0	7.0	WNV000400
45	53	50.5	5.0	7.0	WNV000450
50	58	55.5	5.0	7.0	WNV000500
60	68	65.5	5.0	7.0	WNV100600
70	80	77	6.3	8.3	WNV000700
80	90	87	6.3	8.3	WNV000800
100	115	110	9.5	12	WNV001000

The rod diameters in **bold** type comply with the recommendations of ISO 6195 Type A installation dimensions.

Scraper WSA

Single-acting

With Metal Case

For open Groove Assembly

Material:
NBR and Metal

Scraper WSA

Description

The scraper WSA is a mold-vulcanised single-acting elastomer scraper, with integral metal reinforcement for open groove assembly. In conjunction with the scraper oversize, an exact fit is obtained in the housing.

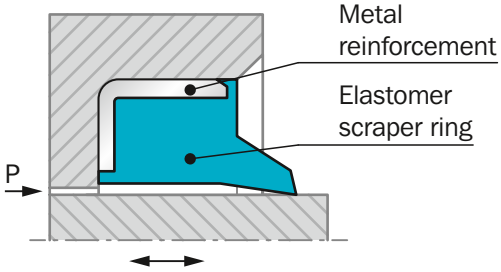

Figure 194: Scraper WSA

ADVANTAGES

- Space-saving construction
- Low cost, economical solution
- Simple, easy-construction groove
- Firm fit in the groove due to metallic press fit

APPLICATION EXAMPLES

- Hydraulic cylinders
- Agriculture machinery
- Construction machinery
- Lift trucks
- Mobile hydraulic

OPERATING CONDITIONS

Speed:	Up to 1 m/s
Temperature:	-30 °C to +110 °C
Media:	Mineral oil based hydraulic fluids. polyglycol-water emulsions, water-oil emulsions
Groove Type:	Open

IMPORTANT NOTE

The above data are maximum values and cannot be used at the same time, e.g. the maximum operating speed depends on material type, pressure, temperature and gap value. Temperature range also depends on media.

MATERIALS

Standard application:

Material: NBR 90 Shore A + Metal

TSS code: N9MN

Installation Recommendation

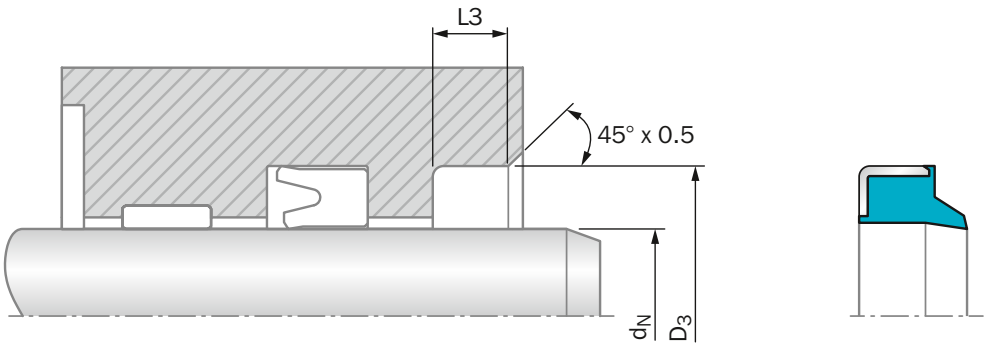

Figure 195: Installation Drawing

ORDERING EXAMPLE

Rod Diameter:	d_N = 35 mm
Groove Diameter:	D_3 = 45 mm
TSS Part No.:	WSA000350 from Table 176
Material Set-Code TSS:	N9MN

TSS Article No. WSA0 0 0350 - N9MN

- TSS Series No. — WSA0
- Type (Standard) — 0
- Rod Diameter x 10 — 0350
- Quality Index (See Table) — -
- Material Set-Code — N9MN

Table 176: Installation Dimensions / TSS Part Numbers

Rod Diameter	Groove Diameter	Groove Width	TSS Part No.
d_N h9	D_3 H8	L_3 +0.1	
6.0	13.0	3.0	WSA000060
8.0	15.0	3.0	WSA000080
10.0	16.0	3.0	WSA000100
10.0	**18.0**	**5.0**	**WSA100100**
12.0	18.0	5.0	WSA200120
12.0	20.0	4.0	WSA000120
12.0	22.0	5.0	WSA100120
13.0	18.0	3.0	WSA000130
14.0	20.0	4.0	WSA100140
14.0	22.0	3.0	WSA000140
16.0	22.0	4.0	WSA000160
16.0	26.0	5.0	WSA200160
16.0	28.0	5.0	WSA300160
18.0	26.0	5.0	WSA000180

Rod Diameter	Groove Diameter	Groove Width	TSS Part No.
d_N h9	D_3 H8	L_3 +0.1	
18.0	28.0	5.0	WSA300180
18.0	**28.0**	**7.0**	**WSA100180**
20.0	26.0	4.0	WSA000200
20.0	28.0	3.5	WSA200200
20.0	28.0	5.0	WSA300200
20.0	30.0	4.0	WSA400200
20.0	30.0	5.0	WSA500200
20.0	**30.0**	**7.0**	**WSA600200**
22.0	28.0	5.0	WSA000220
22.0	32.0	5.0	WSA200220
22.0	**32.0**	**7.0**	**WSA100220**
24.0	35.0	5.0	WSA000240
25.0	36.5	5.0	WSA200250
25.0	35.0	5.0	WSA000250
25.0	**35.0**	**7.0**	**WSA100250**
28.0	38.0	5.0	WSA000280
28.0	40.0	7.0	WSA100280
30.0	40.0	5.0	WSA000300
30.0	40.0	7.0	WSA100300
30.0	45.0	5.0	WSA200300
32.0	42.0	5.0	WSA000320
32.0	42.0	7.0	WSA400320
32.0	44.0	4.0	WSA300320
32.0	45.0	4.0	WSA100320
32.0	45.0	7.0	WSA200320
35.0	45.0	7.0	WSA000350
36.0	45.0	7.0	WSA000360
38.0	48.0	7.0	WSA000380
40.0	50.0	5.0	WSA100400
40.0	50.0	5.0	WSA000400
40.0	**50.0**	**7.0**	**WSA200400**
42.0	52.0	7.0	WSA000420
45.0	55.0	5.0	WSA100450
45.0	**55.0**	**7.0**	**WSA000450**
50.0	56.0	5.0	WSA000500
50.0	60.0	5.0	WSA200500
50.0	60.0	5.0	WSA500500
50.0	**60.0**	**7.0**	**WSA300500**
50.0	65.0	7.0	WSA400500
52.0	62.0	7.0	WSA000520
55.0	63.0	7.0	WSA000550
55.0	65.0	5.0	WSA200550

Rod Diameter	Groove Diameter	Groove Width	TSS Part No.
d_N h9	D_3 H8	L_3 +0.1	
55.0	65.0	7.0	WSA100550
55.0	70.0	7.0	WSA300550
56.0	**66.0**	**7.0**	**WSA000560**
60.0	70.0	5.0	WSA200600
60.0	70.0	7.0	WSA000600
60.0	74.0	5.0	WSA100600
63.0	75.0	7.0	WSA000630
65.0	75.0	5.0	WSA100650
65.0	75.0	7.0	WSA000650
70.0	80.0	5.0	WSA100700
70.0	**80.0**	**7.0**	**WSA000700**
75.0	83.0	7.0	WSA100750
75.0	85.0	7.0	WSA000750
80.0	88.0	7.0	WSA100800
80.0	**90.0**	**7.0**	**WSA000800**
85.0	95.0	7.0	WSA000850
90.0	**100.0**	**7.0**	**WSA000900**
95.0	105.0	7.0	WSA000950
100.0	110.0	7.0	WSA001000
105.0	115.0	7.0	WSA001050
110.0	120.0	7.0	WSA001100
115.0	125.0	7.0	WSA001150
120.0	130.0	7.0	WSA001200
120.0	135.0	7.0	WSA101200
125.0	**140.0**	**9.0**	**WSA001250**
130.0	145.0	9.0	WSA001300
135.0	145.0	7.0	WSA001350
140.0	**155.0**	**9.0**	**WSA001400**
140.0	160.0	10.0	WSA101400
150.0	165.0	9.0	WSA001500
160.0	**175.0**	**9.0**	**WSA001600**
170.0	185.0	10.0	WSA001700
175.0	190.0	9.0	WSA001750
180.0	195.0	10.0	WSA001800
200.0	220.0	12.0	WSA002000
220.0	235.0	10.0	WSA002200
270.0	295.0	12.0	WSA002700

The sizes in **bold** type comply with ISO 6195. installation groove Type B. Other sizes on request.
The listed products are technically equivalent but availability and pricing may vary.

Zurcon® Scraper SWP

Single-acting

Metal Reinforcement

For open Groove Assembly

Material:
Zurcon® + Metal

Zurcon® Scraper SWP

Description

SWP are polyurethane manufactured lipped wipers with integrated metal reinforcement for open groove assembly. These are typically used in severe applications where there is abrasion due to solid matter on rod surface.

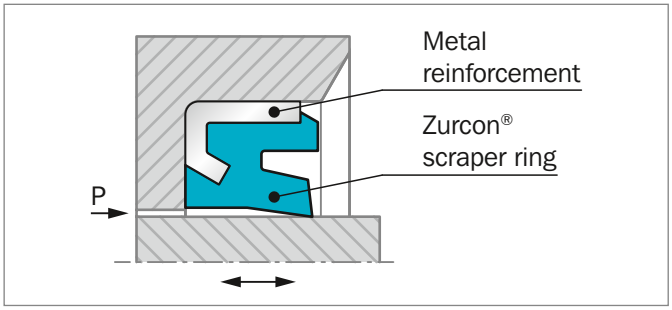

Figure 196: Scraper SWP

ADVANTAGES

- Space-saving construction
- Simple small installation groove
- Firm fit in the groove due to metallic press fit
- At regreasing of drag bearing, the scraper lip opens at low overpressure; old grease can escape
- High wear resistance

APPLICATION EXAMPLES

Due to their outstanding wiping capacities SWP scrapers are recommended wherever there are dusty and humid conditions and especially for the following applications:

- Mobile hydraulic machinery
- Construction machinery
- Link pin seals
- Lift trucks
- Truck cargo cranes
- Agriculture machinery

OPERATING CONDITIONS

Speed:	Up to 1 m/s
Temperature:	-35 °C to +100 °C
Media:	Mineral oil based hydraulic fluids
Groove Type:	Open

IMPORTANT NOTE

The above data are maximum values and cannot be used at the same time, e.g. the maximum operating speed depends on material type, pressure, temperature and gap value. Temperature range also depends on media.

MATERIALS

Standard application

Zurcon® Polyurethane:	92 Shore A
Color:	turquoise
Metal case:	non alloyed steel DIN 1624
Material Set-Code:	Z2022

Installation Recommendation

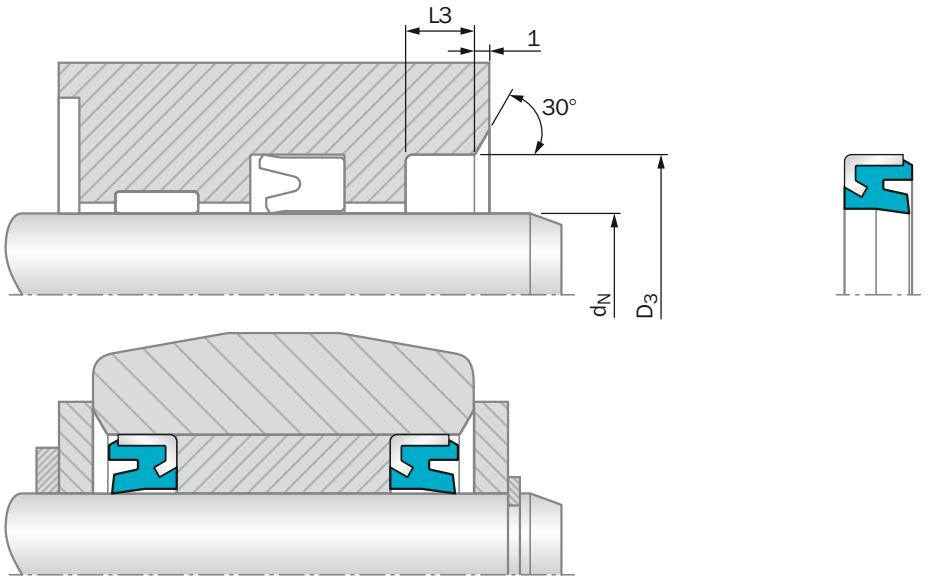

Link Pin Seal

Figure 197: Installation Drawing

ORDERING EXAMPLE

Rod Diameter:	d_N = 40 mm
Groove Diameter:	D_3 = 50 mm
TSS Part No.:	WSP000400 from Table 177
Material Set-Code:	Z2022 (standard)
Polypac Ref.:	SWP 4050

TSS Article No. WSP0 0 0400 - Z2022

- TSS Series No. — WSP0
- Type (Standard) — 0
- Rod Diameter x 10 — 0400
- Quality Index (See Table) — -
- Material Set-Code — Z2022

Table 177: Installation Dimensions / TSS Part Numbers

Rod Diameter	Groove Diameter	Groove Width	TSS Part No.	Description
d_N h9	D_3 H8	L3 +0.1		
25.0	38.0	7.5	WSP000250	SWP2538
30.0	40.0	4.0	WSP000300	*SWP3040
35.0	45.0	4.0	WSP000350	*SWP3545
35.0	50.0	7.5	WSP100350	SWP3550
36.0	48.0	6.0	WSP000360	SWP3648
38.0	50.0	7.5	WSP000380	SWP3850
40.0	50.0	4.0	WSP000400	*SWP4050
40.0	52.0	6.0	WSP100400	SWP4052
45.0	55.0	3.2	WSP000450	*SWP4555/1

Rod Diameter	Groove Diameter	Groove Width	TSS Part No.	Description
d_N	D_3	L3		
h9	H8	+0.1		
45.0	55.0	4.0	WSP100450	*SWP4555
45.0	60.0	7.5	WSP200450	SWP4560
50.0	60.0	4.0	WSP000500	*SWP5060
50.0	63.0	4.0	WSP100500	*SWP5063
50.0	65.0	7.5	WSP200500	SWP5065
55.0	65.0	3.2	WSP000550	*SWP5565
55.0	68.0	4.0	WSP100550	*SWP5568
56.0	70.0	7.5	WSP000560	SWP5670
60.0	75.0	4.0	WSP000600	*SWP6075/1
60.0	75.0	7.5	WSP100600	SWP6075
63.0	78.0	7.5	WSP000630	SWP6378
65.0	80.0	5.0	WSP000650	*SWP6580/1
65.0	80.0	7.5	WSP100650	SWP6580
70.0	80.0	5.0	WSP000700	*SWP7080
70.0	84.0	8.0	WSP100700	SWP7084
70.0	85.0	4.0	WSP200700	SWP7085/1
70.0	85.0	7.5	WSP300700	SWP7085
71.0	86.0	5.0	WSP000710	*SWP7186
75.0	90.0	7.5	WSP000750	SWP7590
75.0	95.0	10.0	WSP100750	SWP7595
76.5	96.5	10.0	WSP000765	SWP7696
80.0	95.0	5.0	WSP000800	*SWP8095/1
80.0	95.0	7.5	WSP100800	SWP8095
80.0	100.0	10.0	WSP200800	SWP80100
85.0	100.0	4.0	WSP000850	*SWP85100/1
85.0	100.0	10.0	WSP100850	SWP85100
85.0	105.0	10.0	WSP200850	SWP85105
90.0	104.0	8.0	WSP000900	SWP90104
90.0	105.0	6.0	WSP100900	*SWP90105
90.0	110.0	10.0	WSP200900	SWP90110
95.0	115.0	10.0	WSP000950	SWP95115
99.0	115.0	7.5	WSP000990	SWP99115
100.0	115.0	4.0	WSP001000	*SWP100115/2
100.0	115.0	7.5	WSP201000	SWP100115
100.0	120.0	10.0	WSP301000	SWP100120
110.0	125.0	4.0	WSP001100	SWP110125/1
110.0	125.0	9.0	WSP101100	SWP110125
110.0	130.0	10.0	WSP201100	SWP110130
115.0	130.0	7.5	WSP001150	SWP115130
115.0	130.0	9.0	WSP101150	SWP115130/1
120.0	140.0	10.0	WSP001200	SWP120140

Rod Diameter	Groove Diameter	Groove Width	TSS Part No.	Description
d_N h9	D_3 H8	L3 +0.1		
130.0	145.0	7.5	WSP001300	SWP130145
160.0	175.0	10.0	WSP001600	SWP160175
190.0	210.0	10.0	WSP001900	SWP190210

* Can be used for "Link Pin Seal"

Metal Scraper

Single-acting

Metal and Elastomer Scrapers Lips

Material:
NBR, Metal and Brass

Metal Scraper

Description

The metal scraper is a single-acting special scraper with two different scraper lips - a thin metallic lip and a elastomer lip. The two scraper lips are arranged in tandem behind one another in a compact metal housing.

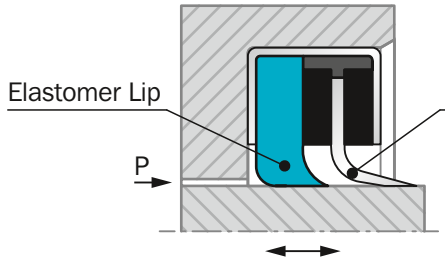

Figure 198: Metal Scraper

The metal scraper lip is designed to remove firmly adhering soiling and ice particles. The secondary lip of elastomer material enhances the overall scraping effect, i.e. fine sand grains, water and similar foreign matter are reliably scraped off. Both scraper lips have a smaller diameter than the nominal diameter of the piston rod, thus ensuring a tight fit of the scraper lips. The metallic lip is guided flexibly in radial direction and can easily follow any possible deflections of the piston rod.

ADVANTAGES

- Very good scraping effect, even with firmly adhering dirt, e.g. mud, ice
- Very abrasion resistant
- Tight fit in the groove due to the metal case
- Easy installation in open grooves

OPERATING CONDITIONS

Speed:	Max. 1 m/s with reciprocating movements
Temperature:	-30 °C to +120 °C
Media:	Mineral oil-based hydraulic fluids, flame retardant hydraulic fluids (HFA, HFB, HFC), water, air, etc.

IMPORTANT NOTE

The above data are maximum values and cannot be used at the same time, e.g. the maximum operating speed depends on material type, pressure, temperature and gap value. Temperature range also depends on media.

MATERIALS

Inner scraper lip: Acrylonitrile butadiene rubber, NBR 70 Shore A
Code N7

Metal housing: Sheet metal 1.0204 (AISI 1008) or similar
Code M

Outer scraper lip: Brass
Code S

Other materials for scraper lips and housing available on request. Also available in an imperial (inch) size range.

Installation Recommendation

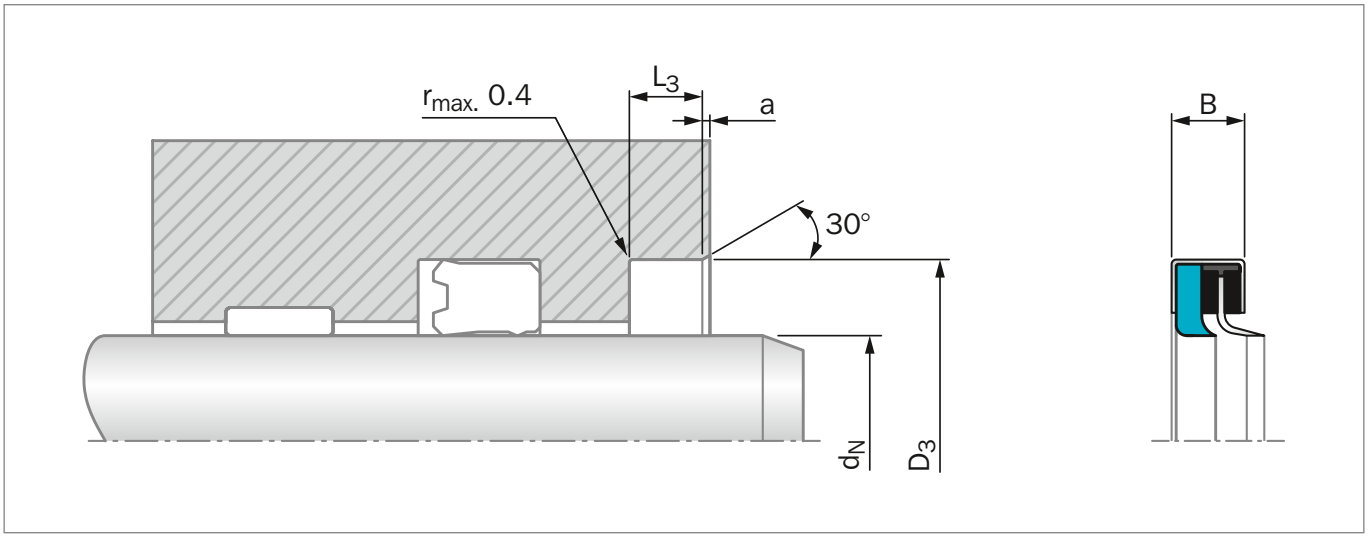

Figure 199: Installation Drawing

ORDERING EXAMPLE

Metal Scraper

Rod Diameter:	d_N = 80.00 mm
Groove Diameter:	D_3 = 96.00 mm
Groove Width:	L_3 = 8.50 mm
TSS Part No.:	WM0100800 from Table 178
Material:	Standard materials Material code N7MS

TSS Article No. **WM01 00800 - N7 M S**

- TSS Series No. — WM01
- Rod Diamter x 10 — 00800
- Quality index (Standard) — -
- Material Code (Inner Scraper Lip) — N7
- Material Code (Housing) — M
- Material Code (Outer Scraper Lip) — S

Table 178: Installation Dimensions / TSS Part Numbers

Rod Diameter	Groove Diameter	Groove Width	Chamfer	Width	TSS Part No.
d_N f8/h9	D_3 H8	L_3 +0.2	a min.	B	
12.0	**25.0**	**7.0**	**2.0**	**6.5**	**WM0000120**
14.0	**27.0**	**7.0**	**2.0**	**6.5**	**WM0000140**
15.0	28.0	7.0	2.0	6.5	WM0000150
16.0	**29.0**	**7.0**	**2.0**	**6.5**	**WM0000160**
18.0	**31.0**	**7.0**	**2.0**	**6.5**	**WM0000180**
20.0	**33.0**	**7.0**	**2.0**	**6.5**	**WM0000200**
22.0	**35.0**	**7.0**	**2.0**	**6.5**	**WM0000220**
25.0	**38.0**	**7.0**	**2.0**	**6.5**	**WM0000250**
28.0	**41.0**	**7.0**	**2.0**	**6.5**	**WM0000280**
30.0	43.0	7.5	2.0	7.0	WM0000300
32.0	**45.0**	**7.5**	**2.0**	**7.0**	**WM0000320**
35.0	48.0	7.5	2.0	7.0	WM0000350
36.0	**49.0**	**7.5**	**2.0**	**7.0**	**WM0000360**
38.0	51.0	7.5	2.0	7.0	WM0000380
40.0	**53.0**	**7.5**	**2.0**	**7.0**	**WM0200400**
45.0	**58.0**	**7.5**	**2.0**	**7.0**	**WM0000450**
50.0	**64.0**	**8.0**	**2.0**	**7.5**	**WM0000500**
55.0	69.0	8.0	2.0	7.5	WM0000550
58.0	72.0	8.0	2.0	7.5	WM0000580
60.0	74.0	8.0	2.0	7.5	WM0000600
63.0	**77.0**	**8.0**	**2.0**	**7.5**	**WM0000630**
65.0	79.0	8.0	2.0	7.5	WM0000650
70.0	**84.0**	**8.0**	**2.0**	**7.5**	**WM0000700**
75.0	89.0	8.0	2.0	7.5	WM0000750
80.0	**96.0**	**8.5**	**2.0**	**8.0**	**WM0100800**
85.0	101.0	8.5	2.0	8.0	WM0000850
90.0	**106.0**	**8.5**	**2.0**	**8.0**	**WM0000900**
95.0	111.0	8.5	2.0	8.0	WM0000950
100.0	**120.0**	**9.0**	**3.0**	**8.5**	**WM0001000**
110.0	**130.0**	**9.0**	**3.0**	**8.5**	**WM0001100**
120.0	140.0	9.0	3.0	8.5	WM0001200
130.0	150.0	9.0	3.0	8.5	WM0001300
140.0	**160.0**	**9.0**	**3.0**	**8.5**	**WM0001400**
150.0	170.0	9.0	3.0	8.5	WM0101500
160.0	**180.0**	**9.0**	**3.0**	**8.5**	**WM0001600**
170.0	190.0	9.0	3.0	8.5	WM0001700
180.0	**200.0**	**12.0**	**3.0**	**10.0**	**WM0001800**
200.0	**230.0**	**12.0**	**3.0**	**10.0**	**WM0102000**
210.0	230.0	12.0	3.0	10.0	WM0002100
220.0	**250.0**	**12.0**	**3.0**	**10.0**	**WM0002200**

The rod diameters in **bold** type comply with the recommendations of ISO 3320.
Other sizes on request.
Inch sizes can be supplied.

Turcon® Variseal® M2S

Single-acting

Spring-energized plastic U-Cup

Material:
Turcon® and Zurcon®

Turcon® Variseal® M2S

■ Description

Turcon® Variseal® M2S is a single-acting seal consisting of a U-shaped jacket and a V-shaped corrosion resistant spring. Variseal® M2S has an asymmetric seal profile. The dynamic lip is optimized, offering long service life and a good scraping ability even in media with high viscosity.

Unlike other scrapers the Variseal® M2S offers a functional combination of scraper and seal in one.

The spring cavity can be filled with high temperature HiClean silicone to prevent contamination blocking the cavity.

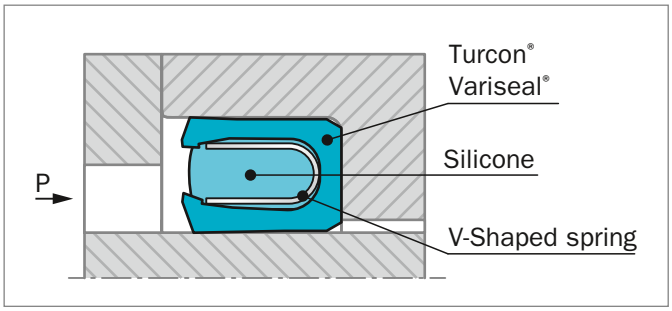

Figure 200: Turcon® Variseal® M2S

AREAS OF APPLICATION

- Marine environments, able to scrape marine growth
- Subsea environments with high temperature application
- High speed hydraulics in dirty environments
- High temperature applications
- Low temperature and cryogenic applications
- Chemical plant where the lack of any elastomer is a benefit
- Food & Pharmaceutical application where the HiClean version has minimal entrapment areas and is resistant to many CIP/SIP fluids

ADVANTAGES

- Suitable for reciprocating and light duty rotary movement
- Excellent scraping ability
- Combined scraping and sealing function
- High abrasion resistance
- Turcon has resistance to most fluids and chemicals
- Excellent resistance to aging
- Available for diameters from 3 to 3200 mm
- Dimensionally stable
- Outstanding sliding and stick-slip properties

OPERATING CONDITIONS

Pressure:	Maximum dynamic load: 20 MPa Maximum static load: 40 MPa (207 MPa with customs designs)	
Speed:	Reciprocating	up to 15 m/s in T40 up to 2 m/s in Z80
	Rotating	up to 1.27 m/s in T40
Temperature:	-50 °C to +260 °C in T40 -45 °C to +260 °C in T40 with HiClean -50 °C to +80 °C in Z80 -196 °C custom design option available	
Media:	Fluids of medium to high viscosity or containing hard particles	

IMPORTANT NOTE

The above data are maximum values and cannot be used at the same time. e.g. the maximum operating speed depends on material type, pressure, temperature and gap value. Temperature range also depends on media.

MATERIALS

All materials used are physiologically safe. They contain no odour or taste-affecting substances.

The following material combination has proved effective for most fluid applications:

Seal ring: Turcon® T40

Spring: Stainless steel, Material No. AISI 301
Material code S

For gas applications use:

Seal ring: Zurcon® Z80

For use in accordance with the demands of the Food and Drug Administration, suitable materials are available on request.

Table 179: Turcon® and Zurcon® Materials for Variseal® M2

Material Code Material Description	Operating Temperature* °C	Mating Surface Material	MPa max.
Turcon® T40 High-grade formulation of virgin polytetrafluoroethylene (PTFE) based material compounded with carbon fiber additive. Excellent wear and low friction characteristics. Suited to reciprocating and rotary applications. Suitable for use in media with poor lubricating properties and for dry-running situations. Color: Black / gray	-60 to +300	Steel, hardened Steel, chromeplated	40
Zurcon® Z80 UHMW Polyethylene. Excellent wear and abrasion resistance. Very good lubricity in water based media. Color: Translucent white	-253 to +93	Steel Steel, chromeplated Stainless steel Aluminum Bronze Ceramic coating	40

SPRING MATERIALS

The standard spring material for Turcon® Variseal® is stainless steel (spring code S). Two further materials are available for the specific applications, as detailed in the table below.

Table 180: Spring Material

Media	Spring Materials	Spring Order Code
For General use e.g. Oil Grease Air Water, steam Solvents Food, drugs Gas	**Stainless steel** DIN Mat No. 1.4310/1.4319 AISI 301/302 UNS 30100	S (Standard spring material)
For use in corrosive media e.g. Acids Caustics Seawater	**Hastelloy® C-276** DIN Mat No. 2.4819 UNS N10276	H
For petrochemical use e.g. Crude oil Sour gas	**Elgiloy® 1)** DIN Mat No. 2.4711 UNSR30003	E

Hastelloy® is a registered trademark of Haynes International, Inc.
Elgiloy® is a registered trademark of the Elgiloy Specialty Metals.
Alternative brand may be used.
1) NACE-approval

Groove Design

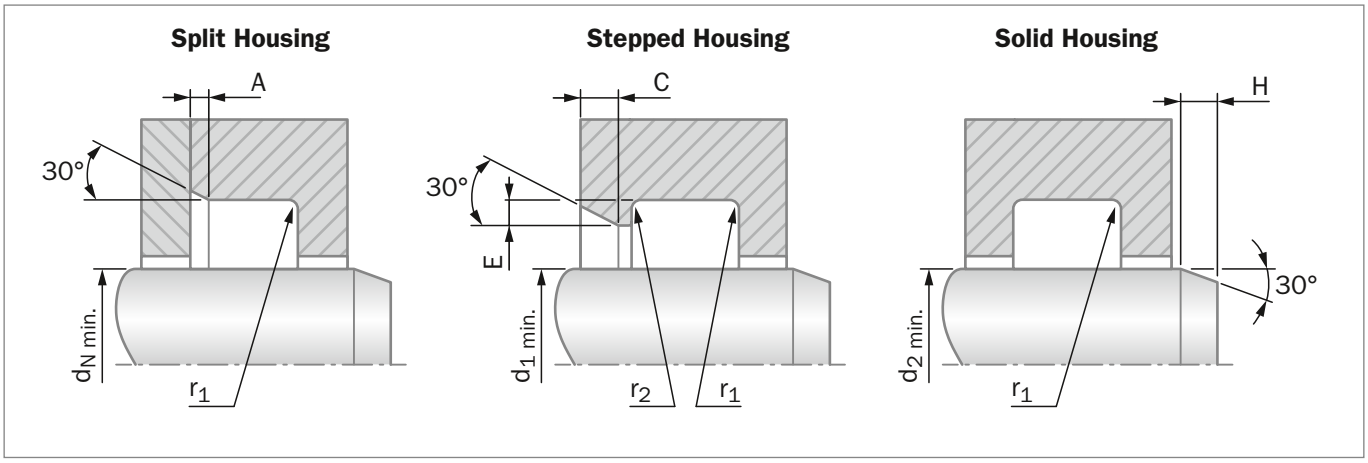

Figure 201: Variseal Groove Configurations

Installation lead-in chamfers and steps to include blend radii and are to be polished.

Table 181: Dimensions for Groove Designs

Series	Rod Groove Dimensions					
	A Chamfer	r_1 Maximum Radius	C Minimum Chamfer	r_2 Maximum Radius	E Minimum Step Height	H Minimum Chamfer
000	0.25 / 0.38	0.25	0.70	0.13	0.40	1.20
100	0.38 / 0.51	0.38	1.10	0.13	0.60	1.50
200	0.38 / 0.51	0.38	1.25	0.18	0.70	2.50
300	0.51 / 0.69	0.38	1.40	0.25	0.80	4.50
400	0.51 / 0.69	0.51	1.60	0.25	0.90	6.00
500	0.76 / 1.02	0.51	2.60	0.38	1.50	11.00

Table 182: Groove Design for Rod

Series	Rod Diameter Recommendations		
	Split Groove Ø d_N Minimum	Stepped Groove Ø d_1 Minimum	Solid Groove Ø d_2 Minimum
000	3.00	20.00	31.75
100	6.00	30.00	69.85
200	10.00	35.00	111.13
300	20.00	40.00	298.45
400	35.00	45.00	495.30
500	80.00	80.00	762.00

Installation Recommendation

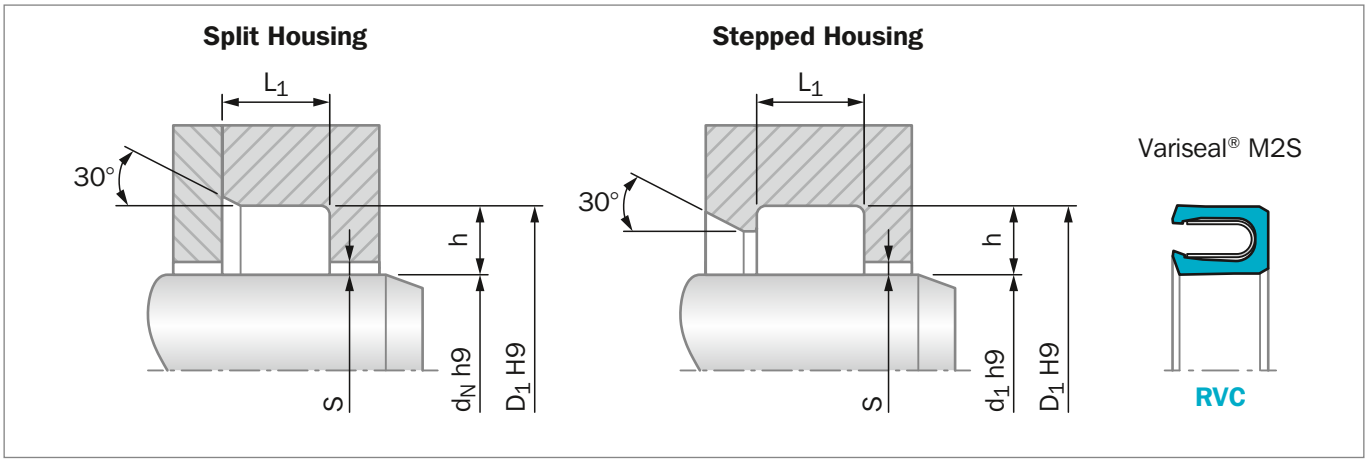

Figure 202: Installation Drawing

Table 183: Installation Dimensions

Series No.	Rod Diameter d_N / d_1 H9		Groove Depth	Groove Diameter	Groove Width	Radial Clearance $S_{max.}$*			
	Standard Range	Extended Range	h	D_1 H9	L_1 +0.2	2 MPa	10 MPa	20 MPa	40 MPa
RVC0	3 - 9.9	3 - 40	1.45	d_N / d_1 + 2.9	2.4	0.20	0.10	0.08	0.05
RVC1	10 - 19.9	6 - 200	2.25	d_N / d_1 + 4.5	3.6	0.25	0.15	0.10	0.07
RVC2	20 - 39.9	10 - 400	3.10	d_N / d_1 + 6.2	4.8	0.35	0.20	0.15	0.08
RVC3	40 - 119.9	20 - 700	4.70	d_N / d_1 + 9.4	7.1	0.50	0.25	0.20	0.10
RVC4	120 - 999.9	35 - 1600	6.10	d_N / d_1+ 12.2	9.5	0.60	0.30	0.25	0.12
RVC5	1000 - 2500	80 - 2500	9.50	d_N / d_1 + 19.0	15.0	0.90	0.50	0.40	0.20

ORDERING EXAMPLE

Turcon® Variseal® M2S, recommended range:

Series:	RVC3 from Table 183
Rod Diameter:	D_N = 80.0 mm
TSS Part No.:	RVC300800 from Table 184

For other seal and spring materials please contact the Trelleborg Sealing Solutions representative.

TSS Article No. RVC3 0 0800 - T40 S M

- TSS Series No.
- Type (Standard)
- Rod Diameter x 10**
- Quality Index (Standard)
- Material Code (Seal Ring)
- Material Code (Spring)
- Spring Load Medium

** For diameters ≥ 1000.0 mm multiply only by factor 1.
Example: RVC5 for diameter 1200.0 mm
TSS Article No.: RVC5**X1200** - T40SM

Table 184: Installation Dimensions / TSS Part No

d_N	D_1	TSS Part No.
3.0	**5.9**	**RVC0_0030**
4.0	**6.9**	**RVC0_0040**
5.0	**7.9**	**RVC0_0050**
6.0	**8.9**	**RVC0_0060**
8.0	**10.9**	**RVC0_0080**
10.0	**14.5**	**RVC1_0100**
12.0	**16.5**	**RVC1_0120**
14.0	**18.5**	**RVC1_0140**
15.0	**19.5**	**RVC1_0150**
16.0	**20.5**	**RVC1_0160**
18.0	**22.5**	**RVC1_0180**
20.0	**26.2**	**RVC2_0200**
22.0	**28.2**	**RVC2_0220**
25.0	**31.2**	**RVC2_0250**
28.0	**34.2**	**RVC2_0280**
30.0	36.2	RVC2_0300
32.0	**38.2**	**RVC2_0320**

d_N	D_1	TSS Part No.
35.0	41.2	RVC2_0350
36.0	**42.2**	**RVC2_0360**
40.0	**49.4**	**RVC3_0400**
42.0	51.4	RVC3_0420
45.0	**54.4**	**RVC3_0450**
48.0	57.4	RVC3_0480
50.0	**59.4**	**RVC3_0500**
52.0	61.4	RVC3_0520
55.0	64.4	RVC3_0550
56.0	**65.4**	**RVC3_0560**
60.0	69.4	RVC3_0600
63.0	**72.4**	**RVC3_0630**
65.0	74.4	RVC3_0650
70.0	**79.4**	**RVC3_0700**
75.0	84.4	RVC3_0750
80.0	**89.4**	**RVC3_0800**
85.0	94.4	RVC3_0850

d_N	D_1	TSS Part No.
90.0	**99.4**	**RVC3_0900**
95.0	104.4	RVC3_0950
100.0	**109.4**	**RVC3_1000**
105.0	114.4	RVC3_1050
110.0	**119.4**	**RVC3_1100**
115.0	124.4	RVC3_1150
120.0	132.2	RVC4_1200
125.0	**137.2**	**RVC4_1250**
130.0	142.2	RVC4_1300
135.0	147.2	RVC4_1350
140.0	**152.2**	**RVC4_1400**

Rod diameters in **bold** type correspond to the recommendations of ISO 3320.

For additional size and part number details please contact your local Trelleborg Sealing Solutions Marketing company.

Additonal Scrapers

Available upon Request

Old Series

Special Series

POLYPAC® UWR/PC

The UWR/PC is double-acting polyurethane wiper with integrated metal reinforcement for open groove assembly. The double lip guarantees a reliable scraper effect in one side and the sealing function of the oil film on the other.

Diameter Range mm	Pressure Range MPa	Temperature Range °C	Velocity m/s
35 - 150	-	-35 to +100	Up to 0.5

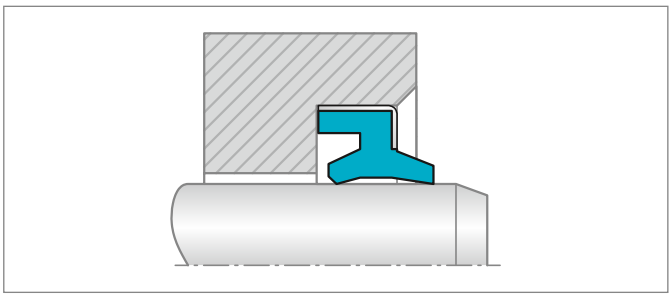

TURCON® EXCLUDER® G

A double-acting scraper with two different scraper lips which are positioned back-to-back. The scraper is installed with two O-Rings as elastic energizing elements. It is used in medium to heavy-duty applications where a gap between the rod and the gland in front of the Excluder® is not wanted.
Standard TSS Part Numbers are available (WEG).

Diameter Range mm	Pressure Range MPa	Temperature Range °C	Velocity m/s
100 - 999	-	-45 to +200	Up to 5

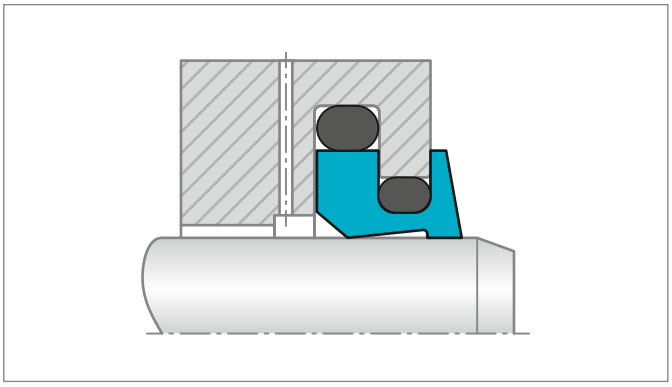

Slydring® Wear Rings

Contents

568	Choice of Slydring®
571	Design Instructions
573	Turcite® Slydring® for Piston and Rod
576	Zurcon® Slydring® for Piston and Rod
585	HiMod® Slydring® for Piston and Rod
606	Orkot® Slydring® for Piston and Rod

Choice of Slydring®

The function of Slydring® is to guide the piston and piston rod of a hydraulic cylinder by absorbing transverse forces between the sliding parts and preventing metallic contact. Non-metallic guide rings offer major benefits compared with traditional metallic guides:

- High load bearing capacity
- Eliminates local stress concentrations
- Wear-resistant, long service life
- Metal/plastic pairing eliminates fretting and seizure
- Low friction
- Damping of vibrations
- Good wiping effect, embedding of foreign particles possible
- Protection of the seal against dieseling effect
- Wide choice of material of the metal components as they are not used as guides
- Eliminates hydrodynamic pressure problems in the guide system
- Simple closed groove, easy installation
- Low service costs

MATERIALS

In view of the different specific demands made on piston and rod guides, various Slydring® materials are available:

- Turcite® are highly wear-resistant, low friction, specially modified materials for low to medium duty with limited radial forces
- HiMod® materials with friction-reducing fillers for medium to heavy duty
- Orkot® fabric composite materials for heavy duty or high radial forces

In order to choose the most suitable Slydring® , it is first necessary to know all the required functional parameters. Table 185 is recommended for initial pre-selection of the Slydring® and the materials.

Piston and rod Slydring® are interchangeable if the difference in size is taken into consideration, e.g. piston Slydring® , diameter D_N 100 x 2.5 mm thick can be used as rod Slydring® , diameter D_N 95 x 2.5 mm thick.

TOLERANCES

Depending on the material and dimensions of the Slydring® , the thickness tolerance is in the range from +0.00/-0.08 mm except for Turcite® Slydring® Article GP41 + GR41 and GP43 + GR43 where it is +0.02/-0.03 mm.

Contact your local Trelleborg Sealing Solutions marketing company for further information on specific applications and technical questions.

Table 185: Selection Criteria for Slydring®

Slydring®		Application					Standard*	Installation	Material
		Field of Application							
Type	Page		Light	Medium	Heavy	Mating Surface	ISO	Size Range mm	Recom-mended Slydring® Material
Turcite® Zurcon® Slydring®	573	Mobile hydraulics	•			Steel Steel, hardchromed Steel hardened Cast iron	ISO 10766	Off-the-roll up to diameter 4200	T47
		Standard cylinders	•	•					
		Machine tools	•	•					
		Valves	•	•		Mild steel Steel Stainless steel Aluminum			T51
		Rotary manifolds	•	•					
		Gas equipment	•	•					
		Pneumatics	•	–					
		Wind Power	•	•		Mild steel Steel, hardchromed Cast iron Stainless steel Aluminum			M12
		Off-road vehicles	•	•					
		Injection molding machines	•	•					
		Automotive industry	•	•					
		Foodstuff industry	•	•		Steel Mild steel Steel, hardchromed Stainless steel Aluminum, Ceramic coating	ISO 10766	Off-the-roll up to diameter 4200	Z80/Z81 UHMWPE
		Water hydraulics	•	•					
		Dry application	•	•					
		Pneumatics	•	•					
HiMod® Slydring®	585	Mobile hydraulics	•	•		Steel Steel, hardchromed Cast iron	ISO 10766	Rings up to diameter 300	HM061 POM/ Glass fiber
		Standard cylinders	•	•					
		Agricultural machinery	•	•					
		Mobile hydraulics	•	•	•	Steel Steel, hardchromed Cast iron			HM062 PA/ Glass fiber + PTFE
		Standard cylinders	•	•					
		Agricultural machinery	•	•					
Orkot® Slydring®	606	Mobile hydraulics	•	•	•	Steel Steel, hardchromed Cast iron Ceramic coatings Stainless steel	ISO 10766	Rings up to diameter 1600/off-the roll diameter > 10000	C320 Polymer/fabric
		Standard cylinders	•	•	•				
		Presses	•	•	•				
		Mobile hydraulics	•	•	•				C380 C480 Polymer/fabric
		Standard cylinders	•	•	•				
		Water hydraulics	•	•	•				
		Shipping and marine engineering	•	•	•				
		Presses	•	•	•				
		Mobile hydraulics	•	•	•			Rings up to diameter 500	C932 Phenolic/ cotton
		Standard cylinders	•	•	•				
		Presses	•	•	•				

* For Slydring® to other standards, e.g. to French standard NF E 48-037, please contact your local Trelleborg Sealing Solutions Marketing Company.

FORMS OF SUPPLY

Two characteristics must be observed:

1. Type of Cut
Figure 203 shows the commonly used angle cut. Rings with other types of cut are available on request. Design Code are shown in Table 187.

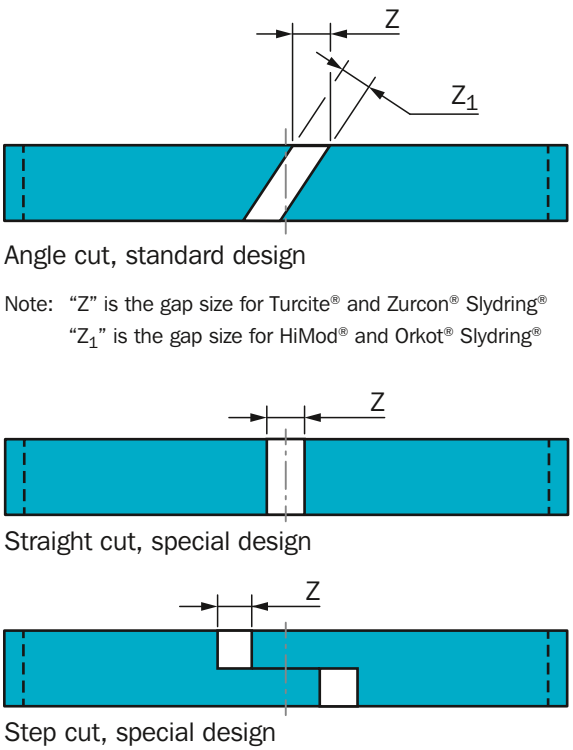

Figure 203: Type of cut

2. Design Type
Slydring® has a rectangular cross-section with rounded or chamfered edges, thus preventing edge forces from becoming too high in the corner radii of the grooves. Chamfers also facilitate installation.

Slydring® is supplied with the gap necessary (dimension Z or Z_1). The ring ends are finished as standard with an angle cut.

Depending on material, Slydring® is supplied as split rings or as strip material.

Strip material is available in rolls or precut to size as listed in Table 186.

Table 186: Forms of Supply for Slydring®

Material	Ring Diameter mm	Cut Strip for Diameter mm	Off-the-Roll
Turcite® T47/T51/M12	-	8 - 4200	see Table 188
Zurcon® Z80/Z81	on request	30 - 4200	on request
HiMod® HM061	up to 300	-	-
HiMod® HM062	up to 300	-	-
Orkot® C380/ C480/C320	16 - 1600	300 - > 10000	see page 610
Orkot® C932	16 - 500	-	-

Table 187: Design Codes for Cut

Material	Turcite®		Zurcon®	HiMod®	Orkot®	
	T47 T51 M12		Z80	HM061 HM062	C380 C480 C320 C932	C380 C480 C320
Code for cut	Strip with teardrop structure*	Strip without teardrop structure	Strip without teardrop structure	Ring without teardrop structure	Ring without teardrop structure	Strip without teardrop structure
Angle cut	**0**	L	**0**	**0**	**0**	A
Straight cut	B	D	D	**D****	H	D
Step cut	C	E	E	-	-	E

Design Code **0**, in bold types are the standard Slydring® versions. Teardrop structure: Detailed description can be found on page 573.
* Standard for **Turcite®** Slydring®
** HiMod® Wear Rings for non ISO groove dimensions have as standard a straight cut Code D.

Design Instructions

CALCULATING BEARING LENGTH

A rough estimate of the number and width of the bearings required within an application can be calculated from the formula below:

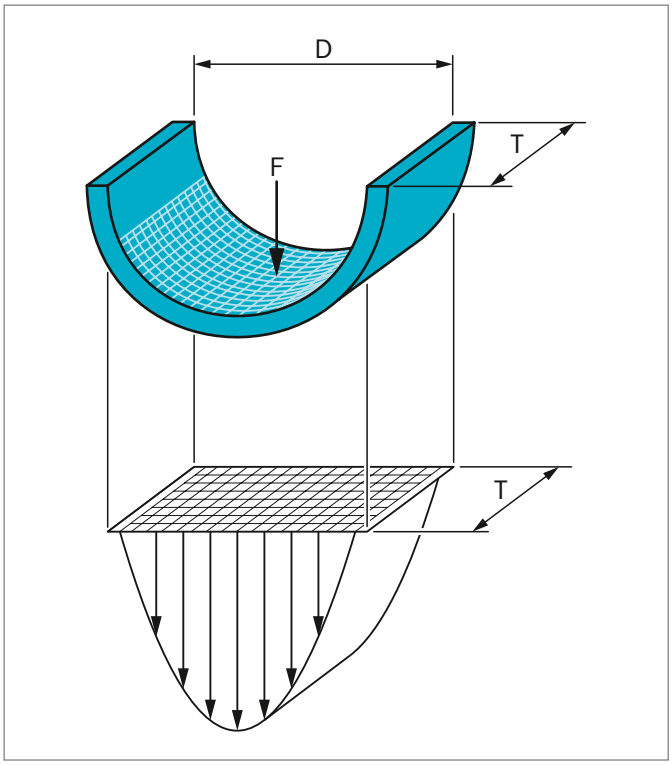

Figure 204: Load distribution

The large effective bearing area of non-metallic Slydring® provides low maximum contact pressure.

Radial forces can vary within wide ranges and cannot always be predicted. A safety factor of at least 2 is recommended when calculating:

$$T_{min} = \frac{F \times f}{D \times Pr}$$

where:

F	=	Maximum radial load [N]
f	=	Safety factor
d_N / D_N	=	Rod / Bore diameter [mm]
Pr	=	Radial Slydring® pressure [N/mm^2]
T_{min}	=	Minimum Slydring® width [mm]

Example:

d_N	=	60 mm
F	=	40.000 N
t	=	+40 °C
f	=	2

Slydring® material Orkot® C 380 - see page 610.

Pr = 100 N/mm^2

$$T_{min} = \frac{40.000 \times 2}{60 \times 100} = 13.3 \text{ mm}$$

From Table 188, a groove with a width of 15 mm Series GR73 or 2 grooves with widths of 9.7 mm Series GR69 mm are selected. The installation of two strips is recommended as this gives a longer guide length.

Selected:
2 strips Series GR69 with groove width L_2 = 9.7 mm, standard installation – see Figure 206.

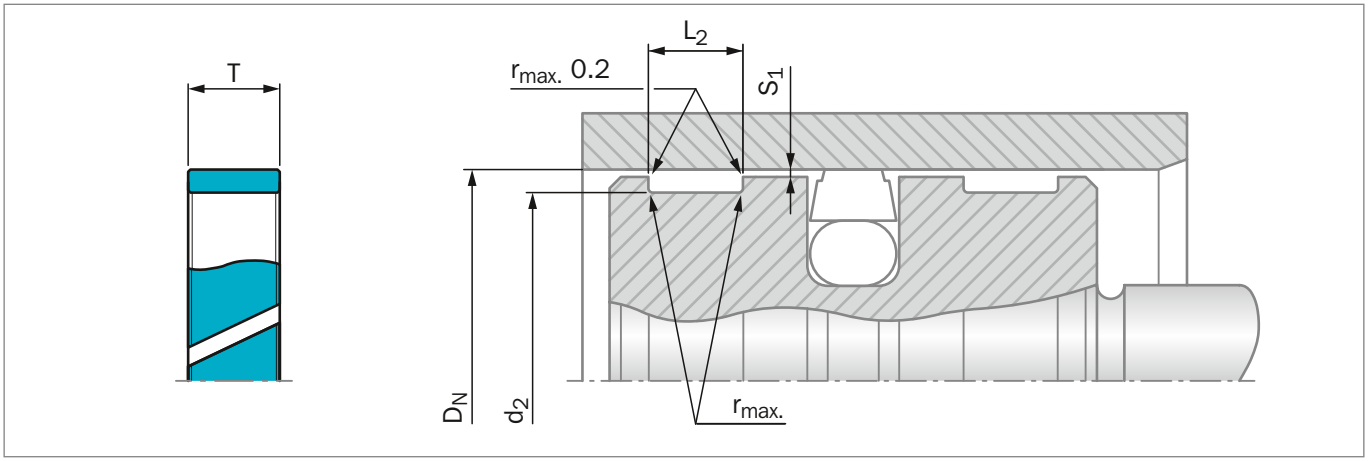

Figure 205: Piston guide

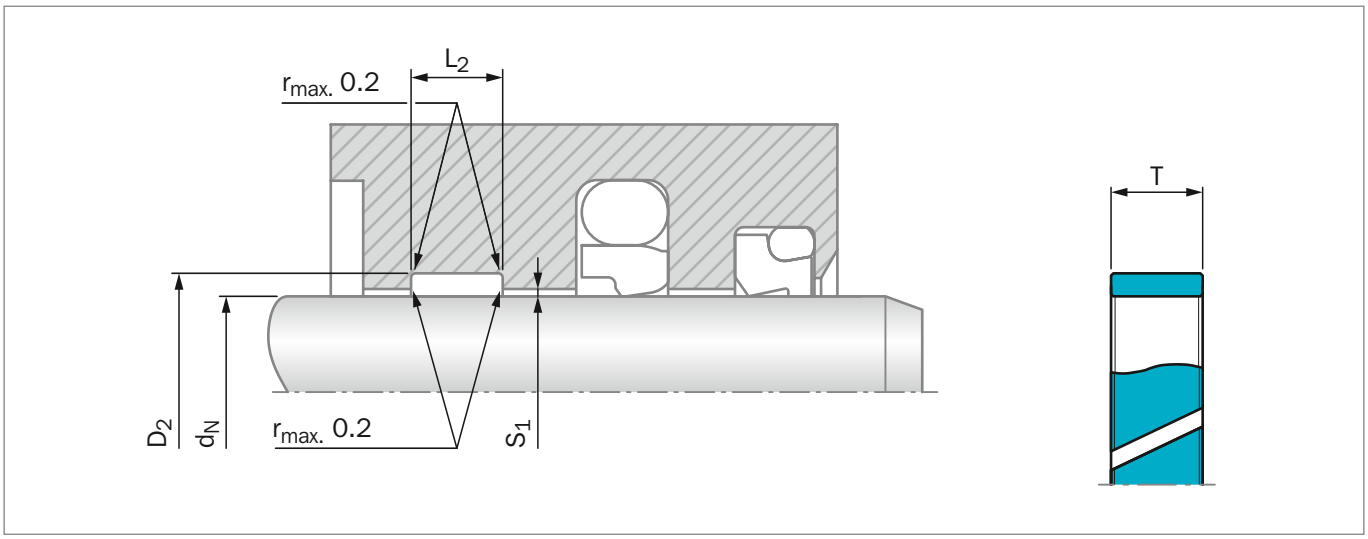

Figure 206: Rod guide

To improve the operational safety, particularly under high loads, the installation of a 3rd strip in material Turcite® M12 or T47 is recommended. It is installed on the oil side and serves, for example, as an internal scraper.

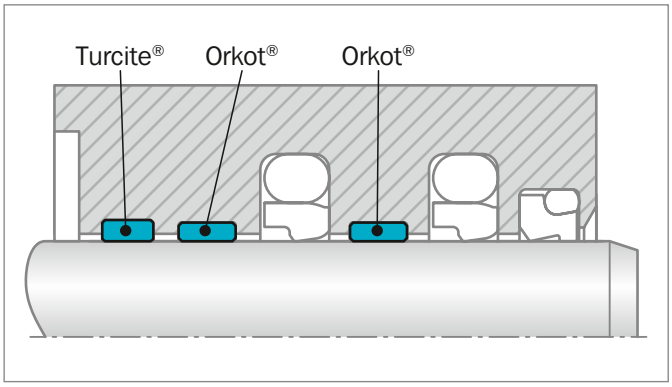

Figure 207: Rod guide for high loads (See also Figure 217 page 608)

Turcite® Slydring® for Rod and Piston

DESCRIPTION

Turcite® Slydring® is used as piston and rod guides due to the outstanding friction behavior, stick-slip free running and good resistance to high temperatures and chemicals.

Slydring® is available off-the-roll cut to length. Sections cut to size ready for installation are available for rod and piston diameters according to Table 186.

Slydring® has a geometrically rectangular cross-section and is chamfered for easy installation into the grooves.

TEARDROP STRUCTURE

Slydring® up to and including 4 mm radial thickness in Turcite® materials are as standard supplied with "teardrop" structure on the sliding surfaces. This structure comprises small lubricant pockets on the surface which improve the initial lubrication and promote the formation of a lubricant film. They also help to protect the seal system through their ability to embed any foreign particles. In order to be able to use the strip material for both piston and rod guides, the rings have the same teardrop structure on both sides.

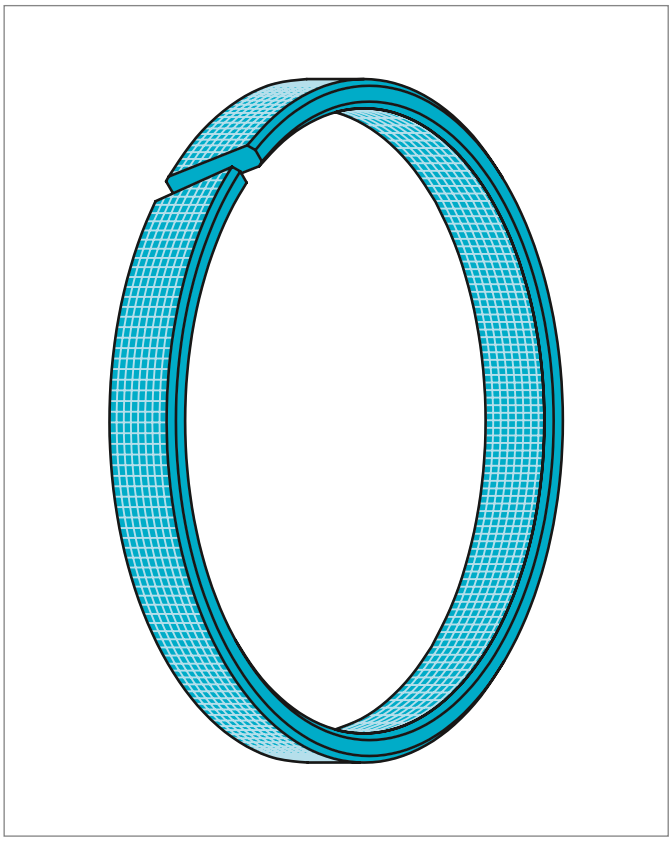

Figure 208: Turcite® Slydring® with teardrop structure structure and chamfered profile

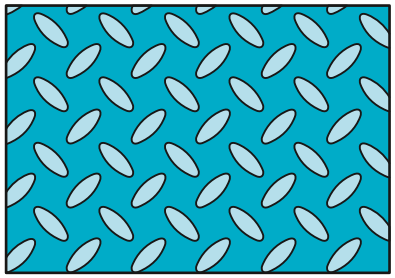

Figure 209: Teardrop structure for Turcite® Slydring®

Slydring® can also be delivered without teardrop structure. In this case, this must be indicated in the TSS Article No. (see Design Code for cut/type in Table 187).

ADVANTAGES

- No stick-slip effect when starting for smooth operation even at very low speeds
- Minimum static and dynamic friction coefficient for low operating temperature and energy loss
- Outstanding lubrication conditions further improved by the Teardrop structure
- Suitable for non-lubricating fluids depending on Turcite® material for optimum design flexibility
- High wear resistance ensures long service life
- Installation grooves according to ISO 10766
- Suitable for most hydraulic fluids in relation with the majority of modern hardware materials and surface finish depending on material selected.
- Suitable for new environmentally friendly hydraulic fluids
- The embedding of foreign particles is enhanced
- Good damping effect, absorbs vibrations

APPLICATION EXAMPLES

Turcite® Slydring® can be applied in demanding applications as a standard guiding element for hydraulic operated pistons, plus for piston rods with special requirements, in:

- Machine tools
- Injection molding machines
- Press brakes
- Presses
- Robotics and handling machinery
- Automation
- Positioning cylinders
- Servo hydraulics
- Piston accumulators
- Shock absorbers
- Valves for hydraulic and pneumatic circuits
- Agriculture
- Chemical and process industry

OPERATING CONDITIONS

Turcite® Slydring® with angle cut is recommended for linear movements:

Speed:	Up to 15 m/s
Temperature:	-60 °C to +150 °C (+200 °C)
Media:	Mineral oil-based hydraulic fluids, flame retardant hydraulic fluids, environmentally friendly hydraulic fluids (bio-oils), phosphate ester, water, air and others, depending on the Turcite® material compatibility.
Clearance:	The maximum permissible radial clearance S_{max} depends on the actual sealing system.
Tolerance:	Depending on the material and dimensions of Slydring® , the thickness tolerance is in the range from +0.00/-0.08 mm except for Turcite® Slydring® Article GP41 + GR41 and GP43 + GR43 where it is +0.02/ -0.03 mm.
Radial Slydring® Pressure:	Max. 15 N/mm^2 at +25 °C Max. 12 N/mm^2 at +80 °C Max. 8 N/mm^2 at +120 °C

When calculating the width of Turcite® Slydring® it is recommended to use a safety factor f = 2 - see page 571.

With Turcite® materials the allowed surface pressure decreases with increasing temperatures. The load bearing ability for dynamic applications depends primarily on the operating temperature, which should therefore generally not exceed +150 °C.

IMPORTANT NOTE

The above stated limits for pressure and speed are maximum values individually. Friction heat generated by the combination of pressure and speed may cause local heat build-up. Care should be taken not to apply high values for pressure and speed at the same time.

RECOMMENDED MATERIALS

The following materials have proven effective for hydraulic applications:

Turcon® Slydring® in Turcite® M12
All round material for light to medium hydraulic applications with linear, short stroke or helical movements in mineral oils, flame retardant hydraulic fluids, bio-oils, phosphate ester and fluids having low lubricating properties.
Low friction, high resistance to wear, heat and chemicals.

Turcon® Slydring® in Turcite® T47
For light to medium hydraulic applications with linear movement in mineral oils or media with good lubricating performance.

Turcon® Slydring® in Turcite® T51
For lubricated and poorly lubricated linear and slow rotary moving hydraulic and pneumatic components.

Table 188: Serial Numbers for Turcite® Slydring® in M12, T47, T51

Piston Serial No.	Rod Serial No.	Off-the-roll Serial No.*	Groove Width L_2	Ring Thickness W
GP06	GR06	GM0600000-	6.00	1.00
GP22	GR22	GM2200000-	3.20	1.50
GP31	GR31	GM3100000-	10.00	1.50
GP41	GR41	GM4100000-	2.50	1.55
GP43	**GR43**	**GM4300000-**	**4.00**	**1.55**
GP49	GR49	GM4900000-	9.70	2.00
GP53	GR53	GM5300000-	15.00	2.00
GP64	GR64	GM6400000-	4.20	2.50
GP65	**GR65**	**GM6500000-**	**5.60**	**2.50**
GP67	GR67	GM6700000-	6.30	2.50
GP68	GR68	GM6800000-	8.10	2.50
GP69	**GR69**	**GM6900000-**	**9.70**	**2.50**
GP73	**GR73**	**GM7300000-**	**15.00**	**2.50**
GP74	GR74	GM7400000-	20.00	2.50
GP75	**GR75**	**GM7500000-**	**25.00**	**2.50**
GP76	GR76	GM7600000-	30.00	2.50
GP94	GR94	GM9400000-	20.00	3.00
GP98	**GR98**	**GM9800000-**	**25.00**	**4.00**
GP99	GR99	GM9900000-	9.70	4.00
GPN1	GRN1	GMN100000-	9.70	3.00
GPL2	GRL2	GML200000-	15.00	4.00
GPL3	GRL3	GML300000-	20.00	4.00
GPL5	GRL5	GML500000-	30.00	4.00

Further dimensions on request.

Dimensions in **bold** are suitable for installation in grooves to ISO 10766.

* Off-the-roll material can be supplied as complete rolls. Length of rolls varies depending on thickness and material, please contact your local Trelleborg Sealing Solutions marketing company.

TURCITE® FROM THE ROLL, CALCULATION OF THE LINEAR LENGTH

The linear length of Turcite® and Zurcon® Slydring® is calculated such that a gap "Z" is created at the ends of the strip after installation - Figure 205 and Figure 206, page 572. This is required for the following reasons:

- Compensation of the linear expansion of the strips due to the effects of temperature
- Avoidance of intermediate pressures and entrained pressures

When ordering strips off-the-roll for manufacturing of Turcite® and Zurcon® Slydring® in your own works, the length of the strip can be calculated using the following formulae:

Piston Slydring® :

$L = c \times (D_N - W) - k$ [mm]

Rod Slydring® :

$L = c \times (d_N + W) - k$ [mm]

where

D_N = Bore diameter [mm]

d_N = Rod diameter [mm]

W = Ring thickness [mm]

c = 3.11 material factor, valid for Turcite® and Zurcon® Materials

k = Temperature constant:
0.8 for operating temperatures up to +120 °C
2.0 only for applications > +120 °C

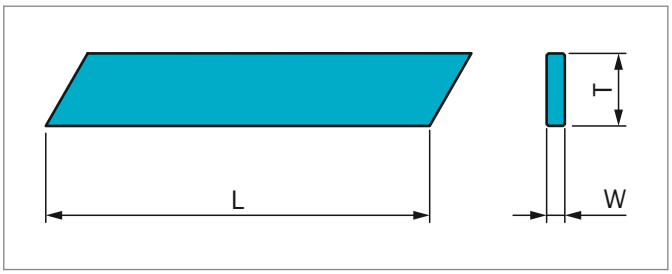

Figure 210: Cut length

Zurcon® Slydring® for Rod and Piston

ZURCON® Z80 / Z81

Z80 is a UHMW-PE (ultra-high molecular weight polyethylene) material preferred for use in water hydraulics and pneumatics due to excellent friction and wear properties. For foodstuff and medical applications, use Zurcon® Z81, which meets the requirements in FDA CFR 21, EC, 2002/72/EC and USP 26, 2003, chapter 88 Class. VI – 121 °C-, USP biological reactivity tests, in vivo.
Zurcon® Slydring® is as standard delivered without teardrop structure - see Table 187

ADVANTAGES

- Good lubrication and wear performance
- Self-lubricating
- Low friction value
- No water absorption
- In compliance with FDA (Z81)
- Excellent resistance to chemicals
- High wear resistance

APPLICATION EXAMPLES

- Water hydraulics
- Presses
- Dry pneumatics
- Filling machines
- Food processing
- Medical equipment
- Ceramic coated hydraulics

OPERATING CONDITIONS

Speed, linear:	Max. 2.0 m/s
Temperature:	-60 °C to +80 °C (+100 °C)
Media:	Mineral oil-based hydraulic fluids, flame retardant hydraulic fluids, environmentally friendly hydraulic fluids (bio-oils), phosphate ester, water, gases, dry air and others. Depending on the Zurcon® material compatibility.
Radial Slydring® Pressure:	Max. 25 N/mm^2 at +25 °C Max. 8 N/mm^2 from +60 °C to +80 °C

When calculating the width of Zurcon® Slydring® it is recommended to use a safety factor f = 2 - see page 571.

IMPORTANT NOTE

The above stated limits for pressure and speed are maximum values individually. Friction heat generated by the combination of pressure and speed may cause local heat build-up. Care should be taken not to apply high values for pressure and speed at the same time.

Table 189: Serial Numbers for Slydring® in Zurcon® Z80 / Z81

Piston Serial No.	Rod Serial No.	Off-the-roll TSS Article No.*	Groove Width L_2	Ring Thickness W
GP41	GR41	GM4100000-Z80	2.50	1.55
GP43	GR43	GM4300000-Z80	4.00	1.55
GP65	GR65	GM6500000-Z80	5.60	2.50
GP69	GR69	GM6900000-Z80	9.70	2.50
GP73	GR73	GM7300000-Z80	15.00	2.50
GP75	GR75	GM7500000-Z80	25.00	2.50
GP98	GR98	GM9800000-Z80	25.00	4.00

Further dimensions on request - see Table 188.

* Off-the-roll material can be supplied as complete rolls. Length of rolls varies depending on thickness and material, please contact your local Trelleborg Sealing Solutions marketing company.

Installation Recommendation, Turcite® and Zurcon® Slydring® for Piston According to ISO 10766 Groove Dimensions

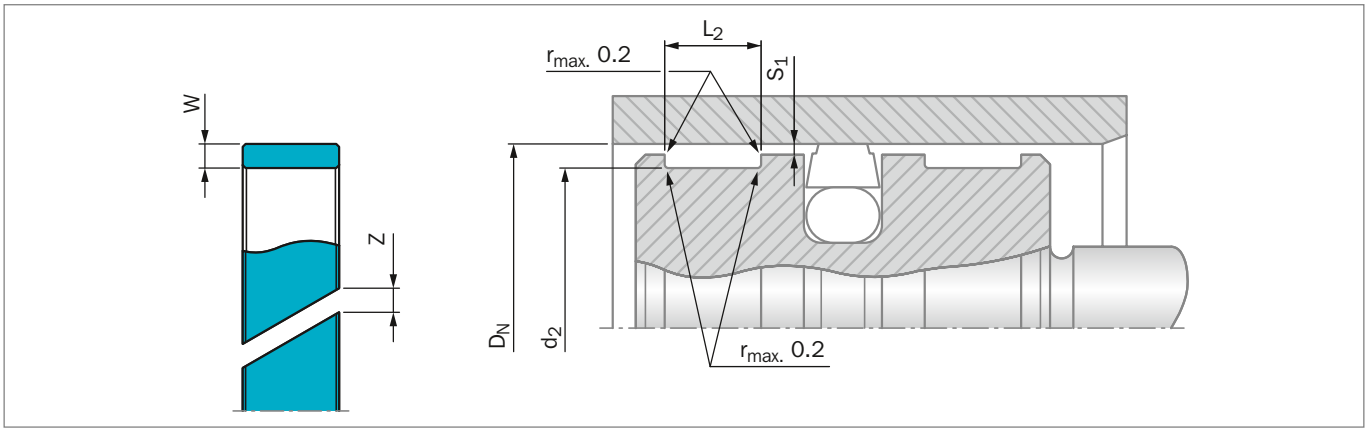

Figure 211: Installation Drawing

Table 190: Installation Dimensions

Series No.	Bore Diameter*	Groove Diameter	Groove Width	Ring Thickness	Ring Gap
	D_N H9	d_2 h8	L_2 +0.2	W	Z
GP41	8 - 20.0	D_N - 3.10	2.50	1.55	***
GP43	10 - 50.0	D_N - 3.10	4.00	1.55	***
GP65	16 - 140.0	D_N - 5.00	5.60	2.50	***
GP69	60 - 220.0	D_N - 5.00	9.70	2.50	***
GP73	130 - 400.0	D_N - 5.00	15.00	2.50	***
GP75	280 - 999.9	D_N - 5.00	25.00	2.50	***
GP75X	1000 - 4200.0	D_N - 5.00	25.00	2.50	***
GP98	280 - 999.9	D_N - 8.00	25.00	4.00	***
GP98X	1000 - 2200.0	D_N - 8.00	25.00	4.00	***
GP99**	100 - 999.9	D_N - 8.00	9.70	4.00	***

* Recommended diameter ranges ** Non ISO 10766 standard *** Calculation of the linear length, see page 575
For Slydring® to other standards, for example French standard NF E 48-037, please contact your local Trelleborg Sealing Solutions Marketing Company.

Table 191: Radial Clearance S_1****

Bore Diameter D_N	$S_{1\ min}$	$S_{1\ max}$
8 - 19	0.20	0.30
20 - 99	0.25	0.40
100 - 249	0.30	0.60
250 - 499	0.40	0.80
500 - 999	0.50	1.10
> 1000	0.60	1.20

**** Specifications valid only in the area of the Slydring® , but not for the seal area. If the radial clearance S for the chosen seals is smaller than $S_{1\ min.}$ there is risk for metal to metal contact.

Table 192: Surface Roughness

Parameter	Mating Surface µm		Groove Surface µm
	Turcite® Materials	Zurcon® Materials	
R_{max}	0.63 - 4.00	1.00 - 4.00	< 16.0
R_z	0.40 - 2.50	0.63 - 2.50	< 10.0
R_a	0.05 - 0.40	0.10 - 0.40	< 2.5

ORDERING EXAMPLE

Slydring® for bore diameter D_N = 100.0 mm
Series GP69 from Table 190

Groove Width:	9.70 mm
Ring Thickness:	2.50 mm
Material:	Turcite® M12 other materials see Table 185
Standard Design:	With angle cut and teardrop structure Design code: 0
TSS Part No.:	GP6901000 from Table 193

The TSS Article No. for all intermediate sizes can be determined by following the example:

TSS Article No. **GP69 0 1000 - M12**

TSS Series No.
Design Code (Standard)
Bore Diameter x 10
Quality Index (Standard)
Material No.

ORDERING EXAMPLE FOR $D_N \geq 1000$ MM

Slydring® for bore diameter D_N = 2700.0 mm
Series GP98X from Table 190

Groove Width:	25.00 mm
Ring Thickness:	4.00 mm
Material:	Turcite® T47 other materials see Table 185
TSS Part No.:	GP98X2700 from Table 193

The TSS Article No. for all intermediate sizes can be determined by following the example:

TSS Article No. **GP98 X 2700 - T47**

TSS Series No.
Design Code
Bore Diameter x 1*
Quality Index (Standard)
Material No.

* For diameters $D_N \geq 1000$ mm multiply only by factor 1.

Table 193: Slydring® for Piston

Dimensions				TSS Part No.
Bore Diameter	Groove Diameter	Groove Width	Thick-ness	
D_N H9	d_2 h8	L_2 +0.2	W	
8.0	4.9	2.5	1.55	GP4100080
10.0	6.9	2.5	1.55	GP4100100
10.0	6.9	4.0	1.55	GP4300100
12.0	8.9	4.0	1.55	GP4300120
14.0	10.9	4.0	1.55	GP4300140
15.0	11.9	4.0	1.55	GP4300150
16.0	**12.9**	**4.0**	**1.55**	**GP4300160**
16.0	**11.0**	**5.6**	**2.50**	**GP6500160**
18.0	14.9	4.0	1.55	GP4300180
18.0	13.0	5.6	2.50	GP6500180
20.0	**16.9**	**4.0**	**1.55**	**GP4300200**
20.0	**15.0**	**5.6**	**2.50**	**GP6500200**
22.0	17.0	5.6	2.50	GP6500220
25.0	**21.9**	**4.0**	**1.55**	**GP4300250**
25.0	**20.0**	**5.6**	**2.50**	**GP6500250**
25.0	20.0	9.7	2.50	GP6900250
27.0	22.0	5.6	2.50	GP6500270
27.0	22.0	9.7	2.50	GP6900270
28.0	23.0	5.6	2.50	GP6500280
30.0	26.9	4.0	1.55	GP4300300
30.0	25.0	5.6	2.50	GP6500300
30.0	25.0	9.7	2.50	GP6900300
32.0	**28.9**	**4.0**	**1.55**	**GP4300320**
32.0	**27.0**	**5.6**	**2.50**	**GP6500320**
32.0	27.0	9.7	2.50	GP6900320
33.0	28.0	5.6	2.50	GP6500330
35.0	30.0	5.6	2.50	GP6500350
35.0	30.0	9.7	2.50	GP6900350
36.0	31.9	4.0	1.55	GP4300360
37.0	32.0	5.6	2.50	GP6500370
37.0	32.0	9.7	2.50	GP6900370
40.0	**36.9**	**4.0**	**1.55**	**GP4300400**
40.0	**35.0**	**5.6**	**2.50**	**GP6500400**
40.0	35.0	9.7	2.50	GP6900400
41.0	36.0	5.6	2.50	GP6500410
41.0	36.0	9.7	2.50	GP6900410
42.0	37.0	5.6	2.50	GP6500420
45.0	40.0	5.6	2.50	GP6500450
45.0	40.0	9.7	2.50	GP6900450
48.0	43.0	5.6	2.50	GP6500480

Dimensions				TSS Part No.
Bore Diameter	Groove Diameter	Groove Width	Thick-ness	
D_N H9	d_2 h8	L_2 +0.2	W	
50.0	**46.9**	**4.0**	**1.55**	**GP4300500**
50.0	**45.0**	**5.6**	**2.50**	**GP6500500**
50.0	45.0	9.7	2.50	GP6900500
52.0	47.0	5.6	2.50	GP6500520
55.0	50.0	5.6	2.50	GP6500550
55.0	50.0	9.7	2.50	GP6900550
60.0	55.0	5.6	2.50	GP6500600
60.0	55.0	9.7	2.50	GP6900600
61.0	56.0	5.6	2.50	GP6500610
62.0	56.0	9.7	2.50	GP6900610
63.0	**58.0**	**5.6**	**2.50**	**GP6500630**
63.0	**58.0**	**9.7**	**2.50**	**GP6900630**
65.0	60.0	5.6	2.50	GP6500650
65.0	60.0	9.7	2.50	GP6900650
68.0	63.0	5.6	2.50	GP6500680
68.0	63.0	9.7	2.50	GP6900680
70.0	65.0	5.6	2.50	GP6500700
70.0	65.0	9.7	2.50	GP6900700
72.0	67.0	5.6	2.50	GP6500720
75.0	70.0	5.6	2.50	GP6500750
75.0	70.0	9.7	2.50	GP6900750
80.0	**75.0**	**5.6**	**2.50**	**GP6500800**
80.0	**75.0**	**9.7**	**2.50**	**GP6900800**
85.0	80.0	5.6	2.50	GP6500850
85.0	80.0	9.7	2.50	GP6900850
90.0	85.0	5.6	2.50	GP6500900
90.0	85.0	9.7	2.50	GP6900900
95.0	90.0	5.6	2.50	GP6500950
95.0	90.0	9.7	2.50	GP6900950
100.0	**95.0**	**5.6**	**2.50**	**GP6501000**
100.0	**95.0**	**9.7**	**2.50**	**GP6901000**
105.0	100.0	5.6	2.50	GP6501050
105.0	100.0	9.7	2.50	GP6901050
110.0	105.0	9.7	2.50	GP6901100
115.0	110.0	9.7	2.50	GP6901150
120.0	115.0	9.7	2.50	GP6901200
125.0	**120.0**	**5.6**	**2.50**	**GP6501250**
125.0	**120.0**	**9.7**	**2.50**	**GP6901250**
130.0	125.0	9.7	2.50	GP6901300
130.0	125.0	15.0	2.50	GP7301300

Dimensions				TSS Part No.
Bore Diameter	Groove Diameter	Groove Width	Thick-ness	
D_N H9	d_2 h8	L_2 +0.2	W	
135.0	130.0	9.7	2.50	GP6901350
135.0	130.0	15.0	2.50	GP7301350
140.0	**135.0**	**9.7**	**2.50**	**GP6901400**
140.0	**135.0**	**15.0**	**2.50**	**GP7301400**
150.0	145.0	15.0	2.50	GP7301500
160.0	**155.0**	**9.7**	**2.50**	**GP6901600**
160.0	**155.0**	**15.0**	**2.50**	**GP7301600**
170.0	165.0	15.0	2.50	GP7301700
180.0	**175.0**	**9.7**	**2.50**	**GP6901800**
180.0	**175.0**	**15.0**	**2.50**	**GP7301800**
190.0	185.0	15.0	2.50	GP7301900
200.0	**195.0**	**9.7**	**2.50**	**GP6902000**
200.0	**195.0**	**15.0**	**2.50**	**GP7302000**
210.0	205.0	15.0	2.50	GP7302100
220.0	**215.0**	**9.7**	**2.50**	**GP6902200**
220.0	**215.0**	**15.0**	**2.50**	**GP7302200**
230.0	225.0	15.0	2.50	GP7302300
240.0	235.0	15.0	2.50	GP7302400
250.0	**245.0**	**9.7**	**2.50**	**GP6902500**
250.0	**245.0**	**15.0**	**2.50**	**GP7302500**
280.0	**275.0**	**15.0**	**2.50**	**GP7302800**
280.0	**275.0**	**25.0**	**2.50**	**GP7502800**

Dimensions				TSS Part No.
Bore Diameter	Groove Diameter	Groove Width	Thick-ness	
D_N H9	d_2 h8	L_2 +0.2	W	
280.0	**272.0**	**25.0**	**4.00**	**GP9802800**
300.0	295.0	15.0	2.50	GP7303000
320.0	**315.0**	**15.0**	**2.50**	**GP7303200**
320.0	**315.0**	**25.0**	**2.50**	**GP7503200**
320.0	**312.0**	**25.0**	**4.00**	**GP9803200**
350.0	345.0	25.0	2.50	GP7503500
360.0	**355.0**	**15.0**	**2.50**	**GP7303600**
360.0	**355.0**	**25.0**	**2.50**	**GP7503600**
360.0	**352.0**	**25.0**	**4.00**	**GP9803600**
400.0	**395.0**	**15.0**	**2.50**	**GP7304000**
400.0	**395.0**	**25.0**	**2.50**	**GP7504000**
400.0	**392.0**	**25.0**	**4.00**	**GP9804000**
450.0	**445.0**	**15.0**	**2.50**	**GP7304500**
450.0	**445.0**	**25.0**	**2.50**	**GP7504500**
450.0	**442.0**	**25.0**	**4.00**	**GP9804500**
500.0	**495.0**	**15.0**	**2.50**	**GP7305000**
500.0	**495.0**	**25.0**	**2.50**	**GP7505000**
500.0	**492.0**	**25.0**	**4.00**	**GP9805000**
1000.0	995.0	25.0	2.50	GP75X1000
2700.0	2695.0	25.0	2.50	GP75X2700

All sizes printed in **bold** type conform to ISO 10766 and should be preferred.
All intermediate sizes not contained in the table are available.

Installation Recommendation, Turcite® and Zurcon® Slydring® for Rod According to ISO 10766 Groove Dimension

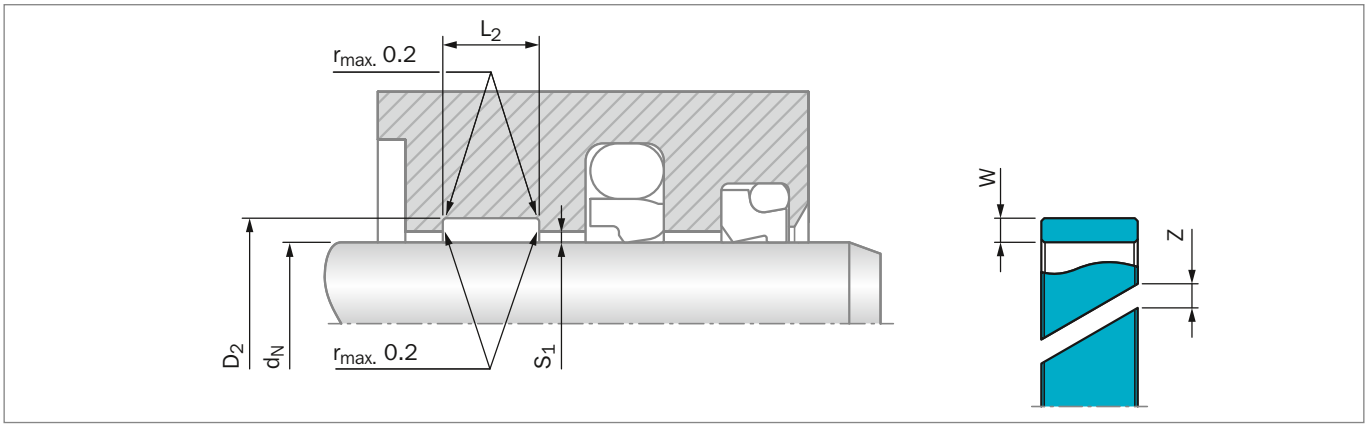

Figure 212: Installation Drawing

Table 194: Installation Dimensions

Serial No.	Rod Diameter*	Groove Diameter	Groove Width	Ring Thickness	Ring Gap
	d_N f8/h9	D_2 H8	L_2 +0.2	W	Z
GR41	8 - 20.0	d_N +3.10	2.50	1.55	**
GR43	10 - 50.0	d_N +3.10	4.00	1.55	**
GR65	15 - 140.0	d_N +5.00	5.60	2.50	**
GR69	20 - 220.0	d_N +5.00	9.70	2.50	**
GR73	80 - 400.0	d_N +5.00	15.00	2.50	**
GR75	200 - 999.9	d_N +5.00	25.00	2.50	**
GP75X	1000 - 4200.0	d_N +5.00	25.00	2.50	**
GR75X	1000 - 4200.0	d_N +5.00	25.00	2.50	**
GR98	280 - 999.9	d_N +8.00	25.00	4.00	**
GR98X	1000 - 2200.0	d_N +8.00	25.00	4.00	**

* Recommended diameter ranges ** Calculation of the linear length, see page 575
For Slydring® to other standards, for example French standard NF E 48-037, please contact your local Trelleborg Sealing Solutions Marketing Company.

Table 195: Radial Clearance S_1***

Rod Diameter d_N	$S_{1\ min}$	$S_{1\ max}$
8 - 19	0.20	0.30
20 - 99	0.25	0.40
100 - 249	0.30	0.60
250 - 499	0.40	0.80
500 - 999	0.50	1.10
> 1000	0.60	1.20

*** Specifications valid only in the area of the Slydring® , but not for the seal area. If the radial clearance S for the chosen seals is smaller than $S_{1\ min.}$ there is risk for metal to metal contact.

Table 196: Surface Roughness

Parameter	Mating Surface µm		Groove Surface µm
	Turcite® Materials	Zurcon® Materials	
R_{max}	0.63 - 4.00	1.00 - 4.00	< 16.0
R_z	0.40 - 2.50	0.63 - 2.50	< 10.0
R_a	0.05 - 0.40	0.10 - 0.40	< 2.5

ORDERING EXAMPLE

Slydring® for rod diameter d_N = 63.0 mm
Series GR65 from Table 194

Groove Width:	5.60 mm
Ring Thickness:	2.50 mm
Material:	Turcite® M12 other materials see Table 185
Standard Design:	With angle cut and teardrop structure Design code: 0
TSS Part No.:	GR6500630 from Table 197

The TSS Article No. for all intermediate sizes can be determined by following the example:

TSS Article No. GR65 0 0630 - M12

- TSS Series No. — GR65
- Design Code (Standard) — 0
- Rod Diameter x 10 — 0630
- Quality Index (Standard) — -
- Material No. — M12

ORDERING EXAMPLE FOR $D_N \geq 1000$ MM

Slydring® for rod diameter d_N = 2600.0 mm
Series GR98X from Table 194

Groove Width:	25.00 mm
Ring Thickness:	4.00 mm
Material:	Turcite® T47 other materials see Table 185
TSS Part No.:	GR98X2600 from Table 197

The TSS Article No. for all intermediate sizes can be determined by following the example:

TSS Article No. GR98 X 2600 - T47

- TSS Series No. — GR98
- Design Code — X
- Rod Diameter x 1* — 2600
- Quality Index (Standard) — -
- Material No. — T47

* For diameters $d_N \geq 1000$ mm multiply only by factor 1.

Table 197: Slydring® for Rods

Dimensions				TSS Part No.
Rod Diameter	Groove Diameter	Groove Width	Thick-ness	
d_N f8/h9	D_2 H8	L_2 +0.2	W	
8.0	11.1	2.5	1.55	GR4100080
10.0	13.1	2.5	1.55	GR4100100
10.0	13.1	4.0	1.55	GR4300100
12.0	**15.1**	**4.0**	**1.55**	**GR4300120**
14.0	**17.1**	**4.0**	**1.55**	**GR4300140**
15.0	18.1	4.0	1.55	GR4300150
16.0	**19.1**	**4.0**	**1.55**	**GR4300160**
16.0	21.0	5.6	2.50	GR6500160
18.0	**21.1**	**4.0**	**1.55**	**GR4300180**
18.0	23.0	5.6	2.50	GR6500180
20.0	**23.1**	**4.0**	**1.55**	**GR4300200**
20.0	25.0	5.6	2.50	GR6500200
20.0	25.0	9.7	2.50	GR6900200
22.0	**25.1**	**4.0**	**1.55**	**GR4300220**
22.0	27.0	5.6	2.50	GR6500220
22.0	27.0	9.7	2.50	GR6900220

Dimensions				TSS Part No.
Rod Diameter	Groove Diameter	Groove Width	Thick-ness	
d_N f8/h9	D_2 H8	L_2 +0.2	W	
25.0	**28.1**	**4.0**	**1.55**	**GR4300250**
25.0	**30.0**	**5.6**	**2.50**	**GR6500250**
25.0	30.0	9.7	2.50	GR6900250
27.0	32.0	5.6	2.50	GR6500270
27.0	32.0	9.7	2.50	GR6900270
28.0	**31.1**	**4.0**	**1.55**	**GR4300280**
28.0	**33.0**	**5.6**	**2.50**	**GR6500280**
28.0	33.0	9.7	2.50	GR6900280
30.0	35.0	5.6	2.50	GR6500300
30.0	35.0	9.7	2.50	GR6900300
32.0	**37.0**	**5.6**	**2.50**	**GR6500320**
32.0	**37.0**	**9.7**	**2.50**	**GR6900320**
35.0	40.0	5.6	2.50	GR6500350
35.0	40.0	9.7	2.50	GR6900350
36.0	**41.0**	**5.6**	**2.50**	**GR6500360**
36.0	**41.0**	**9.7**	**2.50**	**GR6900360**

Dimensions				TSS Part No.
Rod Diameter	Groove Diameter	Groove Width	Thick-ness	
d_N f8/h9	D_2 H8	L_2 +0.2	W	
40.0	**45.0**	**5.6**	**2.50**	**GR6500400**
40.0	**45.0**	**9.7**	**2.50**	**GR6900400**
40.0	45.0	15.0	2.50	GR7300400
42.0	47.0	5.6	2.50	GR6500420
43.0	48.0	5.6	2.50	GR6500430
45.0	**50.0**	**5.6**	**2.50**	**GR6500450**
45.0	**50.0**	**9.7**	**2.50**	**GR6900450**
48.0	53.0	5.6	2.50	GR6500480
48.0	53.0	9.7	2.50	GR6900480
50.0	**55.0**	**5.6**	**2.50**	**GR6500500**
50.0	**55.0**	**9.7**	**2.50**	**GR6900500**
52.0	57.0	5.6	2.50	GR6500520
52.0	57.0	9.7	2.50	GR6900520
55.0	60.0	5.6	2.50	GR6500550
55.0	60.0	9.7	2.50	GR6900550
56.0	**61.0**	**5.6**	**2.50**	**GR6500560**
56.0	**61.0**	**9.7**	**2.50**	**GR6900560**
58.0	63.0	5.6	2.50	GR6500580
58.0	63.0	9.7	2.50	GR6900580
60.0	65.0	5.6	2.50	GR6500600
60.0	65.0	9.7	2.50	GR6900600
63.0	**68.0**	**5.6**	**2.50**	**GR6500630**
63.0	**68.0**	**9.7**	**2.50**	**GR6900630**
63.0	68.0	15.0	2.50	GR7300630
65.0	70.0	5.6	2.50	GR6500650
65.0	70.0	9.7	2.50	GR6900650
70.0	**75.0**	**5.6**	**2.50**	**GR6500700**
70.0	**75.0**	**9.7**	**2.50**	**GR6900700**
70.0	75.0	15.0	2.50	GR7300700
75.0	80.0	5.6	2.50	GR6500750
75.0	80.0	9.7	2.50	GR6900750
75.0	80.0	15.0	2.50	GR7300750
80.0	85.0	5.6	2.50	GR6500800
80.0	**85.0**	**9.7**	**2.50**	**GR6900800**
80.0	**85.0**	**15.0**	**2.50**	**GR7300800**
85.0	90.0	5.6	2.50	GR6500850
85.0	90.0	9.7	2.50	GR6900850
90.0	**95.0**	**5.6**	**2.50**	**GR6500900**
90.0	**95.0**	**9.7**	**2.50**	**GR6900900**
90.0	95.0	15.0	2.50	GR7300900
95.0	100.0	9.7	2.50	GR6900950

Dimensions				TSS Part No.
Rod Diameter	Groove Diameter	Groove Width	Thick-ness	
d_N f8/h9	D_2 H8	L_2 +0.2	W	
95.0	100.0	15.0	2.50	GR7300950
100.0	105.0	5.6	2.50	GR6501000
100.0	**105.0**	**9.7**	**2.50**	**GR6901000**
100.0	**105.0**	**15.0**	**2.50**	**GR7301000**
105.0	110.0	9.7	2.50	GR6901050
105.0	110.0	15.0	2.50	GR7301050
110.0	**115.0**	**9.7**	**2.50**	**GR6901100**
110.0	**115.0**	**15.0**	**2.50**	**GR7301100**
115.0	120.0	9.7	2.50	GR6901150
115.0	120.0	15.0	2.50	GR7301150
120.0	125.0	5.6	2.50	GR6501200
120.0	125.0	9.7	2.50	GR6901200
120.0	125.0	15.0	2.50	GR7301200
125.0	**130.0**	**9.7**	**2.50**	**GR6901250**
125.0	**130.0**	**15.0**	**2.50**	**GR7301250**
130.0	135.0	15.0	2.50	GR7301300
135.0	140.0	15.0	2.50	GR7301350
140.0	**145.0**	**9.7**	**2.50**	**GR6901400**
140.0	**145.0**	**15.0**	**2.50**	**GR7301400**
150.0	155.0	15.0	2.50	GR7301500
155.0	160.0	15.0	2.50	GR7301550
160.0	**165.0**	**9.7**	**2.50**	**GR6901600**
160.0	**165.0**	**15.0**	**2.50**	**GR7301600**
170.0	175.0	15.0	2.50	GR7301700
180.0	**185.0**	**9.7**	**2.50**	**GR6901800**
180.0	**185.0**	**15.0**	**2.50**	**GR7301800**
190.0	195.0	15.0	2.50	GR7301900
195.0	200.0	15.0	2.50	GR7301950
200.0	**205.0**	**15.0**	**2.50**	**GR7302000**
200.0	**205.0**	**25.0**	**2.50**	**GR7502000**
210.0	215.0	15.0	2.50	GR7302100
220.0	**225.0**	**15.0**	**2.50**	**GR7302200**
220.0	**225.0**	**25.0**	**2.50**	**GR7502200**
230.0	235.0	25.0	2.50	GR7502300
240.0	245.0	25.0	2.50	GR7502400
250.0	**255.0**	**15.0**	**2.50**	**GR7302500**
250.0	**255.0**	**25.0**	**2.50**	**GR7502500**
280.0	**285.0**	**15.0**	**2.50**	**GR7302800**
280.0	**285.0**	**25.0**	**2.50**	**GR7502800**
280.0	**288.0**	**25.0**	**4.00**	**GR9802800**
300.0	305.0	25.0	2.50	GR7503000

Dimensions				TSS Part No.
Rod Diameter	Groove Diameter	Groove Width	Thick-ness	
d_N f8/h9	D_2 H8	L_2 +0.2	W	
320.0	**325.0**	**15.0**	**2.50**	**GR7303200**
320.0	**325.0**	**25.0**	**2.50**	**GR7503200**
320.0	**328.0**	**25.0**	**4.00**	**GR9803200**
350.0	355.0	25.0	2.50	GR7503500
360.0	**365.0**	**15.0**	**2.50**	**GR7303600**
360.0	**365.0**	**25.0**	**2.50**	**GR7503600**
360.0	**368.0**	**25.0**	**4.00**	**GR9803600**
400.0	405.0	25.0	2.50	GR7504000
400.0	408.0	25.0	4.00	GR9804000
800.0	805.0	25.0	2.50	GR7508000
800.0	808.0	25.0	4.00	GR9808000
1000.0	1005.0	25.0	2.50	GR75X1000
1000.0	1008.0	25.0	4.00	GR98X1000
2200.0	2205.0	25.0	2.50	GR75X2200
2600.0	2605.0	25.0	2.50	GR75X2600
2600.0	2608.0	25.0	4.00	GR98X2600

All sizes printed in **bold** type conform to ISO 10766 and should be preferred.
All intermediate sizes not contained in the table are available upon request.

■ HiMod® Slydring® for Piston and Rod

DESCRIPTION

HiMod® Slydring® are made in special, modified thermoplastic materials and can be used in hydraulic cylinders for medium to high loads. Two different grades of material are available:

HiMod® HM061:	A special glass fiber reinforced polyacetal
HiMod® HM062:	A special glass fiber reinforced heat-stabilized polyamid with PTFE filler

Slydring® in material HM061 and HM062 are injection molded to finish parts (mold necessary), a wide range of standard sizes (see Table 203 and Table 215) are available.

APPLICATION EXAMPLES

HiMod® Slydring® (HM061, 062) is generally utilized in a wide range of hydraulic equipment such as:

- Standard hydraulic cylinder, medium range
- Truck tail lift
- Telescopic cylinders
- Truck cranes
- Forklift truck
- Stabilizer cylinders
- Agriculture equipment
- Construction machinery

MATERIALS

HiMod® HM061
HiMod® HM061 is a polyacetal (POM) based material with glass fibers.

ADVANTAGES

- Favorable price/performance ratio
- High compressive strength
- Easy installation on pistons and glands (gland bore > 40 mm)
- High wear resistance
- Water absorption 0.2%
- High stiffness

OPERATING CONDITIONS

Velocity, reciprocating:	max. 0.8 m/s
Temperature:	-40 °C to +110 °C
Radial Slydring® Pressure:	max. 40 N/mm2 at +25 °C max. 25 N/mm2 > +60 °C

When calculating the width of HiMod® Slydring® it is recommended to use a safety factor f = 2, see page 571.

IMPORTANT NOTE

The above stated limits for pressure and speed are maximum values individually. Friction heat generated by the combination of pressure and speed may cause local heat build-up. Care should be taken not to apply high values for pressure and speed at the same time.

HiMod® HM062
HM062 is a polyamid (PA 66) based material with glass fibers and PTFE filler. The material is heat stabilized.

ADVANTAGES

- Good price/performance ratio
- High compressive strength even at high temperatures
- High wear resistance
- Easy installation on pistons and glands (gland bore > 30 mm)
- Low friction
- For operation under poor lubrication

OPERATING CONDITIONS

Velocity, reciprocating:	max. 1.0 m/s
Temperature:	-40 °C to +130 °C
Radial Slydring® Pressure:	max. 75 N/mm2 at +60 °C max. 40 N/mm2 > +60 °C

When calculating the width of HiMod® Slydring® it is recommended to use a safety factor f = 2 - see page 571.

IMPORTANT NOTE

The above stated limits for pressure and speed are maximum values individually. Friction heat generated by the combination of pressure and speed may cause local heat build-up. Care should be taken not to apply high values for pressure and speed at the same time.

Installation Recommendation, HiMod® Slydring® for Piston According to ISO 10766 Groove Dimension

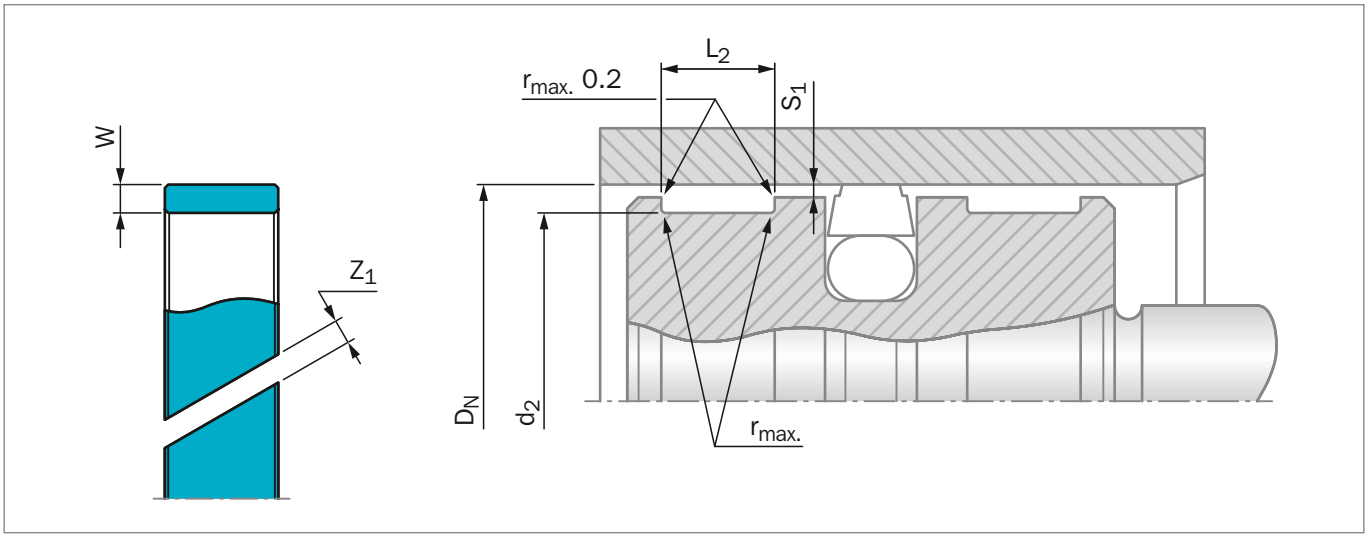

Figure 213: Installation Drawing

Table 198: Installation Dimensions

Serial No.	Bore Diameter*	Groove Diameter	Groove Width	Ring Thickness
	D_N H9	d_2 h8	L_2 +0.2	W
GP43	10 - 50.0	D_N - 3.10	4.00	1.55
GP65	16 - 140.0	D_N - 5.00	5.60	2.50
GP69	60 - 220.0	D_N - 5.00	9.70	2.50
GP73	130 - 300.0	D_N - 5.00	15.00	2.50
GP75	280 - 300.0	D_N - 5.00	25.00	2.50
GP98	280 - 300.0	D_N - 8.00	25.00	4.00

* Recommended diameter ranges.
For Slydring® to other standds, e.g. French standard NF E 48-037, please contact your local Trelleborg Sealing Solutions Marketing Company.

Table 199: Recommended Radii for Groove Diameter

D_N	r_{max}
8 - 250	0.2
> 250	0.4

Table 200: Radial Clearance S_1**

Bore Diameter D_N	$S_{1\ min}$	$S_{1\ max}$
8 - 20	0.20	0.30
20 - 100	0.25	0.40
101 - 250	0.30	0.60
251 - 300	0.40	0.80

** Specifications valid only in the area of the Slydring® , but not for the seal area.

Table 201: Recommended Gap

D_N	Ring Gap Z_1
10 - 44	2 - 2.5
45 - 149	2 -3
> 150	3 - 4

Table 202: Surface Roughness

Parameter	Mating Surface µm HiMod® Materials	Groove Surface µm
R_{max}	1.00 - 4.00	< 16.0
R_z	0.63 - 2.50	< 10.0
R_a	0.10 - 0.40	< 2.5

ORDERING EXAMPLE

Slydring® for bore diameter D_N = 100.0 mm
Series GP69 from Table 198

Groove Width:	9.70 mm
Ring Thickness:	2.50 mm
Material:	HiMod® HM061 other materials see Table 185
Standard Design:	With angle cut Design code: 0
TSS Part No.:	GP6901000-HM061 from Table 203

Note
HM062 material can be ordered by replacing the HM061 material code in the TSS Article Number.

Please check with your local Trelleborg Sealing Solutions Marketing Company the availability and price of the HM062. This material may require new molds.

TSS Article No. GP69 0 1000 - HM061

- TSS Series No. — GP69
- Design Code (Standard) — 0
- Bore Diameter x 10 — 1000
- Quality Index (Standard) — -
- Material No. — HM061

Table 203: Slydring® for Piston in HM061

Dimensions				TSS Article No.	Polypac Ref. No.
Bore Diameter	Groove Diameter	Groove Width	Thickness		
D_N H9	d_2 h8	L_2 +0.2	W		
12.0	8.9	4.0	1.55	GP4300120-HM061	WR 8.9 12 4
16.0	**12.9**	**4.0**	**1.55**	**GP4300160-HM061**	**WR 12.9 16 4**
20.0	**16.9**	**4.0**	**1.55**	**GP4300200-HM061**	**WR 16.9 20 4**
24.0	20.9	4.0	1.55	GP4300240-HM061	WR 20.9 24 4
25.0	**21.9**	**4.0**	**1.55**	**GP4300250-HM061**	**WR 21.9 25 4**
25.0	**20.0**	**5.6**	**2.50**	**GP6500250-HM061**	**WR 20 25 5.6**
25.0	20.0	9.7	2.50	GP6900250-HM061	WR 20 25 9.7
27.0	22.0	5.6	2.50	GP6500270-HM061	WR 22 27 5.6
27.0	22.0	9.7	2.50	GP6900270-HM061	WR 22 27 9.7
30.0	25.0	5.6	2.50	GP6500300-HM061	WR 25 30 5.6
30.0	25.0	9.7	2.50	GP6900300-HM061	WR 25 30 9.7
32.0	**28.9**	**4.0**	**1.55**	**GP4300320-HM061**	**WR 28.9 32 4**
32.0	**27.0**	**5.6**	**2.50**	**GP6500320-HM061**	**WR 27 32 5.6**
32.0	27.0	9.7	2.50	GP6900320-HM061	WR 27 32 9.7

Dimensions				TSS Article No.	Polypac Ref. No.
Bore Diameter	Groove Diameter	Groove Width	Thickness		
D_N H9	d_2 h8	L_2 +0.2	W		
33.0	28.0	5.6	2.50	GP6500330-HM061	WR 28 33 5.6
35.0	30.0	5.6	2.50	GP6500350-HM061	WR 30 35 5.6
35.0	30.0	9.7	2.50	GP6900350-HM061	WR 30 35 9.7
37.0	32.0	5.6	2.50	GP6500370-HM061	WR 32 37 5.6
37.0	32.0	9.7	2.50	GP6900370-HM061	WR 32 37 9.7
40.0	**35.0**	**5.6**	**2.50**	**GP6500400-HM061**	**WR 35 40 5.6**
40.0	35.0	9.7	2.50	GP6900400-HM061	WR 35 40 9.7
41.0	36.0	5.6	2.50	GP6500410-HM061	WR 36 41 5.6
41.0	36.0	9.7	2.50	GP6900410-HM061	WR 36 41 9.7
45.0	40.0	5.6	2.50	GP6500450-HM061	WR 40 45 5.6
45.0	40.0	9.7	2.50	GP6900450-HM061	WR 40 45 9.7
45.0	40.0	15.0	2.50	GP7300450-HM061	WR 40 45 15
50.0	**45.0**	**5.6**	**2.50**	**GP6500500-HM061**	**WR 45 50 5.6**
50.0	45.0	9.7	2.50	GP6900500-HM061	WR 45 50 9.7
50.0	45.0	15.0	2.50	GP7300500-HM061	WR 45 50 15
52.0	47.0	5.6	2.50	GP6500520-HM061	WR 47 52 5.6
55.0	50.0	5.6	2.50	GP6500550-HM061	WR 50 55 5.6
55.0	50.0	9.7	2.50	GP6900550-HM061	WR 50 55 9.7
55.0	50.0	15.0	2.50	GP7300550-HM061	WR 50 55 15
57.0	52.0	5.6	2.50	GP6500570-HM061	WR 52 57 5.6
57.0	52.0	9.7	2.50	GP6900570-HM061	WR 52 57 9.7
58.0	53.0	9.7	2.50	GP6900580-HM061	WR 53 58 9.7
60.0	55.0	5.6	2.50	GP6500600-HM061	WR 55 60 5.6
60.0	55.0	9.7	2.50	GP6900600-HM061	WR 55 60 9.7
61.0	56.0	5.6	2.50	GP6500610-HM061	WR 56 61 5.6
62.0	56.0	9.7	2.50	GP6900610-HM061	WR 56 61 9.7
63.0	**58.0**	**5.6**	**2.50**	**GP6500630-HM061**	**WR 58 63 5.6**
63.0	**58.0**	**9.7**	**2.50**	**GP6900630-HM061**	**WR 58 63 9.7**
65.0	60.0	5.6	2.50	GP6500650-HM061	WR 60 65 5.6
65.0	60.0	9.7	2.50	GP6900650-HM061	WR 60 65 9.7
68.0	63.0	5.6	2.50	GP6500680-HM061	WR 63 68 5.6
68.0	63.0	9.7	2.50	GP6900680-HM061	WR 63 68 9.7
68.0	63.0	15.0	2.50	GP7300680-HM061	WR 63 68 15
70.0	65.0	5.6	2.50	GP6500700-HM061	WR 65 70 5.6
70.0	65.0	9.7	2.50	GP6900700-HM061	WR 65 70 9.7
72.0	67.0	5.6	2.50	GP6500720-HM061	WR 67 72 5.6
75.0	70.0	5.6	2.50	GP6500750-HM061	WR 70 75 5.6
75.0	70.0	9.7	2.50	GP6900750-HM061	WR 70 75 9.7
75.0	70.0	15.0	2.50	GP7300750-HM061	WR 70 75 15
80.0	**75.0**	**5.6**	**2.50**	**GP6500800-HM061**	**WR 75 80 5.6**
80.0	**75.0**	**9.7**	**2.50**	**GP6900800-HM061**	**WR 75 80 9.7**

Dimensions				TSS Article No.	Polypac Ref. No.
Bore Diameter	Groove Diameter	Groove Width	Thickness		
D_N H9	d_2 h8	L_2 +0.2	W		
80.0	**75.0**	**15.0**	**2.50**	**GP7300800-HM061**	**WR 75 80 15**
85.0	80.0	5.6	2.50	GP6500850-HM061	WR 80 85 5.6
85.0	80.0	9.7	2.50	GP6900850-HM061	WR 80 85 9.7
85.0	80.0	15.0	2.50	GP7300850-HM061	WR 80 85 15
90.0	85.0	5.6	2.50	GP6500900-HM061	WR 85 90 5.6
90.0	85.0	9.7	2.50	GP6900900-HM061	WR 85 90 9.7
90.0	85.0	15.0	2.50	GP7300900-HM061	WR 85 90 15
95.0	90.0	5.6	2.50	GP6500950-HM061	WR 90 95 5.6
95.0	90.0	9.7	2.50	GP6900950-HM061	WR 90 95 9.7
100.0	**95.0**	**5.6**	**2.50**	**GP6501000-HM061**	**WR 95 100 5.6**
100.0	**95.0**	**9.7**	**2.50**	**GP6901000-HM061**	**WR 95 100 9.7**
100.0	**95.0**	**15.0**	**2.50**	**GP7301000-HM061**	**WR 95 100 15**
105.0	100.0	5.6	2.50	GP6501050-HM061	WR 100 105 5.6
105.0	100.0	9.7	2.50	GP6901050-HM061	WR 100 105 9.7
105.0	100.0	15.0	2.50	GP7301050-HM061	WR 100 105 15
110.0	105.0	9.7	2.50	GP6901100-HM061	WR 105 110 9.7
110.0	105.0	15.0	2.50	GP7301100-HM061	WR 105 110 15
115.0	110.0	9.7	2.50	GP6901150-HM061	WR 110 115 9.7
115.0	110.0	15.0	2.50	GP7301150-HM061	WR 110 115 15
120.0	115.0	9.7	2.50	GP6901200-HM061	WR 115 120 9.7
125.0	**120.0**	**5.6**	**2.50**	**GP6501250-HM061**	**WR 120 125 5.6**
125.0	**120.0**	**9.7**	**2.50**	**GP6901250-HM061**	**WR 120 125 9.7**
125.0	**120.0**	**15.0**	**2.50**	**GP7301250-HM061**	**WR 120 125 15**
130.0	125.0	15.0	2.50	GP7301300-HM061	WR 125 130 15
140.0	**135.0**	**9.7**	**2.50**	**GP6901400-HM061**	**WR 135 140 9.7**
140.0	**135.0**	**15.0**	**2.50**	**GP7301400-HM061**	**WR 135 140 15**
160.0	**155.0**	**9.7**	**2.50**	**GP6901600-HM061**	**WR 155 160 9.7**
160.0	**155.0**	**15.0**	**2.50**	**GP7301600-HM061**	**WR 155 160 15**
200.0	**195.0**	**15.0**	**2.50**	**GP7302000-HM061**	**WR 195 200 15**

All sizes printed in **bold** type conform to ISO 10766 and should be preferred for use.

Installation Recommendation, HiMod® Slydring® for Piston Non ISO 10766 Groove Dimension

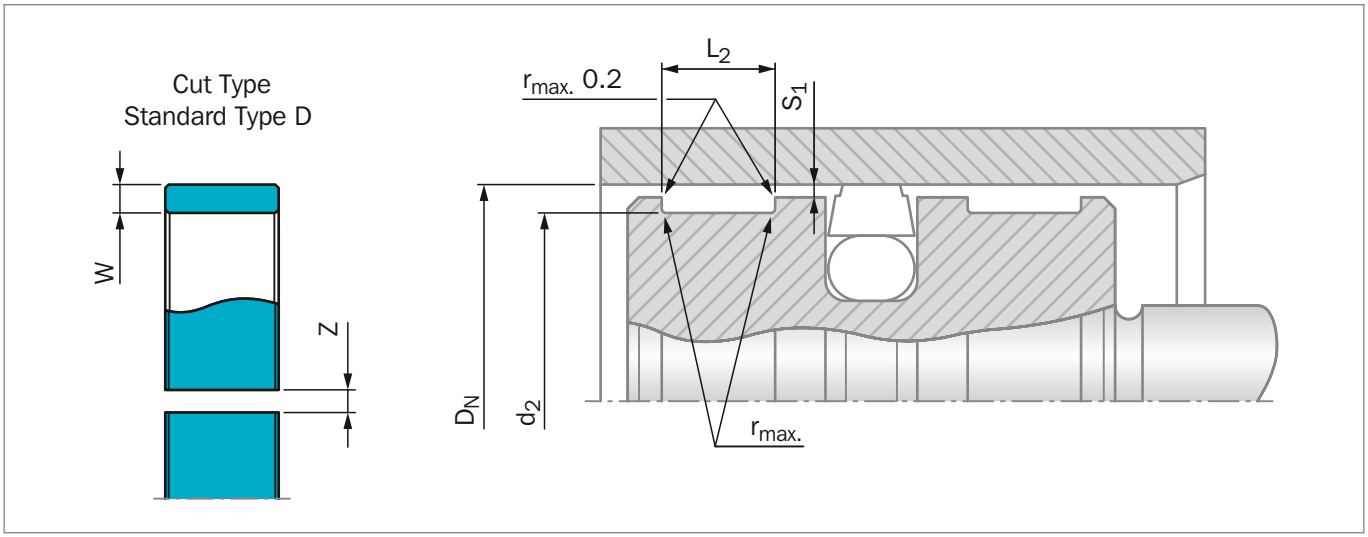

Figure 214: Installation Drawing

Table 204: Installation Dimensions HiMod® Slydring® for Piston non ISO 10766 Groove Dimensions

Series No.	Groove Diameter d_2 h8	Groove Width L_2 +0.2	Ring Thickness W
GP49	D_N - 4.00	9.70	2.00
GP51	D_N - 4.00	10.00	2.00
GP53	D_N - 4.00	15.00	2.00
GP54	D_N - 4.00	20.00	2.00
GP67	D_N - 5.00	6.30	2.50
GP68	D_N - 5.00	8.10	2.50
GP71	D_N - 5.00	10.00	2.50
GPN1	D_N - 6.00	9.70	3.00

Series No.	Groove Diameter d_2 h8	Groove Width L_2 +0.2	Ring Thickness W
GP91	D_N - 6.00	10.00	3.00
GP92	D_N - 6.00	12.00	3.00
GPN3	D_N - 6.00	12.80	3.00
GP93	D_N - 6.00	15.00	3.00
GPN4	D_N - 6.00	19.20	3.00
GP94	D_N - 6.00	20.00	3.00
GP95	D_N - 6.00	25.00	3.00
GPL2	D_N - 8.00	15.00	4.00

Table 205: Recommended Radii for Groove Diameter

D_N	r_{max}
8 - 250	0.2
> 250	0.4

Table 206: Radial Clearance S_1*

Bore Diameter D_N	$S_{1\ min}$	$S_{1\ max}$
8 - 20	0.20	0.30
20 - 100	0.25	0.40
101 - 250	0.30	0.60
251 - 300	0.40	0.80

* Specifications valid only in the area of the Slydring®, but not for the seal area.

Table 207: Recommended Gap

D_N	Ring Gap Z_1
16 - 49	1 - 1.5
50 - 154	1.5 - 2.5
> 155	2 - 4

Table 208: Surface Roughness

Parameter	Mating Surface µm HiMod® Materials	Groove Surface µm
R_{max}	1.00 - 4.00	< 16.0
R_z	0.63 - 2.50	< 10.0
R_a	0.10 - 0.40	< 2.5

Note
HM062 material can be ordered by replacing the HM061 material code in the TSS Article Number.

Please check with your local Trelleborg Sealing Solutions Marketing Company the availability and price of the HM062. This material may require new molds.

ORDERING EXAMPLE

For Polypac Slydring® Ref. No. E/DWR 20/2
Bore diameter D_N = 20.0 mm

Groove Width:	9.70 mm
Ring Thickness:	2.00 mm
Material:	HM061
Standard Design:	With angle cut Design code: 0

TSS Article No. GP49 D 0200 - HM061

- TSS Series No. — GP49
- Design Code (Standard) — D
- Bore Diameter x 10 — 0200
- Quality Index (Standard) — -
- Material No. — HM061

Table 209: Slydring® for Piston in HM061

Dimensions				TSS Article No.	Polypac Ref. No.
Bore Diameter	Groove Diameter	Groove Width	Thickness		
D_N H11	d_2 h9	L_2 +0.2	W		
16.0	12.0	9.7	2.00	GP49D0160-HM061	E/DWR 16/2-9.6
18.0	14.0	9.7	2.00	GP49D0180-HM061	E/DWR 18/2-9.6
20.0	16.0	9.7	2.00	GP49D0200-HM061	E/DWR 20/2-9.6
22.0	18.0	9.7	2.00	GP49D0220-HM061	E/DWR 22/2-9.6
24.0	20.0	9.7	2.00	GP49D0240-HM061	E/DWR 24/2-9.6
25.0	21.0	9.7	2.00	GP49D0250-HM061	E/DWR 25/2-9.6
26.0	22.0	9.7	2.00	GP49D0260-HM061	E/DWR 26/2-9.6
27.0	23.0	9.7	2.00	GP49D0270-HM061	E/DWR 27/2-9.6
28.0	24.0	9.7	2.00	GP49D0280-HM061	E/DWR 28/2-9.6
29.0	25.0	9.7	2.00	GP49D0290-HM061	E/DWR 29/2-9.6
30.0	26.0	9.7	2.00	GP49D0300-HM061	E/DWR 30/2-9.6
32.0	28.0	9.7	2.00	GP49D0320-HM061	E/DWR 32/2-9.6
33.0	29.0	9.7	2.00	GP49D0330-HM061	E/DWR 33/2-9.6
34.0	30.0	9.7	2.00	GP49D0340-HM061	E/DWR 34/2-9.6
35.0	31.0	9.7	2.00	GP49D0350-HM061	E/DWR 35/2-9.6
35.0	29.0	9.7	3.00	GPN1D0350-HM061	E/DWR 35/3-9.6
36.0	32.0	9.7	2.00	GP49D0360-HM061	E/DWR 36/2-9.6
38.0	34.0	9.7	2.00	GP49D0380-HM061	E/DWR 38/2-9.6

Dimensions				TSS Article No.	Polypac Ref. No.
Bore Diameter	Groove Diameter	Groove Width	Thickness		
D_N H11	d_2 h9	L_2 +0.2	W		
39.0	35.0	9.7	2.00	GP49D0390-HM061	E/DWR 39/2-9.6
39.0	35.0	12.8	2.00	GPN3D0390-HM061	E/DWR 39/2-12.8
39.0	33.0	9.7	3.00	GPN1D0390-HM061	E/DWR 39/3-9.6
40.0	36.0	9.7	2.00	GP49D0400-HM061	E/DWR 40/2-9.6
40.0	34.0	9.7	3.00	GPN1D0400-HM061	E/DWR 40/3-9.6
42.0	38.0	9.7	2.00	GP49D0420-HM061	E/DWR 42/2-9.6
44.0	40.0	9.7	2.00	GP49D0440-HM061	E/DWR 44/2-9.6
44.0	38.0	9.7	3.00	GPN1D0440-HM061	E/DWR 44/3-9.6
45.0	41.0	9.7	2.00	GP49D0450-HM061	E/DWR 45/2-9.6
45.0	39.0	9.7	3.00	GPN1D0450-HM061	E/DWR 45/3-9.6
46.0	40.0	9.7	3.00	GPN1D0460-HM061	E/DWR 46/3-9.6
48.0	42.0	9.7	3.00	GPN1D0480-HM061	E/DWR 48/3-9.6
48.0	42.0	12.8	3.00	GPN3D0480-HM061	E/DWR 48/3-12.8
49.0	45.0	9.7	2.00	GP49D0490-HM061	E/DWR 49/2-9.6
49.0	43.0	9.7	3.00	GPN1D0490-HM061	E/DWR 49/3-9.6
50.0	44.0	9.7	3.00	GPN1D0500-HM061	E/DWR 50/3-9.6
50.0	44.0	12.8	3.00	GPN3D0500-HM061	E/DWR 50/3-12.8
52.0	46.0	12.8	3.00	GPN3D0520-HM061	E/DWR 52/3-12.8
53.0	47.0	9.7	3.00	GPN1D0530-HM061	E/DWR 53/3-9.6
54.0	48.0	12.8	3.00	GPN3D0540-HM061	E/DWR 54/3-12.8
55.0	51.0	9.7	2.00	GP49D0550-HM061	E/DWR 55/2-9.6
55.0	49.0	9.7	3.00	GPN1D0550-HM061	E/DWR 55/3-9.6
55.0	49.0	12.8	3.00	GPN3D0550-HM061	E/DWR 55/3-12.8
56.0	50.0	12.8	3.00	GPN3D0560-HM061	E/DWR 56/3-12.8
57.0	51.0	12.8	3.00	GPN3D0570-HM061	E/DWR 57/3-12.8
59.0	55.0	9.7	2.00	GP49D0590-HM061	E/DWR 59/2-9.6
60.0	56.0	9.7	2.00	GP49D0600-HM061	E/DWR 60/2-9.6
60.0	54.0	12.8	3.00	GPN3D0600-HM061	E/DWR 60/3-12.8
62.0	56.0	12.8	3.00	GPN3D0620-HM061	E/DWR 62/3-12.8
63.0	57.0	12.8	3.00	GPN3D0630-HM061	E/DWR 63/3-12.8
65.0	61.0	9.7	2.00	GP49D0650-HM061	E/DWR 65/2-9.6
65.0	59.0	12.8	3.00	GPN3D0650-HM061	E/DWR 65/3-12.8
67.0	61.0	12.8	3.00	GPN3D0670-HM061	E/DWR 67/3-12.8
68.0	62.0	12.8	3.00	GPN3D0680-HM061	E/DWR 68/3-12.8
70.0	64.0	12.8	3.00	GPN3D0700-HM061	E/DWR 70/3-12.8
71.0	65.0	12.8	3.00	GPN3D0710-HM061	E/DWR 71/3-12.8
72.0	66.0	12.8	3.00	GPN3D0720-HM061	E/DWR 72/3-12.8
74.0	70.0	9.7	2.00	GP49D0740-HM061	E/DWR 74/2-9.6
74.0	68.0	12.8	3.00	GPN3D0740-HM061	E/DWR 74/3-12.8
75.0	69.0	12.8	3.00	GPN3D0750-HM061	E/DWR 75/3-12.8
76.0	70.0	12.8	3.00	GPN3D0760-HM061	E/DWR 76/3-12.8
77.0	71.0	12.8	3.00	GPN3D0770-HM061	E/DWR 77/3-12.8
80.0	74.0	12.8	3.00	GPN3D0800-HM061	E/DWR 80/3-12.8
83.0	77.0	12.8	3.00	GPN3D0830-HM061	E/DWR 83/3-12.8

Dimensions				TSS Article No.	Polypac Ref. No.
Bore Diameter	Groove Diameter	Groove Width	Thickness		
D_N H11	d_2 h9	L_2 +0.2	W		
84.0	78.0	12.8	3.00	GPN3D0840-HM061	E/DWR 84/3-12.8
85.0	79.0	12.8	3.00	GPN3D0850-HM061	E/DWR 85/3-12.8
88.0	82.0	12.8	3.00	GPN3D0880-HM061	E/DWR 88/3-12.8
89.0	83.0	12.8	3.00	GPN3D0890-HM061	E/DWR 89/3-12.8
90.0	84.0	12.8	3.00	GPN3D0900-HM061	E/DWR 90/3-12.8
91.0	85.0	12.8	3.00	GPN3D0910-HM061	E/DWR 91/3-12.8
92.0	86.0	12.8	3.00	GPN3D0920-HM061	E/DWR 92/3-12.8
93.0	87.0	12.8	3.00	GPN3D0930-HM061	E/DWR 93/3-12.8
94.0	88.0	12.8	3.00	GPN3D0940-HM061	E/DWR 94/3-12.8
95.0	89.0	12.8	3.00	GPN3D0950-HM061	E/DWR 95/3-12.8
100.0	94.0	9.7	3.00	GPN1D1000-HM061	E/DWR 100/3-9.6
100.0	94.0	12.8	3.00	GPN3D1000-HM061	E/DWR 100/3-12.8
102.0	96.0	12.8	3.00	GPN3D1020-HM061	E/DWR 102/3-12.8
104.0	98.0	12.8	3.00	GPN3D1040-HM061	E/DWR 104/3-12.8
105.0	99.0	12.8	3.00	GPN3D1050-HM061	E/DWR 105/3-12.8
105.0	99.0	19.2	3.00	GPN4D1050-HM061	E/DWR 105/3-19.2
108.0	102.0	12.8	3.00	GPN3D1080-HM061	E/DWR 108/3-12.8
110.0	104.0	12.8	3.00	GPN3D1100-HM061	E/DWR 110/3-12.8
112.0	106.0	19.2	3.00	GPN4D1120-HM061	E/DWR 112/3-19.2
115.0	109.0	12.8	3.00	GPN3D1150-HM061	E/DWR 115/3-12.8
115.0	109.0	19.2	3.00	GPN4D1150-HM061	E/DWR 115/3-19.2
116.0	110.0	12.8	3.00	GPN3D1160-HM061	E/DWR 116/3-12.8
116.0	110.0	19.2	3.00	GPN4D1160-HM061	E/DWR 116/3-19.2
118.0	112.0	12.8	3.00	GPN3D1180-HM061	E/DWR 118/3-12.8
120.0	114.0	12.8	3.00	GPN3D1200-HM061	E/DWR 120/3-12.8
121.0	115.0	12.8	3.00	GPN3D1210-HM061	E/DWR 121/3-12.8
123.0	117.0	12.8	3.00	GPN3D1230-HM061	E/DWR 123/3-12.8
125.0	119.0	12.8	3.00	GPN3D1250-HM061	E/DWR 125/3-12.8
125.0	119.0	19.2	3.00	GPN4D1250-HM061	E/DWR 125/3-19.2
126.0	120.0	12.8	3.00	GPN3D1260-HM061	E/DWR 126/3-12.8
127.0	121.0	12.8	3.00	GPN3D1270-HM061	E/DWR 127/3-12.8
130.0	124.0	12.8	3.00	GPN3D1300-HM061	E/DWR 130/3-12.8
130.0	124.0	19.2	3.00	GPN4D1300-HM061	E/DWR 130/3-19.2
133.0	127.0	12.8	3.00	GPN3D1330-HM061	E/DWR 133/3-12.8
135.0	129.0	12.8	3.00	GPN3D1350-HM061	E/DWR 135/3-12.8
135.0	129.0	19.2	3.00	GPN4D1350-HM061	E/DWR 135/3-19.2
140.0	134.0	12.8	3.00	GPN3D1400-HM061	E/DWR 140/3-12.8
140.0	134.0	19.2	3.00	GPN4D1400-HM061	E/DWR 140/3-19.2
145.0	139.0	12.8	3.00	GPN3D1450-HM061	E/DWR 145/3-12.8
145.0	139.0	19.2	3.00	GPN4D1450-HM061	E/DWR 145/3-19.2
146.0	140.0	12.8	3.00	GPN3D1460-HM061	E/DWR 146/3-12.8
147.0	141.0	12.8	3.00	GPN3D1470-HM061	E/DWR 147/3-12.8
150.0	144.0	12.8	3.00	GPN3D1500-HM061	E/DWR 150/3-12.8
150.0	144.0	19.2	3.00	GPN4D1500-HM061	E/DWR 150/3-19.2

Dimensions				TSS Article No.	Polypac Ref. No.
Bore Diameter	Groove Diameter	Groove Width	Thickness		
D_N H11	d_2 h9	L_2 +0.2	W		
151.0	145.0	12.8	3.00	GPN3D1510-HM061	E/DWR 151/3-12.8
152.0	146.0	19.2	3.00	GPN4D1520-HM061	E/DWR 152/3-19.2
153.0	147.0	19.2	3.00	GPN4D1530-HM061	E/DWR 153/3-19.2
154.0	148.0	19.2	3.00	GPN4D1540-HM061	E/DWR 154/3-19.2
155.0	149.0	19.2	3.00	GPN4D1550-HM061	E/DWR 155/3-19.2
158.0	152.0	19.2	3.00	GPN4D1580-HM061	E/DWR 158/3-19.2
160.0	154.0	19.2	3.00	GPN4D1600-HM061	E/DWR 160/3-19.2
165.0	159.0	19.2	3.00	GPN4D1650-HM061	E/DWR 165/3-19.2
168.0	162.0	12.8	3.00	GPN3D1680-HM061	E/DWR 168/3-12.8
168.0	162.0	19.2	3.00	GPN4D1680-HM061	E/DWR 168/3-19.2
170.0	164.0	19.2	3.00	GPN4D1700-HM061	E/DWR 170/3-19.2
172.0	166.0	19.2	3.00	GPN4D1720-HM061	E/DWR 172/3-19.2
175.0	169.0	19.2	3.00	GPN4D1750-HM061	E/DWR 175/3-19.2
180.0	174.0	19.2	3.00	GPN4D1800-HM061	E/DWR 180/3-19.2
181.0	175.0	19.2	3.00	GPN4D1810-HM061	E/DWR 181/3-19.2
185.0	179.0	19.2	3.00	GPN4D1850-HM061	E/DWR 185/3-19.2
189.0	183.0	19.2	3.00	GPN4D1890-HM061	E/DWR 189/3-19.2
190.0	184.0	19.2	3.00	GPN4D1900-HM061	E/DWR 190/3-19.2
192.0	186.0	19.2	3.00	GPN4D1920-HM061	E/DWR 192/3-19.2
195.0	189.0	19.2	3.00	GPN4D1950-HM061	E/DWR 195/3-19.2
200.0	194.0	19.2	3.00	GPN4D2000-HM061	E/DWR 200/3-19.2
205.0	199.0	19.2	3.00	GPN4D2050-HM061	E/DWR 205/3-19.2
210.0	204.0	19.2	3.00	GPN4D2100-HM061	E/DWR 210/3-19.2
215.0	209.0	19.2	3.00	GPN4D2150-HM061	E/DWR 215/3-19.2
217.0	211.0	19.2	3.00	GPN4D2170-HM061	E/DWR 217/3-19.2
220.0	214.0	19.2	3.00	GPN4D2200-HM061	E/DWR 220/3-19.2
225.0	219.0	19.2	3.00	GPN4D2250-HM061	E/DWR 225/3-19.2
230.0	224.0	19.2	3.00	GPN4D2300-HM061	E/DWR 230/3-19.2
235.0	229.0	19.2	3.00	GPN4D2350-HM061	E/DWR 235/3-19.2
237.0	231.0	19.2	3.00	GPN4D2370-HM061	E/DWR 237/3-19.2
240.0	234.0	19.2	3.00	GPN4D2400-HM061	E/DWR 240/3-19.2
245.0	239.0	19.2	3.00	GPN4D2450-HM061	E/DWR 245/3-19.2
250.0	244.0	19.2	3.00	GPN4D2500-HM061	E/DWR 250/3-19.2
254.0	248.0	19.2	3.00	GPN4D2540-HM061	E/DWR 254/3-19.2
255.0	249.0	19.2	3.00	GPN4D2550-HM061	E/DWR 255/3-19.2
260.0	254.0	19.2	3.00	GPN4D2600-HM061	E/DWR 260/3-19.2
265.0	259.0	19.2	3.00	GPN4D2650-HM061	E/DWR 265/3-19.2
270.0	264.0	19.2	3.00	GPN4D2700-HM061	E/DWR 270/3-19.2
275.0	269.0	19.2	3.00	GPN4D2750-HM061	E/DWR 275/3-19.2
280.0	274.0	19.2	3.00	GPN4D2800-HM061	E/DWR 280/3-19.2
285.0	279.0	19.2	3.00	GPN4D2850-HM061	E/DWR 285/3-19.2
290.0	284.0	19.2	3.00	GPN4D2900-HM061	E/DWR 290/3-19.2
295.0	289.0	19.2	3.00	GPN4D2950-HM061	E/DWR 295/3-19.2
300.0	294.0	19.2	3.00	GPN4D3000-HM061	E/DWR 300/3-19.2

Installation Recommendation, HiMod® Slydring® for Rod According to ISO 10766 Groove Dimension

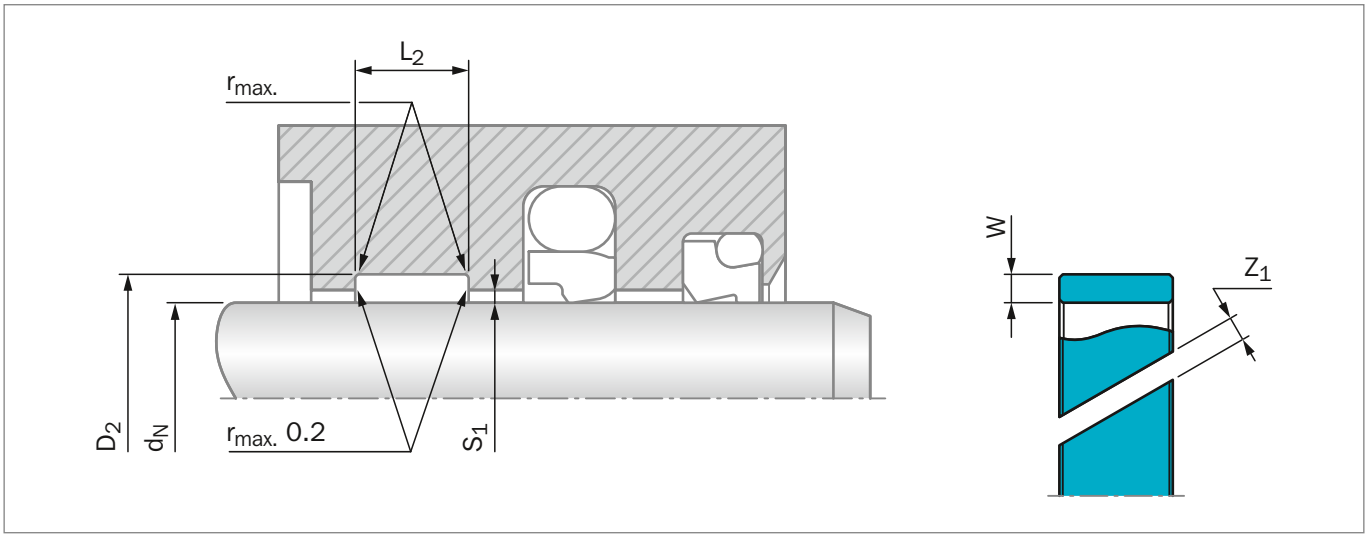

Figure 215: Installation Drawing

Table 210: Installation Dimensions

Serial No.	Rod Diameter*	Groove Diameter	Groove Width	Ring Thickness
	d_N f8/h9	D_2 H8	L_2 +0.2	W
GR43	10 - 50.0	d_N + 3.10	4.00	1.55
GR65	15 - 140.0	d_N + 5.00	5.60	2.50
GR69	20 - 220.0	d_N + 5.00	9.70	2.50
GR73	80 - 300.0	d_N + 5.00	15.00	2.50
GR75	200 - 300.0	d_N + 5.00	25.00	2.50
GR98	280 - 300.0	d_N + 8.00	25.00	4.00

* Recommended diameter ranges.
For Slydring® to other standds, e.g. French standard NF E 48-037, please contact your local Trelleborg Sealing Solutions Marketing Company.

Table 211: Recommended Radii for Groove Diameter

D_N	r_{max}
8 - 250	0.2
> 250	0.4

Table 212: Radial Clearance S_1**

Rod Diameter D_N	$S_{1\ min}$	$S_{1\ max}$
8 - 20	0.20	0.30
20 - 100	0.25	0.40
101 - 250	0.30	0.60
251 - 300	0.40	0.80

** Specifications valid only in the area of the Slydring® , but not for the seal area.

Table 213: Recommended Gap

D_N	Ring Gap Z_1
10 - 39	2 - 2.5
40 - 149	2 - 3
> 150	3 - 4

Table 214: Surface Roughness

Parameter	Mating Surface µm HiMod® Materials	Groove Surface µm
R_{max}	1.00 - 4.00	< 16.0
R_z	0.63 - 2.50	< 10.0
R_a	0.10 - 0.40	< 2.5

ORDERING EXAMPLE

Slydring® for rod diameter d_N = 63.0 mm
Series GR69 from Table 210

Groove Width:	9.70 mm
Ring Thickness:	2.50 mm
Material:	HiMod® HM061 other materials see Table 185
Standard Design:	With angle cut Design code: 0
TSS Part No.:	GR6900630-HM061 from Table 215

Note
HM062 material can be ordered by replacing the HM061 material code in the TSS Article Number.

Please check with your local Trelleborg Sealing Solutions Marketing Company the availability and price of the HM062. This material may require new molds.

TSS Article No. GR69 0 0630 - HM061
TSS Series No.
Design Code (Standard)
Rod Diameter x 10
Quality Index (Standard)
Material No.

Table 215: Slydring® for Rods in HM061

Dimensions				TSS Article No.	Polypac Ref. No.
Rod Diameter	Groove Diameter	Groove Width	Thickness		
d_N f8/h9	D_2 H8	L_2 +0.2	W		
20.0	**23.1**	**4.0**	**1.55**	**GR4300200-HM061**	**WR 20 23.1 4**
20.0	25.0	5.6	2.50	GR6500200-HM061	WR 20 25 5.6
20.0	25.0	9.7	2.50	GR6900200-HM061	WR 20 25 9.7
22.0	27.0	5.6	2.50	GR6500220-HM061	WR 22 27 5.6
22.0	27.0	9.7	2.50	GR6900220-HM061	WR 22 27 9.7
25.0	**28.1**	**4.0**	**1.55**	**GR4300250-HM061**	**WR 25 28.1 4**
25.0	**30.0**	**5.6**	**2.50**	**GR6500250-HM061**	**WR 25 30 5.6**
25.0	30.0	9.7	2.50	GR6900250-HM061	WR 25 30 9.7
27.0	32.0	5.6	2.50	GR6500270-HM061	WR 27 32 5.6
27.0	32.0	9.7	2.50	GR6900270-HM061	WR 27 32 9.7
28.0	**33.0**	**5.6**	**2.50**	**GR6500280-HM061**	**WR 28 33 5.6**
30.0	35.0	5.6	2.50	GR6500300-HM061	WR 30 35 5.6
30.0	35.0	9.7	2.50	GR6900300-HM061	WR 30 35 9.7
32.0	**37.0**	**5.6**	**2.50**	**GR6500320-HM061**	**WR 32 37 5.6**

Dimensions				TSS Article No.	Polypac Ref. No.
Rod Diameter	Groove Diameter	Groove Width	Thickness		
d_N f8/h9	D_2 H8	L_2 +0.2	W		
32.0	**37.0**	**9.7**	**2.50**	**GR6900320-HM061**	**WR 32 37 9.7**
35.0	40.0	5.6	2.50	GR6500350-HM061	WR 35 40 5.6
35.0	40.0	9.7	2.50	GR6900350-HM061	WR 35 40 9.7
36.0	**41.0**	**5.6**	**2.50**	**GR6500360-HM061**	**WR 36 41 5.6**
36.0	**41.0**	**9.7**	**2.50**	**GR6900360-HM061**	**WR 36 41 9.7**
40.0	**45.0**	**5.6**	**2.50**	**GR6500400-HM061**	**WR 40 45 5.6**
40.0	**45.0**	**9.7**	**2.50**	**GR6900400-HM061**	**WR 40 45 9.7**
40.0	45.0	15.0	2.50	GR7300400-HM061	WR 40 45 15
45.0	**50.0**	**5.6**	**2.50**	**GR6500450-HM061**	**WR 45 50 5.6**
45.0	**50.0**	**9.7**	**2.50**	**GR6900450-HM061**	**WR 45 50 9.7**
45.0	50.0	15.0	2.50	GR7300450-HM061	WR 45 50 15
47.0	52.0	5.6	2.50	GR6500470-HM061	WR 47 52 5.6
50.0	**55.0**	**5.6**	**2.50**	**GR6500500-HM061**	**WR 50 55 5.6**
50.0	**55.0**	**9.7**	**2.50**	**GR6900500-HM061**	**WR 50 55 9.7**
50.0	55.0	15.0	2.50	GR7300500-HM061	WR 50 55 15
52.0	57.0	5.6	2.50	GR6500520-HM061	WR 52 57 5.6
52.0	57.0	9.7	2.50	GR6900520-HM061	WR 52 57 9.7
53.0	58.0	9.7	2.50	GR6900530-HM061	WR 53 58 9.7
55.0	60.0	5.6	2.50	GR6500550-HM061	WR 55 60 5.6
55.0	60.0	9.7	2.50	GR6900550-HM061	WR 55 60 9.7
56.0	**61.0**	**5.6**	**2.50**	**GR6500560-HM061**	**WR 56 61 5.6**
56.0	**61.0**	**9.7**	**2.50**	**GR6900560-HM061**	**WR 56 61 9.7**
58.0	63.0	5.6	2.50	GR6500580-HM061	WR 58 63 5.6
58.0	63.0	9.7	2.50	GR6900580-HM061	WR 58 63 9.7
60.0	65.0	5.6	2.50	GR6500600-HM061	WR 60 65 5.6
60.0	65.0	9.7	2.50	GR6900600-HM061	WR 60 65 9.7
63.0	**68.0**	**5.6**	**2.50**	**GR6500630-HM061**	**WR 63 68 5.6**
63.0	**68.0**	**9.7**	**2.50**	**GR6900630-HM061**	**WR 63 68 9.7**
63.0	68.0	15.0	2.50	GR7300630-HM061	ER 63 68 15
65.0	70.0	5.6	2.50	GR6500650-HM061	WR 65 70 5.6
65.0	70.0	9.7	2.50	GR6900650-HM061	WR 65 70 9.7
67.0	72.0	5.6	2.50	GR6500670-HM061	WR 67 72 5.6
70.0	**75.0**	**5.6**	**2.50**	**GR6500700-HM061**	**WR 70 75 5.6**
70.0	**75.0**	**9.7**	**2.50**	**GR6900700-HM061**	**WR 70 75 9.7**
70.0	75.0	15.0	2.50	GR7300700-HM061	WR 70 75 15
75.0	80.0	5.6	2.50	GR6500750-HM061	WR 75 80 5.6
75.0	80.0	9.7	2.50	GR6900750-HM061	WR 75 80 9.7
75.0	80.0	15.0	2.50	GR7300750-HM061	WR 75 80 15
80.0	85.0	5.6	2.50	GR6500800-HM061	WR 80 85 5.6
80.0	**85.0**	**9.7**	**2.50**	**GR6900800-HM061**	**WR 80 85 9.7**
80.0	**85.0**	**15.0**	**2.50**	**GR7300800-HM061**	**WR 80 85 15**

Dimensions				TSS Article No.	Polypac Ref. No.
Rod Diameter	Groove Diameter	Groove Width	Thickness		
d_N f8/h9	D_2 H8	L_2 +0.2	W		
85.0	90.0	5.6	2.50	GR6500850-HM061	WR 85 90 5.6
85.0	90.0	9.7	2.50	GR6900850-HM061	WR 85 90 9.7
85.0	90.0	15.0	2.50	GR7300850-HM061	WR 85 90 15
90.0	95.0	5.6	2.50	GR6500900-HM061	WR 90 95 5.6
90.0	**95.0**	**9.7**	**2.50**	**GR6900900-HM061**	**WR 90 95 9.7**
92.0	97.0	25.0	2.50	GR7500920-HM061	WR 92 97 25
95.0	100.0	5.6	2.50	GR6500950-HM061	WR 95 100 5.6
95.0	100.0	9.7	2.50	GR6900950-HM061	WR 95 100 9.7
95.0	100.0	15.0	2.50	GR7300950-HM061	WR 95 100 15
100.0	105.0	5.6	2.50	GR6501000-HM061	WR 100 105 5.6
100.0	**105.0**	**9.7**	**2.50**	**GR6901000-HM061**	**WR 100 105 9.7**
100.0	**105.0**	**15.0**	**2.50**	**GR7301000-HM061**	**WR 100 105 15**
105.0	110.0	9.7	2.50	GR6901050-HM061	WR 105 110 9.7
105.0	110.0	15.0	2.50	GR7301050-HM061	WR 105 110 15
110.0	**115.0**	**9.7**	**2.50**	**GR6901100-HM061**	**WR 110 115 9.7**
110.0	**115.0**	**15.0**	**2.50**	**GR7301100-HM061**	**WR 110 115 15**
115.0	120.0	9.7	2.50	GR6901150-HM061	WR 115 120 9.7
120.0	125.0	5.6	2.50	GR6501200-HM061	WR 120 125 5.6
120.0	125.0	9.7	2.50	GR6901200-HM061	WR 120 125 9.7
120.0	125.0	15.0	2.50	GR7301200-HM061	WR 120 125 15
125.0	**130.0**	**15.0**	**2.50**	**GR7301250-HM061**	**WR 125 130 15**
135.0	140.0	9.7	2.50	GR6901350-HM061	WR 135 140 9.7
135.0	140.0	15.0	2.50	GR7301350-HM061	WR 135 140 15
155.0	160.0	15.0	2.50	GR7301550-HM061	WR 155 160 15
195.0	200.0	15.0	2.50	GR7301950-HM061	WR 195 200 15

All sizes printed in **bold** type conform to ISO 10766 and should be preferred for use.

Installation Recommendation, HiMod® Slydring® for Rod Non ISO 10766 Groove Dimension

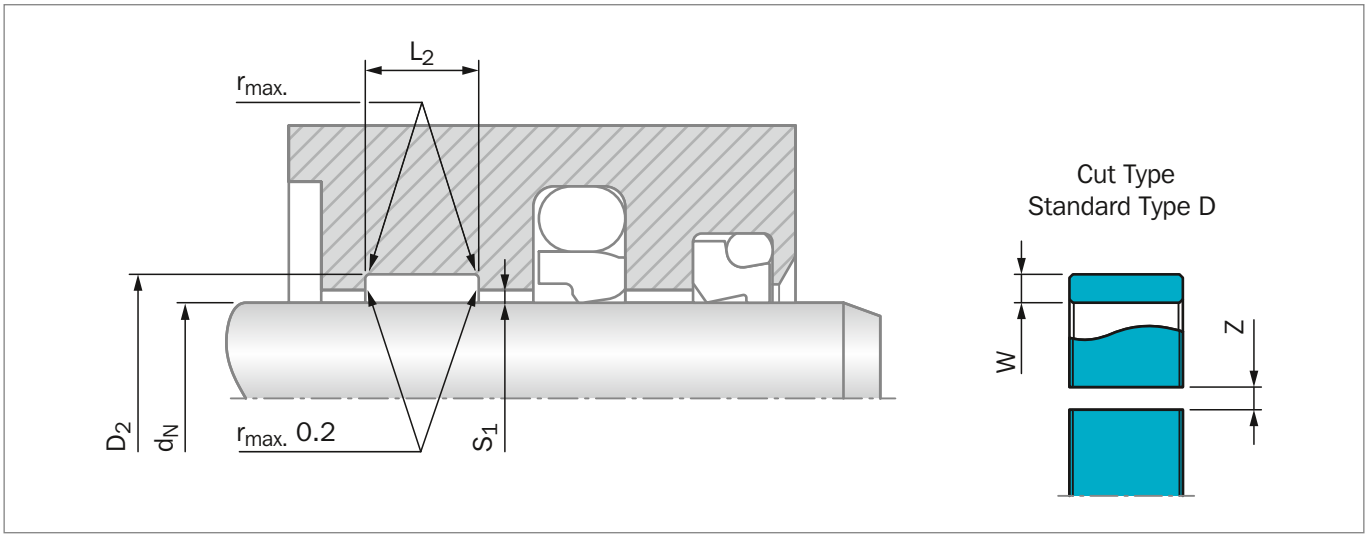

Figure 216: Installation Drawing

Table 216: Installation Dimensions HiMod® Slydring® for Rod non ISO 10766 Groove Dimensions

Serial No.	Groove Diameter D_2 H8	Groove Width L_2 +0.2	Ring Thickness W
GR48	d_N + 4.00	8.10	2.00
GR49	d_N + 4.00	9.70	2.00
GR51	d_N + 4.00	10.00	2.00
GRN5	d_N + 4.00	12.80	2.00
GR53	d_N + 4.00	15.00	2.00
GR54	d_N + 4.00	20.00	2.00
GRN1	d_N + 6.00	9.70	3.00
GR91	d_N + 6.00	10.00	3.00

Serial No.	Groove Diameter D_2 H8	Groove Width L_2 +0.2	Ring Thickness W
GR92	d_N + 6.00	12.00	3.00
GRN3	d_N + 6.00	12.80	3.00
GRN4	d_N + 6.00	19.20	3.00
GR94	d_N + 6.00	20.00	3.00
GR95	d_N + 6.00	25.00	3.00
GR96	d_N + 6.00	30.00	3.00
GRL5	d_N + 8.00	30.00	4.00

Table 217: Recommended Radii for Groove Diameter

d_N	r_{max}
8 - 250	0.2
> 250	0.4

Table 218: Radial Clearance S_1*

Rod Diameter d_N	$S_{1\ min}$	$S_{1\ max}$
8 - 20	0.20	0.30
20 - 100	0.25	0.40
101 - 250	0.30	0.60
251 - 500	0.40	0.80
501 - 1000	0.50	1.10
> 1001	0.60	1.20

* Specifications valid only in the area of the Slydring®, but not for the seal area.

Table 219: Recommended Gap

d_N	Ring Gap Z_1
12 - 40	1 - 1.5
41 - 149	1.5 - 2.5
> 150	2 - 4

Table 220: Surface Roughness

Parameter	Mating Surface µm HiMod® Materials	Groove Surface µm
R_{max}	1.00 - 4.00	< 16.0
R_z	0.63 - 2.50	< 10.0
R_a	0.10 - 0.40	< 2.5

Note
HM062 material can be ordered by replacing the HM061 material code in the TSS Article Number.

Please check with your local Trelleborg Sealing Solutions Marketing Company the availability and price of the HM062. This material may require new molds.

ORDERING EXAMPLE

For Polypac Slydring® Ref. No. I/DWR 40/2
Rod diameter d_N = 40.0 mm

Groove Width:	9.70 mm
Ring Thickness:	2.50 mm
Material:	HiMod® HM061 other materials see Table 185
Standard Design:	With angle cut Design code: 0

TSS Article No. GR49 D 0400 - HM061

- TSS Series No. — GR49
- Design Code (Standard) — D
- Rod Diameter x 10 — 0400
- Quality Index (Standard) — -
- Material No. — HM061

Table 221: Slydring® for Rod in HM061

Dimensions				TSS Article No.	Polypac Ref. No.
Rod Diameter	Groove Diameter	Groove Width	Thickness		
d_N h11	D_2 H8	L_2 +0.2	W		
12.0	16.0	9.7	2.00	GR49D0120-HM061	I/DWR 12/2-9.6
14.0	18.0	9.7	2.00	GR49D0140-HM061	I/DWR 14/2-9.6
15.0	19.0	9.7	2.00	GR49D0150-HM061	I/DWR 15/2-9.6
16.0	20.0	9.7	2.00	GR49D0160-HM061	I/DWR 16/2-9.6
18.0	22.0	9.7	2.00	GR49D0180-HM061	I/DWR 18/2-9.6
20.0	24.0	9.7	2.00	GR49D0200-HM061	I/DWR 20/2-9.6
22.0	26.0	9.7	2.00	GR49D0220-HM061	I/DWR 22/2-9.6
24.0	28.0	9.7	2.00	GR49D0240-HM061	I/DWR 24/2-9.6
25.0	29.0	9.7	2.00	GR49D0250-HM061	I/DWR 25/2-9.6
26.0	30.0	9.7	2.00	GR49D0260-HM061	I/DWR 26/2-9.6
27.0	31.0	9.7	2.00	GR49D0270-HM061	I/DWR 27/2-9.6
28.0	32.0	9.7	2.00	GR49D0280-HM061	I/DWR 28/2-9.6
30.0	34.0	9.7	2.00	GR49D0300-HM061	I/DWR 30/2-9.6
30.0	36.0	9.7	3.00	GRN1D0300-HM061	I/DWR 30/3-9.6
31.0	35.0	9.7	2.00	GR49D0310-HM061	I/DWR 31/2-9.6
32.0	36.0	9.7	2.00	GR49D0320-HM061	I/DWR 32/2-9.6

Dimensions				TSS Article No.	Polypac Ref. No.
Rod Diameter	Groove Diameter	Groove Width	Thickness		
d_N h11	D_2 H8	L_2 +0.2	W		
34.0	38.0	9.7	2.00	GR49D0340-HM061	I/DWR 34/2-9.6
35.0	39.0	9.7	2.00	GR49D0350-HM061	I/DWR 35/2-9.6
35.0	41.0	9.7	3.00	GRN1D0350-HM061	I/DWR 35/3-9.6
35.0	39.0	12.8	2.00	GRN5D0350-HM061	I/DWR 35/2-12.8
36.0	40.0	9.7	2.00	GR49D0360-HM061	I/DWR 36/2-9.6
36.0	42.0	9.7	3.00	GRN1D0360-HM061	I/DWR 36/3-9.6
37.0	41.0	9.7	2.00	GR49D0370-HM061	I/DWR 37/2-9.6
38.0	42.0	9.7	2.00	GR49D0380-HM061	I/DWR 38/2-9.6
40.0	44.0	9.7	2.00	GR49D0400-HM061	I/DWR 40/2-9.6
40.0	46.0	9.7	3.00	GRN1D0400-HM061	I/DWR 40/3-9.6
40.0	46.0	12.8	3.00	GRN3D0400-HM061	I/DWR 40/3-12.8
42.0	46.0	9.7	2.00	GR49D0420-HM061	I/DWR 42/2-9.6
42.0	48.0	9.7	3.00	GRN1D0420-HM061	I/DWR 42/3-9.6
44.0	50.0	9.7	3.00	GRN1D0440-HM061	I/DWR 44/3-9.6
45.0	51.0	9.7	3.00	GRN1D0450-HM061	I/DWR 45/3-9.6
45.0	51.0	12.8	3.00	GRN3D0450-HM061	I/DWR 45/3-12.8
46.0	50.0	9.7	2.00	GR49D0460-HM061	I/DWR 46/2-9.6
46.0	52.0	9.7	3.00	GRN1D0460-HM061	I/DWR 46/3-9.6
47.0	53.0	9.7	3.00	GRN1D0470-HM061	I/DWR 47/3-9.6
48.0	54.0	9.7	3.00	GRN1D0480-HM061	I/DWR 48/3-9.6
48.0	52.0	12.8	2.00	GRN5D0480-HM061	I/DWR 48/2-12.8
50.0	54.0	9.7	2.00	GR49D0500-HM061	I/DWR 50/2-9.6
50.0	56.0	9.7	3.00	GRN1D0500-HM061	I/DWR 50/3-9.6
50.0	56.0	12.8	3.00	GRN3D0500-HM061	I/DWR 50/3-12.8
52.0	58.0	9.7	3.00	GRN1D0520-HM061	I/DWR 52/3-9.6
53.0	59.0	9.7	3.00	GRN1D0530-HM061	I/DWR 53/3-9.6
54.0	60.0	9.7	3.00	GRN1D0540-HM061	I/DWR 54/3-9.6
54.0	60.0	12.8	3.00	GRN3D0540-HM061	I/DWR 54/3-12.8
55.0	59.0	9.7	2.00	GR49D0550-HM061	I/DWR 55/2-9.6
55.0	61.0	9.7	3.00	GRN1D0550-HM061	I/DWR 55/3-9.6
55.0	61.0	12.8	3.00	GRN3D0550-HM061	I/DWR 55/3-12.8
56.0	62.0	9.7	3.00	GRN1D0560-HM061	I/DWR 56/3-9.6
56.0	62.0	12.8	3.00	GRN3D0560-HM061	I/DWR 56/3-12.8
58.0	64.0	12.8	3.00	GRN3D0580-HM061	I/DWR 58/3-12.8
60.0	64.0	9.7	2.00	GR49D0600-HM061	I/DWR 60/2-9.6
60.0	66.0	9.7	3.00	GRN1D0600-HM061	I/DWR 60/3-9.6
60.0	66.0	12.8	3.00	GRN3D0600-HM061	I/DWR 60/3-12.8
61.0	67.0	12.8	3.00	GRN3D0610-HM061	I/DWR 61/3-12.8
62.0	68.0	12.8	3.00	GRN3D0620-HM061	I/DWR 62/3-12.8
63.0	69.0	12.8	3.00	GRN3D0630-HM061	I/DWR 63/3-12.8

Dimensions				TSS Article No.	Polypac Ref. No.
Rod Diameter	Groove Diameter	Groove Width	Thickness		
d_N h11	D_2 H8	L_2 +0.2	W		
65.0	71.0	12.8	3.00	GRN3D0650-HM061	I/DWR 65/3-12.8
66.0	72.0	12.8	3.00	GRN3D0660-HM061	I/DWR 66/3-12.8
67.0	73.0	12.8	3.00	GRN3D0670-HM061	I/DWR 67/3-12.8
69.0	75.0	12.8	3.00	GRN3D0690-HM061	I/DWR 69/3-12.8
70.0	76.0	12.8	3.00	GRN3D0700-HM061	I/DWR 70/3-12.8
70.0	76.0	19.2	3.00	GRN4D0700-HM061	I/DWR 70/3-19.2
72.0	78.0	12.8	3.00	GRN3D0720-HM061	I/DWR 72/3-12.8
73.0	79.0	12.8	3.00	GRN3D0730-HM061	I/DWR 73/3-12.8
75.0	81.0	12.8	3.00	GRN3D0750-HM061	I/DWR 75/3-12.8
75.0	81.0	19.2	3.00	GRN4D0750-HM061	I/DWR 75/3-19.2
76.0	82.0	12.8	3.00	GRN3D0760-HM061	I/DWR 76/3-12.8
78.0	84.0	12.8	3.00	GRN3D0780-HM061	I/DWR 78/3-12.8
79.0	85.0	12.8	3.00	GRN3D0790-HM061	I/DWR 79/3-12.8
80.0	86.0	12.8	3.00	GRN3D0800-HM061	I/DWR 80/3-12.8
80.0	86.0	19.2	3.00	GRN4D0800-HM061	I/DWR 80/3-19.2
82.0	88.0	12.8	3.00	GRN3D0820-HM061	I/DWR 82/3-12.8
84.0	90.0	12.8	3.00	GRN3D0840-HM061	I/DWR 84/3-12.8
85.0	91.0	12.8	3.00	GRN3D0850-HM061	I/DWR 85/3-12.8
85.0	91.0	19.2	3.00	GRN4D0850-HM061	I/DWR 85/3-19.2
86.0	92.0	12.8	3.00	GRN3D0860-HM061	I/DWR 86/3-12.8
88.0	94.0	12.8	3.00	GRN3D0880-HM061	I/DWR 88/3-12.8
90.0	96.0	12.8	3.00	GRN3D0900-HM061	I/DWR 90/3-12.8
90.0	96.0	19.2	3.00	GRN4D0900-HM061	I/DWR 90/3-19.2
91.0	97.0	12.8	3.00	GRN3D0910-HM061	I/DWR 91/3-12.8
92.0	98.0	12.8	3.00	GRN3D0920-HM061	I/DWR 92/3-12.8
93.0	99.0	12.8	3.00	GRN3D0930-HM061	I/DWR 93/3-12.8
95.0	101.0	12.8	3.00	GRN3D0950-HM061	I/DWR 95/3-12.8
95.0	101.0	19.2	3.00	GRN4D0950-HM061	I/DWR 95/3-19.2
96.0	102.0	12.8	3.00	GRN3D0960-HM061	I/DWR 96/3-12.8
97.0	103.0	12.8	3.00	GRN3D0970-HM061	I/DWR 97/3-12.8
98.0	104.0	12.8	3.00	GRN3D0980-HM061	I/DWR 98/3-12.8
99.0	105.0	12.8	3.00	GRN3D0990-HM061	I/DWR 99/3-12.8
99.0	105.0	19.2	3.00	GRN4D0990-HM061	I/DWR 99/3-19.2
100.0	106.0	12.8	3.00	GRN3D1000-HM061	I/DWR 100/3-12.8
100.0	106.0	19.2	3.00	GRN4D1000-HM061	I/DWR 100/3-19.2
101.0	107.0	12.8	3.00	GRN3D1010-HM061	I/DWR 101/3-12.8
105.0	111.0	12.8	3.00	GRN3D1050-HM061	I/DWR 105/3-12.8
105.0	111.0	19.2	3.00	GRN4D1050-HM061	I/DWR 105/3-19.2
106.0	112.0	19.2	3.00	GRN4D1060-HM061	I/DWR 106/3-19.2
107.0	113.0	12.8	3.00	GRN3D1070-HM061	I/DWR 107/3-12.8

Dimensions				TSS Article No.	Polypac Ref. No.
Rod Diameter	Groove Diameter	Groove Width	Thickness		
d_N h11	D_2 H8	L_2 +0.2	W		
109.0	115.0	12.8	3.00	GRN3D1090-HM061	I/DWR 109/3-12.8
110.0	116.0	12.8	3.00	GRN3D1100-HM061	I/DWR 110/3-12.8
113.0	119.0	12.8	3.00	GRN3D1130-HM061	I/DWR 113/3-12.8
115.0	121.0	12.8	3.00	GRN3D1150-HM061	I/DWR 115/3-12.8
115.0	121.0	19.2	3.00	GRN4D1150-HM061	I/DWR 115/3-19.2
117.0	123.0	12.8	3.00	GRN3D1170-HM061	I/DWR 117/3-12.8
118.0	124.0	12.8	3.00	GRN3D1180-HM061	I/DWR 118/3-12.8
120.0	126.0	12.8	3.00	GRN3D1200-HM061	I/DWR 120/3-12.8
120.0	126.0	19.2	3.00	GRN4D1200-HM061	I/DWR 120/3-19.2
123.0	129.0	12.8	3.00	GRN3D1230-HM061	I/DWR 123/3-12.8
125.0	131.0	12.8	3.00	GRN3D1250-HM061	I/DWR 125/3-12.8
125.0	131.0	19.2	3.00	GRN4D1250-HM061	I/DWR 125/3-19.2
126.0	132.0	12.8	3.00	GRN3D1260-HM061	I/DWR 126/3-12.8
127.0	133.0	12.8	3.00	GRN3D1270-HM061	I/DWR 127/3-12.8
129.0	135.0	19.2	3.00	GRN4D1290-HM061	I/DWR 129/3-19.2
130.0	136.0	12.8	3.00	GRN3D1300-HM061	I/DWR 130/3-12.8
131.0	137.0	12.8	3.00	GRN3D1310-HM061	I/DWR 131/3-12.8
132.0	138.0	12.8	3.00	GRN3D1320-HM061	I/DWR 132/3-12.8
135.0	141.0	12.8	3.00	GRN3D1350-HM061	I/DWR 135/3-12.8
138.0	144.0	12.8	3.00	GRN3D1380-HM061	I/DWR 138/3-12.8
139.0	145.0	19.2	3.00	GRN4D1390-HM061	I/DWR 139/3-19.2
140.0	146.0	12.8	3.00	GRN3D1400-HM061	I/DWR 140/3-12.8
141.0	147.0	12.0	3.00	GR92D1410-HM061	I/DWR 141/3-12.0
141.0	147.0	12.8	3.00	GRN3D1410-HM061	I/DWR 141/3-12.8
141.0	147.0	19.2	3.00	GRN4D1410-HM061	I/DWR 141/3-19.2
142.0	148.0	12.8	3.00	GRN3D1420-HM061	I/DWR 142/3-12.8
143.0	149.0	12.8	3.00	GRN3D1430-HM061	I/DWR 143/3-12.8
145.0	151.0	12.8	3.00	GRN3D1450-HM061	I/DWR 145/3-12.8
145.0	151.0	19.2	3.00	GRN4D1450-HM061	I/DWR 145/3-19.2
148.0	154.0	12.8	3.00	GRN3D1480-HM061	I/DWR 148/3-12.8
150.0	156.0	12.8	3.00	GRN3D1500-HM061	I/DWR 150/3-12.8
150.0	156.0	19.2	3.00	GRN4D1500-HM061	I/DWR 150/3-19.2
152.0	158.0	12.8	3.00	GRN3D1520-HM061	I/DWR 152/3-12.8
152.0	158.0	19.2	3.00	GRN4D1520-HM061	I/DWR 152/3-19.2
154.0	160.0	19.2	3.00	GRN4D1540-HM061	I/DWR 154/3-19.2
155.0	161.0	19.2	3.00	GRN4D1550-HM061	I/DWR 155/3-19.2
160.0	166.0	19.2	3.00	GRN4D1600-HM061	I/DWR 160/3-19.2
162.0	168.0	19.2	3.00	GRN4D1620-HM061	I/DWR 162/3-19.2
163.0	169.0	19.2	3.00	GRN4D1630-HM061	I/DWR 163/3-19.2
165.0	171.0	19.2	3.00	GRN4D1650-HM061	I/DWR 165/3-19.2

Dimensions				TSS Article No.	Polypac Ref. No.
Rod Diameter	Groove Diameter	Groove Width	Thickness		
d_N h11	D_2 H8	L_2 +0.2	W		
170.0	176.0	19.2	3.00	GRN4D1700-HM061	I/DWR 170/3-19.2
173.0	179.0	19.2	3.00	GRN4D1730-HM061	I/DWR 173/3-19.2
175.0	181.0	19.2	3.00	GRN4D1750-HM061	I/DWR 175/3-19.2
180.0	186.0	12.8	3.00	GRN3D1800-HM061	I/DWR 180/3-12.8
180.0	186.0	19.2	3.00	GRN4D1800-HM061	I/DWR 180/3-19.2
183.0	189.0	19.2	3.00	GRN4D1830-HM061	I/DWR 183/3-19.2
184.0	190.0	19.2	3.00	GRN4D1840-HM061	I/DWR 184/3-19.2
185.0	191.0	19.2	3.00	GRN4D1850-HM061	I/DWR 185/3-19.2
190.0	196.0	19.2	3.00	GRN4D1900-HM061	I/DWR 190/3-19.2
195.0	201.0	19.2	3.00	GRN4D1950-HM061	I/DWR 195/3-19.2
196.0	202.0	19.2	3.00	GRN4D1960-HM061	I/DWR 196/3-19.2
198.0	204.0	19.2	3.00	GRN4D1980-HM061	I/DWR 198/3-19.2
200.0	206.0	19.2	3.00	GRN4D2000-HM061	I/DWR 200/3-19.2
205.0	211.0	19.2	3.00	GRN4D2050-HM061	I/DWR 205/3-19.2
210.0	216.0	19.2	3.00	GRN4D2100-HM061	I/DWR 210/3-19.2
215.0	221.0	19.2	3.00	GRN4D2150-HM061	I/DWR 215/3-19.2
220.0	226.0	19.2	3.00	GRN4D2200-HM061	I/DWR 220/3-19.2
225.0	231.0	19.2	3.00	GRN4D2250-HM061	I/DWR 225/3-19.2
230.0	236.0	19.2	3.00	GRN4D2300-HM061	I/DWR 230/3-19.2
231.0	237.0	19.2	3.00	GRN4D2310-HM061	I/DWR 231/3-19.2
235.0	241.0	19.2	3.00	GRN4D2350-HM061	I/DWR 235/3-19.2
240.0	246.0	19.2	3.00	GRN4D2400-HM061	I/DWR 240/3-19.2
245.0	251.0	19.2	3.00	GRN4D2450-HM061	I/DWR 245/3-19.2
248.0	254.0	19.2	3.00	GRN4D2480-HM061	I/DWR 248/3-19.2
250.0	256.0	19.2	3.00	GRN4D2500-HM061	I/DWR 250/3-19.2
254.0	260.0	19.2	3.00	GRN4D2540-HM061	I/DWR 254/3-19.2
255.0	261.0	19.2	3.00	GRN4D2550-HM061	I/DWR 255/3-19.2
260.0	266.0	19.2	3.00	GRN4D2600-HM061	I/DWR 260/3-19.2
265.0	271.0	19.2	3.00	GRN4D2650-HM061	I/DWR 265/3-19.2
270.0	276.0	19.2	3.00	GRN4D2700-HM061	I/DWR 270/3-19.2
275.0	281.0	19.2	3.00	GRN4D2750-HM061	I/DWR 275/3-19.2
280.0	286.0	19.2	3.00	GRN4D2800-HM061	I/DWR 280/3-19.2
285.0	291.0	19.2	3.00	GRN4D2850-HM061	I/DWR 285/3-19.2
290.0	296.0	19.2	3.00	GRN4D2900-HM061	I/DWR 290/3-19.2
295.0	301.0	19.2	3.00	GRN4D2950-HM061	I/DWR 295/3-19.2
300.0	306.0	19.2	3.00	GRN4D3000-HM061	I/DWR 300/3-19.2

■ Orkot® Slydring® for Piston and Rod

DESCRIPTION

Orkot® Slydring® are manufactured from fabric-reinforced composite material using a woven fabric and thermoset resins, incorporating evenly dispersed solid lubricants. Orkot® is recommended for use in hydraulic cylinders exposed to high loads, such as in mobile hydraulics or presses. High compressive strength, good sliding behavior and exceptional wear resistance ensure a long service life.

DESIGN

Orkot® Slydring® is manufactured from either tubular or strip material cut to the right size, including an angle cut gap with the necessary width. For large diameters, > 300 mm, rings can be cut from Orkot® C320, C380 or C480 strip material. This offers economical solutions for non-standard diameters or when quantities are limited.

ADVANTAGES

- Dimensionally stable
- Vibration absorbing
- Even distribution of high radial forces
- Good sliding and dry running properties
- High wear resistance
- Long service life
- Versatile
- Can be used with wide range of media
- Stock availability

APPLICATION EXAMPLES

Orkot® Slydring is widely used as a bearing element for heavy duty hydraulic equipment, such as:

- Hydraulic actuators
- Mobile hydraulics
- Excavators
- Construction equipment
- Forrestry machinery
- Mining
- Steel mills
- Presses
- Water locks
- Marine engineering
- Oil and gas

MATERIALS

Orkot® C380
Orkot® C380 is a turquoise colored, versatile Slydring® material with enhanced sliding properties in various hydraulic media, such as mineral or synthetic oils, as well as water based fluids. It is good at damping vibrations, it offers long service life, low friction and is suitable for all commonly used counter surfaces. C380 is the first choice for most applications.

Orkot® C480
Orkot® C480 is an evolutionary development of the established C380. A finely dispersed mix of solid lubricants improve the static and dynamic coefficient of friction therefore reducing or removing the effect of stick-slip. A strong affinity with hydraulic fluid improves its potential to operate when marginally lubricated.

Orkot® C320
Orkot® C320 has been the historic choice for hydraulic applications. The woven fabric reinforced thermoset composite with lubricant additives has a very high resistance to wear, good dry-running properties and dampens vibrations.

Orkot® C932
Orkot® C932 is a composite made from a fine weave cotton fabric impregnated with a phenolic resin. The material stiffness is greater than other Orkot® Slydring materials. Use of C932 in water-based fluids is not recommended.

Table 222: Orkot® Grade and Color

Orkot Grade	Color
C380	Turquoise
C480	White
C320	Dark gray
C932	Yellow-brown

OPERATING CONDITIONS

Velocity:	Exceeding 1m/s with reciprocating movements
Temperature:	-40 °C to +120 °C
Pressure Under Dynamic Conditions:	max. 100 N/mm2 at +25 °C max. 50 N/mm2 > +60 °C
Ultimate Compressive Strength:	max. > 300 N/mm2 (C380, C480, C320) max. 260 N/mm2 (C392)

IMPORTANT NOTE

The above stated limits for pressure and speed are maximum values. Friction heat generated by the combination of pressure and speed may cause local heat build-up. Care should be taken not to apply high values for pressure and speed at the same time.

Table 223: Serial Numbers for Orkot® Slydring®, ready-to-fit

Piston Serial No.	Rod Serial No.	Groove Width	Ring Thickness
GP41	GR41	2.5	1.55
GP43	**GR43**	**4.0**	**1.55**
GP47	GR47	6.3	2.00
GP48	GR48	8.1	2.00
GP49	GR49	9.7	2.00
GP51	GR51	10.0	2.00
GP53	GR53	15.0	2.00
GP64	GR64	4.2	2.50
GP65	**GR65**	**5.6**	**2.50**
GP67	GR67	6.3	2.50
GP68	GR68	8.1	2.50
GP69	**GR69**	**9.7**	**2.50**
GP73	**GR73**	**15.0**	**2.50**
GP74	GR74	20.0	2.50
GP75	**GR75**	**25.0**	**2.50**
GP76	GR76	30.0	2.50
GP77	GR77	35.0	2.50
GP93	GR93	15.0	3.00
GP94	GR94	20.0	3.00
GP95	GR95	25.0	3.00
GP96	GR96	30.0	3.00
GP99	GR99	9.7	4.00
GPL2	GRL2	15.0	4.00
GPL3	GRL3	20.0	4.00
GP98	**GR98**	**25.0**	**4.00**
GPL5	GRL5	30.0	4.00
GPL7	GRL7	40.0	4.00
GPL9	GRL9	50.0	4.00

Note that customer specific sizes can be supplied without tooling costs.

Table 224: Part numbers for Orkot® Slydring® Coiled Strip, to cut to length

Ring Thickness	Groove Width	Part Number			
		2 meter	3 meter	5 meter	10 meter
2.50	5.6	GM65A2000-C380	-	-	-
2.50	9.7	GM69A2000-C380	GM69A3000-C380	GM69A5000-C380	GM69X0010-C380
2.50	15.0	GM73A2000-C380	GM73A3000-C380	GM73A5000-C380	GM73X0010-C380
2.50	20.0	GM74A2000-C380	GM74A3000-C380	GM74A5000-C380	GM74X0010-C380
2.50	25.0	GM75A2000-C380	GM75A3000-C380	GM75A5000-C380	GM75X0010-C380
2.50	30.0	GM76A2000-C380	GM76A3000-C380	GM76A5000-C380	GM76X0010-C380
2.50	35.0	GM77A2000-C380	GM77A3000-C380	GM77A5000-C380	GM77X0010-C380
2.50	40.0	GM78A2000-C380	GM78A3000-C380	GM78A5000-C380	GM78X0010-C380
2.50	45.0	GM79A2000-C380	GM79A3000-C380	GM79A5000-C380	GM79X0010-C380
3.00	20.0	GM94A2000-C380	GM94A3000-C380	GM94A5000-C380	GM94X0010-C380
3.00	25.0	GM95A2000-C380	GM95A3000-C380	GM95A5000-C380	GM95X0010-C380
3.00	30.0	GM96A2000-C380	GM96A3000-C380	GM96A5000-C380	GM96X0010-C380
4.00	15.0	GML2A2000-C380	GML2A3000-C380	GML2A5000-C380	GML2X0010-C380
4.00	20.0	GML3A2000-C380	GML3A3000-C380	GML3A5000-C380	GML3X0010-C380
4.00	25.0	GM98A2000-C380	GM98A3000-C380	GM98A5000-C380	GM98X0010-C380
4.00	30.0	GML5A2000-C380	GML5A3000-C380	GML5A5000-C380	GML5X0010-C380
4.00	40.0	GML7A2000-C380	GML7A3000-C380	GML7A5000-C380	GML7X0010-C380
4.00	50.0	GML9A2000-C380	GML9A3000-C380	GML9A5000-C380	GML9X0010-C380

Standard available grades: C380 and C480. Replace material code to C480, for example: GM73X0010-C480.
Strip with a thickness of 2.50mm is coiled with an outer diameter of 300mm, 3 and 4mm is coiled with a diameter of 700mm.

INSTALLATION RECOMMENDATION

In order to protect the seal and guide system against ingress of foreign particles, we recommend the use of Turcite® Slydring® in combination with Orkot® Slydring® . The larger face area of these rings (Series GP99 from Table 188) embeds the contaminant particles, when present in the system, and keeps them away from the actual guides and seals (Figure 217). Reducing the piston diameter at both ends allows the particles to become embedded on the face side.

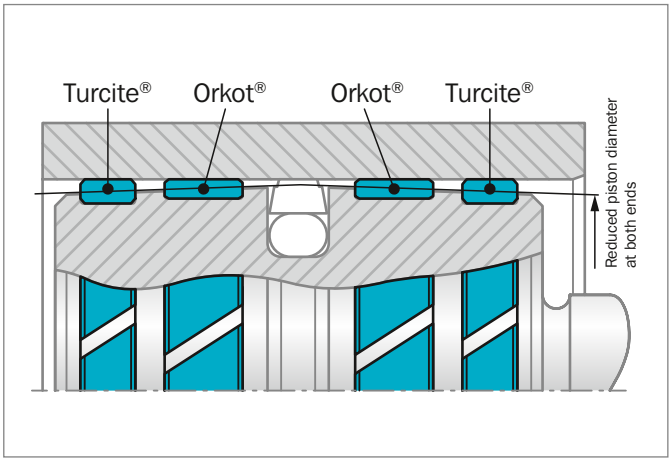

Figure 217: Arrangement of the Slydring® on the piston

Installation Recommendation, Orkot® Slydring® for Piston According to ISO 10766 Groove Dimension

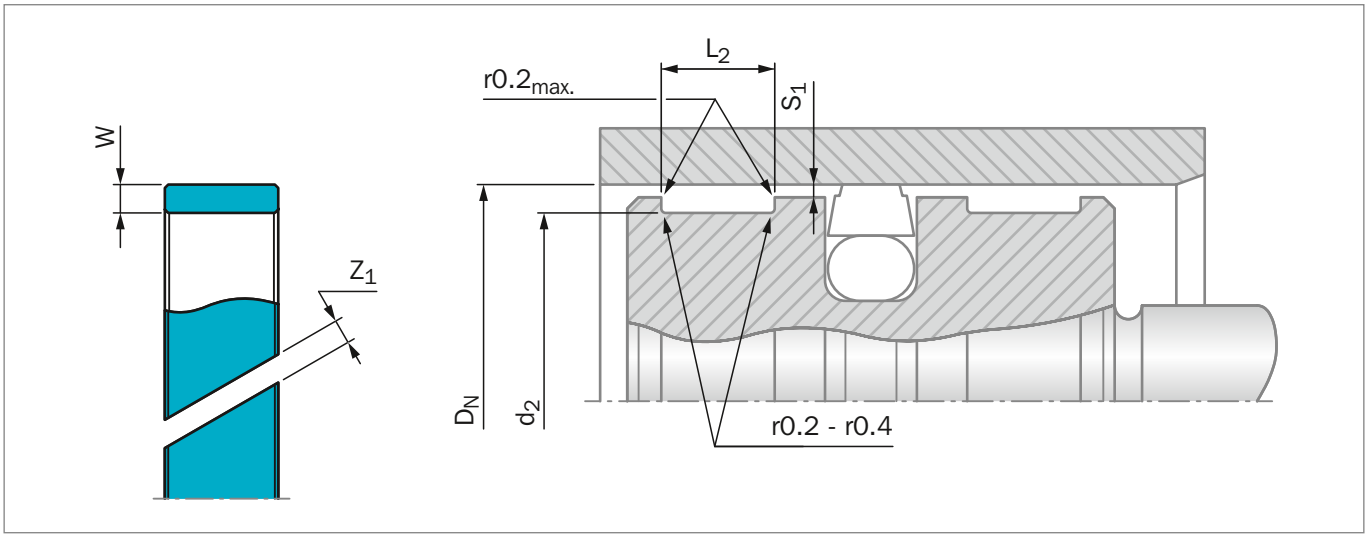

Figure 218: Installation Drawing

Table 225: Installation Dimensions

Serial No.	Bore Diameter*	Groove Diameter	Groove Width	Ring Thickness	Ring Gap**
	D_N H9	d_2 h8	L_2 +0.2	W	Z_1
GP43	16 - 50.0	D_N - 3.10	4.00	1.55	1 - 3
GP65	16 - 125.0	D_N - 5.00	5.60	2.50	2 - 6
GP69	25 - 250.0	D_N - 5.00	9.70	2.50	2 - 9
GP73	80 - 500.0	D_N - 5.00	15.00	2.50	4 - 17
GP75	125 - 999.9	D_N - 5.00	25.00	2.50	6 - 33
GP75X	1000 - 1500.0	D_N - 5.00	25.00	2.50	33 - 48
GP98	280 - 999.9	D_N - 8.00	25.00	4.00	10 - 33
GP98X	1000 - 1500.0	D_N - 8.00	25.00	4.00	33 - 48

* Recommended diameter ranges.
** see Figure 219

For Slydring® to other standards, for example French standard NF E 48-037, please contact your local TSS Marketing Company.

RADIAL CLEARANCE S_1

The minimum radial gap is calculated taking into account:

- The fitting tolerances of the hardware
- The tolerance on the ring thickness
- An allowance for wear
- In case of high radial loads an allowance for elastic deformation
- A safety margin to avoid metal-to-metal contact

The gaps S_1 can be chosen larger than near to the seal (attention: take care of gap dimension for the seal) thus allowing slight tilting of the piston, still without metal-to-metal contact.
It also allows foreign particles to be wiped away by the Slydring® rather than being squeezed between the metal components. The slot 'Z_1' allows fluid to pass across the ring thus preventing fluid pressure build-up which might cause extrusion of the guide ring. To ensure the ring cannot escape out of the groove it is recommended to observe the following radial gap sizes as maximum values:

- 0.50 mm for GP43 (1.55 mm thickness)
- 0.90 mm for GP65 to GP75 (2.50 mm thickness)
- 1.50 mm for GP98 and GP98X (4.00 mm thickness)

Table 226: Recommended Radii for Groove Diameter

D_N	r_{max}
8 - 250	0.2
> 250	0.4

Table 227: Surface Roughness

Parameter	Mating Surface µm	Groove Surface µm
R_{max}	1.00 - 4.00	< 16.0
R_z	0.63 - 2.50	< 10.0
R_a	0.10 - 0.40	< 2.5

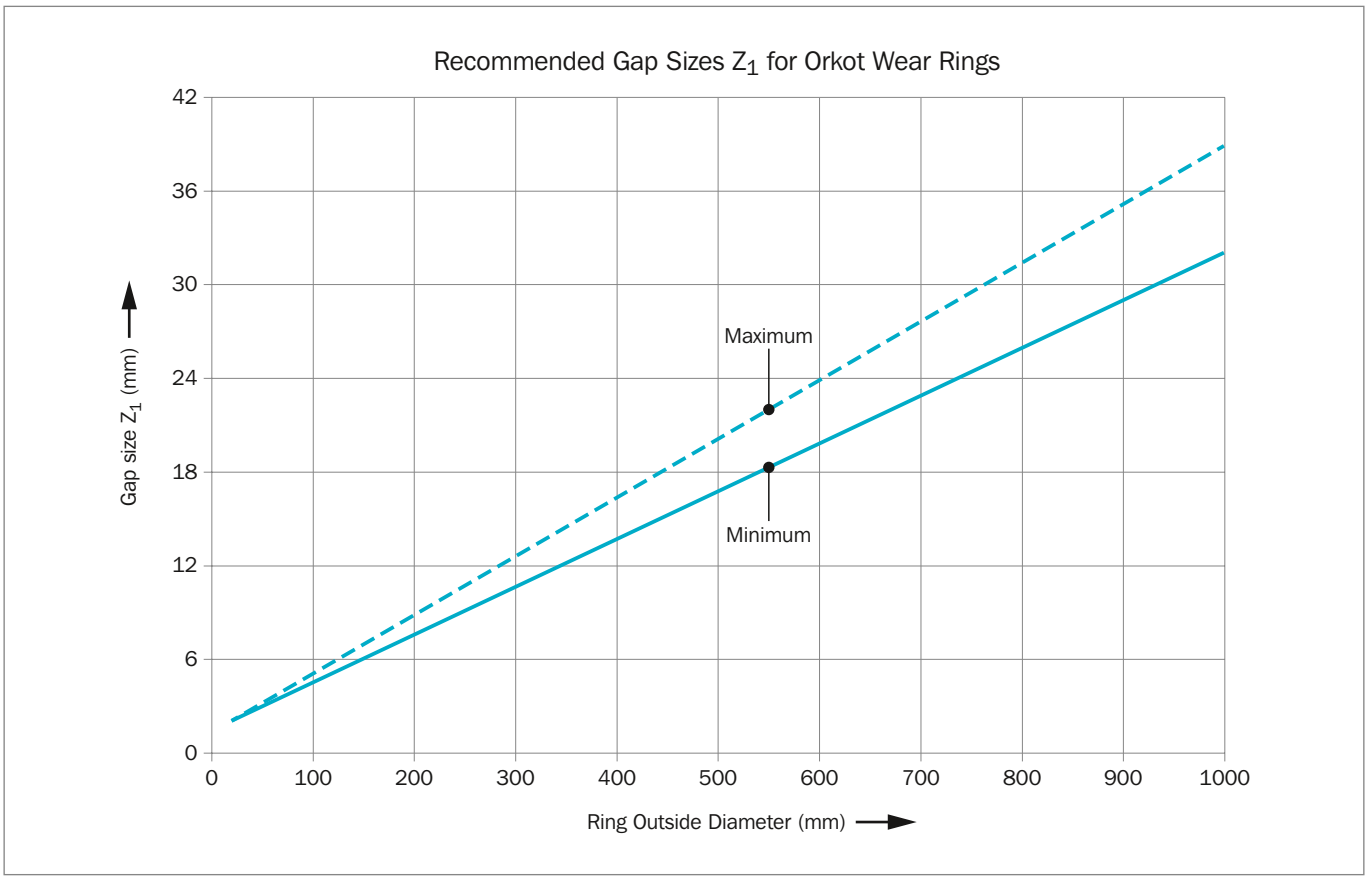

Figure 219: Recommended Gap Sizes Z_1 for Orkot Wear Ring

ORDERING EXAMPLE

Slydring® for bore diameter D_N = 100.0 mm
Series GP69 from Table 225

Groove Width:	9.70 mm
Ring Thickness:	2.50 mm
Material:	Orkot® C380 other materials see Table 185
Standard Design:	With angle cut Design code: 0
TSS Part No.:	GP6901000 from Table 228

TSS Article No. **GR69 0 0630 - C380**

- TSS Series No. — GR69
- Design Code (Standard) — 0
- Rod Diameter x 10 — 0630
- Quality Index (Standard) — -
- Material No. — C380

ORDERING EXAMPLE FOR DIAMETRER > 1000 MM

Slydring® for bore diameter D_N = 1200.0 mm
Series GP75X from Table 225

Groove Width:	25.00 mm
Ring Thickness:	2.50 mm
Material:	Orkot® C380 other materials see Table 185
Standard Design:	With angle cut Design code: X
TSS Part No.:	GP75X1200 from Table 228

TSS Article No. **GP75 X 1200 - C380**

- TSS Series No. — GP75
- Design Code — X
- Bore Diameter x 1* — 1200
- Quality Index (Standard) — -
- Material No. — C380

* For diameters ≥ 1000 mm multiply only by factor 1.

Please Note
Orkot® Slydring® for pistons can be used as rod guide ring, taking in account that the part number references the piston or rod diameter.

Example:
GP69 0 1000 - C380
is identical and can be replaced with
GR69 0 0950 - C380

Table 228: Slydring® for Piston

Dimensions				TSS Part No.
Bore Diameter	Groove Diameter	Groove Width	Thickness	
D_N H9	d_2 h8	L_2 +0.2	W	
16.0	**11.0**	**5.6**	**2.50**	**GP6500160**
18.0	13.0	5.6	2.50	GP6500180
20.0	**15.0**	**5.6**	**2.50**	**GP6500200**
22.0	17.0	5.6	2.50	GP6500220
25.0	**20.0**	**5.6**	**2.50**	**GP6500250**
25.0	20.0	9.7	2.50	GP6900250

Dimensions				TSS Part No.
Bore Diameter	Groove Diameter	Groove Width	Thickness	
D_N H9	d_2 h8	L_2 +0.2	W	
27.0	22.0	5.6	2.50	GP6500270
28.0	23.0	5.6	2.50	GP6500280
30.0	25.0	9.7	2.50	GP6900300
32.0	28.9	4.0	1.55	GP4300320
32.0	**27.0**	**5.6**	**2.50**	**GP6500320**
32.0	**27.0**	**9.7**	**2.50**	**GP6900320**
33.0	28.0	5.6	2.50	GP6500330
35.0	30.0	5.6	2.50	GP6500350
35.0	30.0	9.7	2.50	GP6900350
36.0	31.0	5.6	2.50	GP6500360
36.0	31.0	9.7	2.50	GP6900360
37.0	32.0	9.7	2.50	GP6900370
40.0	**36.9**	**4.0**	**1.55**	**GP4300400**
40.0	**35.0**	**5.6**	**2.50**	**GP6500400**
40.0	35.0	9.7	2.50	GP6900400
41.0	36.0	5.6	2.50	GP6500410
41.0	36.0	9.7	2.50	GP6900410
42.0	37.0	5.6	2.50	GP6500420
44.0	39.0	5.6	2.50	GP6500440
45.0	40.0	5.6	2.50	GP6500450
45.0	40.0	9.7	2.50	GP6900450
46.0	41.0	9.7	2.50	GP6900460
48.0	43.0	5.6	2.50	GP6500480
50.0	**45.0**	**5.6**	**2.50**	**GP6500500**
50.0	45.0	9.7	2.50	GP6900500
51.0	46.0	9.7	2.50	GP6900510
51.0	46.0	15.0	2.50	GP7300510
52.0	47.0	5.6	2.50	GP6500520
53.0	48.0	5.6	2.50	GP6500530
55.0	50.0	5.6	2.50	GP6500550
55.0	50.0	9.7	2.50	GP6900550
58.0	53.0	5.6	2.50	GP6500580
60.0	55.0	5.6	2.50	GP6500600
60.0	55.0	9.7	2.50	GP6900600
61.0	56.0	5.6	2.50	GP6500610
62.0	57.0	5.6	2.50	GP6500620
62.0	56.0	9.7	2.50	GP6900610
63.0	**58.0**	**5.6**	**2.50**	**GP6500630**
63.0	**58.0**	**9.7**	**2.50**	**GP6900630**
65.0	60.0	5.6	2.50	GP6500650

Dimensions				TSS Part No.
Bore Diameter	Groove Diameter	Groove Width	Thickness	
D_N H9	d_2 h8	L_2 +0.2	W	
65.0	60.0	9.7	2.50	GP6900650
68.0	63.0	5.6	2.50	GP6500680
68.0	63.0	9.7	2.50	GP6900680
70.0	65.0	5.6	2.50	GP6500700
70.0	65.0	9.7	2.50	GP6900700
74.0	69.0	5.6	2.50	GP6500740
75.0	70.0	5.6	2.50	GP6500750
75.0	70.0	9.7	2.50	GP6900750
80.0	**75.0**	**5.6**	**2.50**	**GP6500800**
80.0	**75.0**	**9.7**	**2.50**	**GP6900800**
80.0	**75.0**	**25.0**	**2.50**	**GP7500800**
85.0	80.0	5.6	2.50	GP6500850
85.0	80.0	9.7	2.50	GP6900850
90.0	85.0	5.6	2.50	GP6500900
90.0	85.0	9.7	2.50	GP6900900
95.0	90.0	5.6	2.50	GP6500950
95.0	90.0	9.7	2.50	GP6900950
100.0	**95.0**	**5.6**	**2.50**	**GP6501000**
100.0	**95.0**	**9.7**	**2.50**	**GP6901000**
100.0	**95.0**	**15.0**	**2.50**	**GP7301000**
100.0	**95.0**	**25.0**	**2.50**	**GP7501000**
105.0	100.0	5.6	2.50	GP6501050
105.0	100.0	9.7	2.50	GP6901050
110.0	105.0	9.7	2.50	GP6901100
115.0	110.0	9.7	2.50	GP6901150
120.0	115.0	9.7	2.50	GP6901200
120.0	115.0	15.0	2.50	GP7301200
125.0	**120.0**	**5.6**	**2.50**	**GP6501250**
125.0	**120.0**	**9.7**	**2.50**	**GP6901250**
125.0	**120.0**	**15.0**	**2.50**	**GP7301250**
125.0	**120.0**	**25.0**	**2.50**	**GP7501250**
130.0	125.0	9.7	2.50	GP6901300
130.0	125.0	15.0	2.50	GP7301300
135.0	130.0	9.7	2.50	GP6901350
135.0	130.0	15.0	2.50	GP7301350
140.0	**135.0**	**9.7**	**2.50**	**GP6901400**
140.0	**135.0**	**15.0**	**2.50**	**GP7301400**
140.0	**135.0**	**25.0**	**2.50**	**GP7501400**
145.0	140.0	25.0	2.50	GP7501450
150.0	145.0	9.7	2.50	GP6901500

Dimensions				TSS Part No.
Bore Diameter	Groove Diameter	Groove Width	Thickness	
D_N H9	d_2 h8	L_2 +0.2	W	
150.0	145.0	15.0	2.50	GP7301500
150.0	145.0	25.0	2.50	GP7501500
160.0	**155.0**	**9.7**	**2.50**	**GP6901600**
160.0	**155.0**	**15.0**	**2.50**	**GP7301600**
170.0	165.0	15.0	2.50	GP7301700
175.0	170.0	25.0	2.50	GP7501750
180.0	**175.0**	**9.7**	**2.50**	**GP6901800**
180.0	**175.0**	**15.0**	**2.50**	**GP7301800**
180.0	175.0	25.0	2.50	GP7501800
190.0	185.0	9.7	2.50	GP6901900
190.0	185.0	15.0	2.50	GP7301900
200.0	**195.0**	**9.7**	**2.50**	**GP6902000**
200.0	**195.0**	**15.0**	**2.50**	**GP7302000**
200.0	195.0	25.0	2.50	GP7502000
205.0	200.0	15.0	2.50	GP7302050
210.0	205.0	15.0	2.50	GP7302100
220.0	**215.0**	**9.7**	**2.50**	**GP6902200**
220.0	**215.0**	**15.0**	**2.50**	**GP7302200**
220.0	215.0	25.0	2.50	GP7502200
230.0	225.0	9.7	2.50	GP6902300
230.0	225.0	15.0	2.50	GP7302300
230.0	225.0	25.0	2.50	GP7502300
240.0	235.0	9.7	2.50	GP6902400
240.0	235.0	15.0	2.50	GP7302400
240.0	235.0	25.0	2.50	GP7502400
250.0	**245.0**	**9.7**	**2.50**	**GP6902500**
250.0	**245.0**	**15.0**	**2.50**	**GP7302500**
250.0	245.0	25.0	2.50	GP7502500
270.0	265.0	25.0	2.50	GP7502600
280.0	275.0	9.7	2.50	GP6902800
280.0	**275.0**	**15.0**	**2.50**	**GP7302800**
280.0	**272.0**	**25.0**	**4.00**	**GP9802800**
300.0	295.0	15.0	2.50	GP7303000
300.0	295.0	25.0	2.50	GP7503000
300.0	292.0	25.0	4.00	GP9803000
310.0	302.0	25.0	4.00	GP9803100
320.0	**315.0**	**15.0**	**2.50**	**GP7303200**
320.0	**315.0**	**25.0**	**2.50**	**GP7503200**
320.0	**312.0**	**25.0**	**4.00**	**GP9803200**
340.0	335.0	25.0	2.50	GP7503400

Dimensions				TSS Part No.
Bore Diameter	Groove Diameter	Groove Width	Thickness	
D_N H9	d_2 h8	L_2 +0.2	W	
340.0	332.0	25.0	4.00	GP9803400
350.0	345.0	25.0	2.50	GP7503500
360.0	**355.0**	**15.0**	**2.50**	**GP7303600**
360.0	**355.0**	**25.0**	**2.50**	**GP7503600**
360.0	**352.0**	**25.0**	**4.00**	**GP9803600**
400.0	**395.0**	**15.0**	**2.50**	**GP7304000**
400.0	**395.0**	**25.0**	**2.50**	**GP7504000**
400.0	**392.0**	**25.0**	**4.00**	**GP9804000**
420.0	415.0	25.0	2.50	GP7504200
440.0	432.0	25.0	4.00	GP9804400
450.0	**445.0**	**15.0**	**2.50**	**GP7304500**
450.0	**445.0**	**25.0**	**2.50**	**GP7504500**
450.0	**442.0**	**25.0**	**4.00**	**GP9804500**
500.0	**495.0**	**15.0**	**2.50**	**GP7305000**
500.0	**495.0**	**25.0**	**2.50**	**GP7505000**
500.0	**492.0**	**25.0**	**4.00**	**GP9805000**
600.0	595.0	25.0	2.50	GP7506000
600.0	592.0	25.0	4.00	GP9806000
700.0	692.0	25.0	4.00	GP9807000
1000.0	995.0	25.0	2.50	GP75X1000
1000.0	992.0	25.0	4.00	GP98X1000
1200.0	1195.0	25.0	2.50	GP75X1200
1500.0	1495.0	25.0	2.50	GP75X1500

All sizes printed in **bold** type conform to ISO 10766 and should be preferred for use.
Additional sizes not covered by this list are also held in stock. Also please note that customer specific sizes can be supplied without tooling costs.

Installation Recommendation, Orkot® Slydring® for Rod According to ISO 10766 Groove Dimension

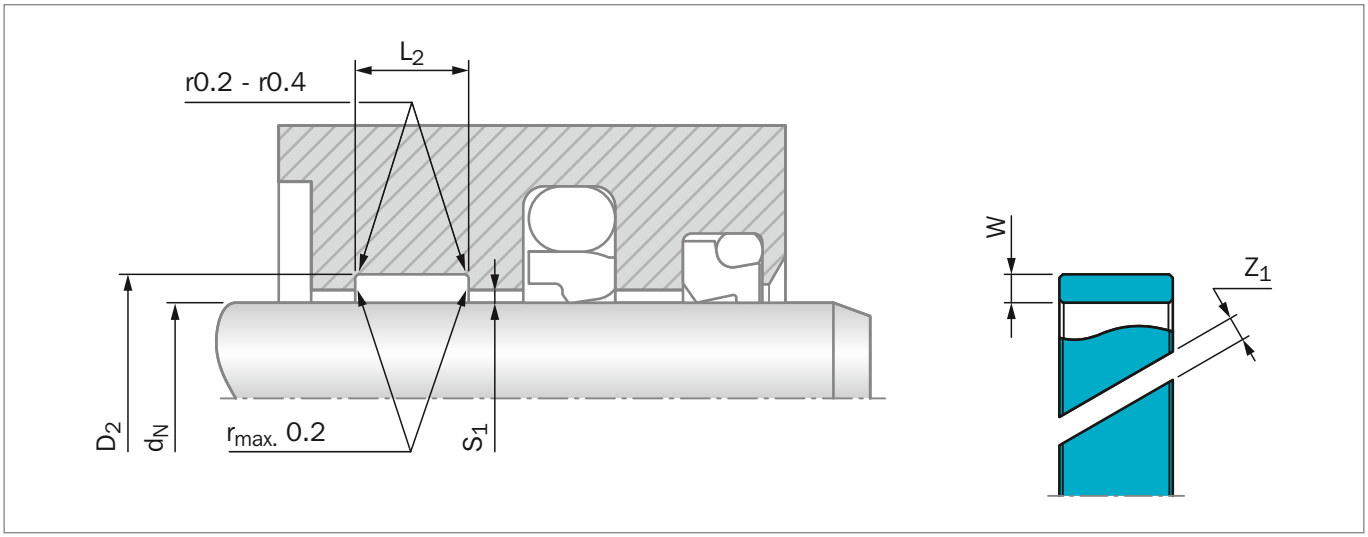

Figure 220: Installation Drawing

Table 229: Installation Dimensions

Serial No.	Rod Diameter*	Groove Diameter	Groove Width	Ring Thickness	Ring Gap**
	d_N f8/h9	D_2 H8	L_2 +0.2	W	Z_1
GR43	8 - 50.0	d_N + 3.10	4.00	1.55	1 - 3
GR65	16 - 120.0	d_N + 5.00	5.60	2.50	2 - 6
GR69	25 - 250.0	d_N + 5.00	9.70	2.50	2 - 9
GR73	75 - 500.0	d_N + 5.00	15.00	2.50	4 - 17
GR75	120 - 999.9	d_N + 5.00	25.00	2.50	5 - 33
GR75X	1000 - 1500.0	d_N + 5.00	25.00	2.50	33 - 49
GR98	280 - 999.9	d_N + 8.00	25.00	4.00	10 - 33
GR98X	1000 - 1500.0	d_N + 8.00	25.00	4.00	33 - 49

* Recommended diameter ranges.

** see Figure 221.

For Slydring® to other standards, for example French standard NF E 48-037, please contact your local Trelleborg Sealing Solutions Marketing Company.

RADIAL CLEARANCE S_1

The minimum radial gap is to be calculated taking into account.

- The fitting tolerances of the hardware
- The tolerance on the ring thickness
- An allowance for wear
- In case of high radial loads, an allowance for elastic deformation
- A safety margin to avoid metal-to-metal contact

The gaps S_1 can be chosen larger than near to the seal (attention: take care of gap dimension for the seal) thus allowing slight bending of the rod, still without metal-to-metal contact.
It also allows foreign particles to be wiped away by the Slydring® rather than being squeezed between the metal components (see page 575). The slot "Z_1" allows fluid to pass across the ring thus preventing fluid pressure build-up which might cause extrusion of the guide ring. To ensure the ring cannot escape out of the groove, it is recommended to observe the following radial gap sizes as maximum values:

- 0.50 mm for GR43 (1.55 mm thickness)
- 0.90 mm for GR65 to GR75 (2.50 mm thickness)
- 1.50 mm for GR98 and GR98X (4.00 mm thickness)

Table 230: Recommended Radii for Groove Diameter

d_N	r_{max}
8 - 250	0.2
> 250	0.4

Table 231: Surface Roughness

Parameter	Mating Surface µm	Groove Surface µm
R_{max}	1.00 - 4.00	< 16.0
R_z	0.63 - 2.50	< 10.0
R_a	0.10 - 0.40	< 2.5

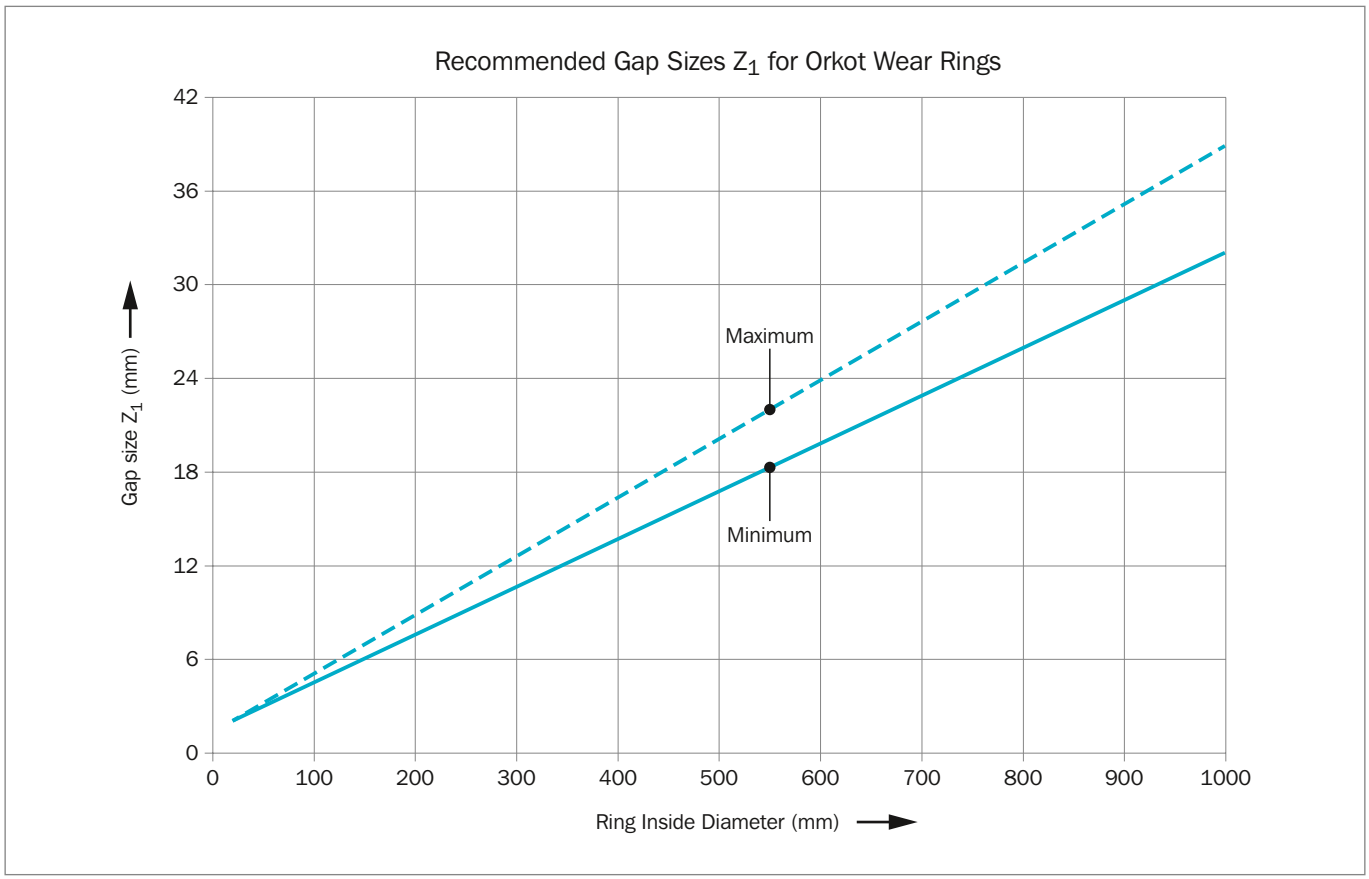

Figure 221: Recommended Gap Sizes Z_1 for Orkot Wear Ring

ORDERING EXAMPLE

Slydring® for rod diameter d_N = 63.0 mm
Series GR65 from Table 229

Groove Width:	5.60 mm
Ring Thickness:	2.50 mm
Material:	Orkot® C380 other materials see Table 185
Standard Design:	With angle cut Design code: 0
TSS Part No.:	GR6500630 from Table 232

TSS Article No. **GR65 0 0630 - C380**

- TSS Series No. — GR65
- Design Code (Standard) — 0
- Rod Diameter x 10 — 0630
- Quality Index (Standard) — -
- Material No. — C380

ORDERING EXAMPLE FOR DIAMETER > 1000 MM

Slydring® for rod diameter d_N = 1200.0 mm
Series GR75X from Table 229

Groove Width:	25.00 mm
Ring Thickness:	2.50 mm
Material:	Orkot® C380 other materials see Table 185
Standard Design:	With angle cut Design code: X
TSS Part No.:	GR75X1200 from Table 232

TSS Article No. **GR75 X 1200 - C380**

- TSS Series No. — GR75
- Design Code (Standard) — X
- Rod Diameter x 1* — 1200
- Quality Index (Standard) — -
- Material No. — C380

* For diameters ≥ 1000 mm multiply only by factor 1.

Please Note
Orkot® Slydring® for rods can be used as rod guide ring, taking in account that the part number references the piston or rod diameter.

Example:
GR65 0 0630 - C380
is identical and can be replaced with
GP69 0 0680 - C380

Table 232: Slydring® for Rod

Dimensions				TSS Part No.
Rod Diameter	Groove Diameter	Groove Width	Thickness	
d_N f8/h9	D_2 H8	L_2 +0.2	W	
11.0	14.1	4.0	1.55	GR4300110
15.0	18.1	4.0	1.55	GR4300150
16.0	21.0	5.6	2.50	GR6500160
18.0	23.0	5.6	2.50	GR6500180
20.0	25.0	5.6	2.50	GR6500200
20.0	25.0	9.7	2.50	GR6900200
22.0	27.0	5.6	2.50	GR6500220
25.0	**30.0**	**5.6**	**2.50**	**GR6500250**
25.0	30.0	9.7	2.50	GR6900250
27.0	32.0	9.7	2.50	GR6900270
28.0	**31.1**	**4.0**	**1.55**	**GR4300280**
28.0	**33.0**	**5.6**	**2.50**	**GR6500280**
28.0	33.0	9.7	2.50	GR6900280
30.0	35.0	5.6	2.50	GR6500300
30.0	35.0	9.7	2.50	GR6900300
32.0	**37.0**	**5.6**	**2.50**	**GR6500320**
32.0	**37.0**	**9.7**	**2.50**	**GR6900320**
35.0	40.0	9.7	2.50	GR6900350
36.0	**41.0**	**5.6**	**2.50**	**GR6500360**
36.0	**41.0**	**9.7**	**2.50**	**GR6900360**
36.0	41.0	15.0	2.50	GR7300360
40.0	**45.0**	**5.6**	**2.50**	**GR6500400**
40.0	**45.0**	**9.7**	**2.50**	**GR6900400**
40.0	45.0	15.0	2.50	GR7300400
40.0	**45.0**	**25.0**	**2.50**	**GR7500400**
42.0	47.0	5.6	2.50	GR6500420
43.0	48.0	5.6	2.50	GR6500430
45.0	**50.0**	**5.6**	**2.50**	**GR6500450**
45.0	**50.0**	**9.7**	**2.50**	**GR6900450**
45.0	50.0	15.0	2.50	GR7300450
48.0	53.0	5.6	2.50	GR6500480
48.0	53.0	9.7	2.50	GR6900480
50.0	**55.0**	**5.6**	**2.50**	**GR6500500**
50.0	**55.0**	**9.7**	**2.50**	**GR6900500**
50.0	55.0	15.0	2.50	GR7300500
52.0	57.0	5.6	2.50	GR6500520
52.0	57.0	9.7	2.50	GR6900520
55.0	60.0	9.7	2.50	GR6900550
55.0	60.0	15.0	2.50	GR7300550
55.0	60.0	25.0	2.50	GR7500550

Dimensions				TSS Part No.
Rod Diameter	Groove Diameter	Groove Width	Thickness	
d_N f8/h9	D_2 H8	L_2 +0.2	W	
56.0	**61.0**	**5.6**	**2.50**	**GR6500560**
56.0	**61.0**	**9.7**	**2.50**	**GR6900560**
56.0	**61.0**	**15.0**	**2.50**	**GR7300560**
58.0	63.0	5.6	2.50	GR6500580
58.0	63.0	9.7	2.50	GR6900580
60.0	65.0	5.6	2.50	GR6500600
60.0	65.0	9.7	2.50	GR6900600
60.0	65.0	15.0	2.50	GR7300600
60.0	65.0	25.0	2.50	GR7500600
63.0	**68.0**	**9.7**	**2.50**	**GR6900630**
63.0	68.0	15.0	2.50	GR7300630
65.0	70.0	5.6	2.50	GR6500650
65.0	70.0	9.7	2.50	GR6900650
65.0	70.0	15.0	2.50	GR7300650
70.0	**75.0**	**5.6**	**2.50**	**GR6500700**
70.0	**75.0**	**9.7**	**2.50**	**GR6900700**
70.0	75.0	15.0	2.50	GR7300700
70.0	**75.0**	**25.0**	**2.50**	**GR7500700**
75.0	80.0	5.6	2.50	GR6500750
75.0	80.0	9.7	2.50	GR6900750
75.0	80.0	15.0	2.50	GR7300750
80.0	85.0	5.6	2.50	GR6500800
80.0	**85.0**	**9.7**	**2.50**	**GR6900800**
80.0	**85.0**	**15.0**	**2.50**	**GR7300800**
80.0	**85.0**	**25.0**	**2.50**	**GR7500800**
85.0	90.0	9.7	2.50	GR6900850
85.0	90.0	15.0	2.50	GR7300850
90.0	95.0	5.6	2.50	GR6500900
90.0	**95.0**	**9.7**	**2.50**	**GR6900900**
90.0	**95.0**	**15.0**	**2.50**	**GR7300900**
90.0	95.0	25.0	2.50	GR7500900
95.0	100.0	5.6	2.50	GR6500950
95.0	100.0	9.7	2.50	GR6900950
95.0	100.0	15.0	2.50	GR7300950
100.0	105.0	5.6	2.50	GR6501000
100.0	**105.0**	**9.7**	**2.50**	**GR6901000**
100.0	**105.0**	**15.0**	**2.50**	**GR7301000**
100.0	105.0	25.0	2.50	GR7501000
105.0	110.0	15.0	2.50	GR7301050
105.0	110.0	25.0	2.50	GR7501050

Dimensions				TSS Part No.
Rod Diameter	Groove Diameter	Groove Width	Thickness	
d_N f8/h9	D_2 H8	L_2 +0.2	W	
110.0	**115.0**	**9.7**	**2.50**	**GR6901100**
110.0	**115.0**	**15.0**	**2.50**	**GR7301100**
110.0	115.0	25.0	2.50	GR7501100
115.0	120.0	9.7	2.50	GR6901150
115.0	120.0	15.0	2.50	GR7301150
120.0	125.0	15.0	2.50	GR7301200
125.0	**130.0**	**15.0**	**2.50**	**GR7301250**
125.0	130.0	25.0	2.50	GR7501250
130.0	135.0	15.0	2.50	GR7301300
140.0	**145.0**	**9.7**	**2.50**	**GR6901400**
140.0	**145.0**	**15.0**	**2.50**	**GR7301400**
140.0	145.0	25.0	2.50	GR7501400
150.0	155.0	15.0	2.50	GR7301500
150.0	155.0	25.0	2.50	GR7501500
155.0	160.0	15.0	2.50	GR7301550
155.0	160.0	25.0	2.50	GR7501550
160.0	**165.0**	**9.7**	**2.50**	**GR6901600**
160.0	**165.0**	**15.0**	**2.50**	**GR7301600**
160.0	**165.0**	**25.0**	**2.50**	**GR7501600**
170.0	175.0	15.0	2.50	GR7301700
170.0	175.0	25.0	2.50	GR7501700
180.0	**185.0**	**15.0**	**2.50**	**GR7301800**
190.0	195.0	15.0	2.50	GR7301900
190.0	195.0	25.0	2.50	GR7501900
200.0	**205.0**	**15.0**	**2.50**	**GR7302000**
200.0	**205.0**	**25.0**	**2.50**	**GR7502000**
200.0	**208.0**	**25.0**	**4.00**	**GR9802000**
210.0	215.0	15.0	2.50	GR7302100
220.0	**225.0**	**15.0**	**2.50**	**GR7302200**
220.0	**225.0**	**25.0**	**2.50**	**GR7502200**
230.0	235.0	25.0	2.50	GR7502300
240.0	245.0	25.0	2.50	GR7502400
240.0	248.0	25.0	4.00	GR9802400
250.0	**255.0**	**25.0**	**2.50**	**GR7502500**
270.0	275.0	15.0	2.50	GR7302700
280.0	**285.0**	**15.0**	**2.50**	**GR7302800**
280.0	**285.0**	**25.0**	**2.50**	**GR7502800**
280.0	**288.0**	**25.0**	**4.00**	**GR9802800**
300.0	305.0	25.0	2.50	GR7503000
320.0	**325.0**	**25.0**	**2.50**	**GR7503200**

Dimensions				TSS Part No.
Rod Diameter	Groove Diameter	Groove Width	Thickness	
d_N f8/h9	D_2 H8	L_2 +0.2	W	
320.0	**328.0**	**25.0**	**4.00**	**GR9803200**
350.0	355.0	25.0	2.50	GR7503500
360.0	**365.0**	**25.0**	**2.50**	**GR7503600**
360.0	**368.0**	**25.0**	**4.00**	**GR9803600**
400.0	405.0	25.0	2.50	GR7504000
400.0	408.0	25.0	4.00	GR9804000
800.0	805.0	25.0	2.50	GR7508000
800.0	808.0	25.0	4.00	GR9808000
1000.0	1005.0	25.0	2.50	GR75X1000
1000.0	1008.0	25.0	4.00	GR98X1000
1200.0	1205.0	25.0	2.50	GR75X1200
1500.0	1505.0	25.0	2.50	GR75X1500

All sizes printed in **bold** type conform to ISO 10766 and should be preferred for use.
Additional sizes not covered by this list are also held in stock. Also please note that customer specific sizes can be supplied without tooling costs.

LOCAL CONTACTS

EUROPE

Austria – Vienna (Slovenia)
+43 (0) 1 406 47 33
Belgium – Dion-Valmont (Luxembourg)
+32 (0) 10 22 57 50
Bulgaria – Sofia (Albania, Azerbaijan, Belarus, Bosnia and Herzegovina, Greece, Kosovo, Macedonia, Montenegro, Romania, Serbia, Ukraine)
+359 (0) 2 969 95 99
Croatia – Zagreb
+385 (0) 1 24 56 387
Czech Republic – Rakovnik (Slovakia)
+420 313 529 111
Denmark – Copenhagen
+45 48 22 80 80
Finland – Vantaa (Estonia, Latvia)
+358 (0) 207 12 13 50
France – Maisons-Laffitte
+33 (0) 1 30 86 56 00

Germany – Stuttgart
+49 (0) 711 7864 0
Hungary – Budaörs
+36 (06) 23 50 21 21
Italy – Livorno
+39 0586 22 6111
The Netherlands – Rotterdam
+31 (0) 10 29 22 111
Norway – Oslo
+47 22 64 60 80
Poland – Warsaw (Lithuania)
+48 (0) 22 863 30 11
Russia – Moscow
+7 495 627 57 22
Spain – Madrid (Portugal)
+34 (0) 91 71057 30
Sweden – Jönköping
+46 (0) 36 34 15 00

Switzerland – Crissier
+41 (0) 21 631 41 11
Turkey – Istanbul
+90 216 569 73 00
United Kingdom – Solihull (Eire)
+44 (0) 121 744 1221

Aerospace Hub Europe, North
(UK and Nordic Countries)
+44 (0) 121 744 1221
Aerospace Hub Europe, South & West
(Continental Europe and Middle East)
+33 (0) 1 30 86 56 00
Automotive Hub Europe
+49 (0) 711 7864 0

AMERICAS

Americas Regional
+1 260 749 9631
Brazil – São José dos Campos
+55 12 3932 7600
Canada Central – Etobicoke, ON
+1 416 213 9444
Canada East – Montreal, QC
+1 514 284 1114
Canada West – Langley, BC
+1 604 539 0098
Mexico – Mexico City
+52 55 57 19 50 05

USA, Great Lakes – Fort Wayne, IN
+1 260 482 4050
USA, East – Mt. Juliet, TN
+1 615 800 8340
USA, Midwest – Schaumburg, IL
+1 630 539 5500
USA, Northern California – Fresno, CA
+1 559 449 6070
USA, Northwest – Portland, OR
+1 503 595 6565
USA, Southwest – Houston, TX
+1 713 461 3495

Aerospace Hub Airframe
+1 303 469 1357
Aerospace Hub Distribution & Engineering
+1 260 749 9631
Aerospace Hub East
+1 610 828 3209
Aerospace Hub West
+1 310 371 1025
Automotive Hub North America
+1 734 354 1250
Automotive Hub South America
+55 12 3932 7600

ASIA PACIFIC

Asia Pacific Regional
+65 6 577 1778
China – Hong Kong
+852 2366 9165
China – Shanghai
+86 (0) 21 6145 1830
India – Bangalore
+91 (0) 80 3372 9000
Japan – Tokyo
+81 (0) 3 5633 8008
Korea – Seoul
+82 (0) 2 761 3471

Malaysia – Kuala Lumpur
+60 (0) 3 90549266
Taiwan – Taichung
+886 4 2382 8886
Vietnam – Ho Chi Minh City
+84 8 6288 6407
Singapore and all other countries in South and East Asia, Australasia
+65 6 577 1778

Aerospace Hub China
+86 (0) 21 6145 1830
Aerospace Hub Singapore
+65 6 577 1778
Automotive Hub China
+86 (0) 21 6145 1830
Automotive Hub India
+91 (0) 80 3372 9200

AFRICA, CENTRAL ASIA AND MIDDLE EAST

Details available at **www.tss.trelleborg.com**

TRELLEBORG

Trelleborg is a world leader in engineered polymer solutions that seal, damp and protect critical applications in demanding environments. Its innovative engineered solutions accelerate performance for customers in a sustainable way. The Trelleborg Group has local presence in over 40 countries around the world.

facebook.com/TrelleborgSealingSolutions
twitter.com/TrelleborgSeals
youtube.com/TrelleborgSeals
linkedin.com/company/trelleborg-sealing-solutions

WWW.TSS.TRELLEBORG.COM

99GBGOCAT0117